CROWNLINE®

Owner's/Operator's Manual

WELCOME

Thank you for choosing CROWNLINE as your choice for the ultimate boating experience for you and your family. Every CROWNLINE boat is built with painstaking detail in order to provide its owner or operator with the maximum comfort, convenience and operating efficiency possible. Our boats are built to assure that they are of the very best quality and value in the industry.

We build our boats for long-lasting, trouble-free enjoyment so that boaters can travel in carefree style and convenience. It's what we do. All of us at Crownline are passionately committed to your boating satisfaction.

To enhance your boating pleasure and safety, read this manual and the Engine Operation and Maintenance Manual. Then, keep them in a safe place onboard for easy reference.

We have designed this manual to inform you about the operating features and maintenance of your boat and to provide information about safe boating. Please pay particular attention to the safety statements labeled as **DANGER**, **WARNING**, **CAUTION**, **NOTE** and **IMPORTANT**. These statements alert you to avoid possible safety hazards so that you may have a safe and pleasurable boating experience. Preparation is the key to a safe and enjoyable boating experience. It is very important to us that you enjoy many years of boating in your CROWNLINE boat.

We know that our customers and owners have brought us to where we are today, and they are the ones who will keep us here. Have a safe and happy time on the water in your CROWNLINE boat!

WELCOME ABOARD!

We're sure that you will be completely satisfied with the unmatched performance, style and luxury of your new CROWNLINE whether you are the first owner or the second.

Your new CROWNLINE has been designed, assembled and tested to give you the maximum in boating enjoyment and safety. CROWNLINE is proud to say that every boat we build is carefully constructed by skilled craftsmen to meet or exceed all safety and quality standards established by the U.S. Coast Guard, ABYC or ISO where applicable.

TABLE OF CONTENTS

GENERAL INFORMATION 1-1
Welcome 1-1
Welcome Aboard! 1-1
Your Crownline Owner's/Operator's Manual 1-5
Your Crownline Dealer Responsibilities 1-6
Your Responsibilities 1-6
2007-Limited Warranty 1-8
Serial Numbers 1-17
Intended Use 1-17
Craft Design Category 1-17
Publications 1-17
Nautical Glossary 1-18
Certification and Specification 1-22
Modifications Prohibited 1-22
Craft Information Sheet 1-23
Float Plan 1-24
Travel Log 1-25
Restricted Areas 1-26
Proposition 65 1-26
Emission Control Warranty Information 1-26
Product Improvement 1-27
Vendor Supplier List 1-28
BOATING SAFETY 2-1
Safety Awareness 2-1
Safety On-board 2-1
Safe Boating Instruction 2-2
Safe Boating Practices 2-2
Rules of the Road 2-4
Warning Markers 2-4
Operating Under the Influence 2-5
Rendering Assistance 2-5
Fires 2-5
Capsizing and Swamping 2-7
Water Sports 2-7
Safety Recommendations 2-9
Weather 2-13
Man Overboard 2-16
Hazardous Conditions 2-16
Emergency Conditions 2-17
Aids to Navigation 2-17
Right-of-Way 2-21
Safety Equipment 2-25

BOAT HANDLING AND OPERATION 3-1
Overloading 3-1
Passenger Safety 3-1
Visibility 3-1
Trailering 3-2
Launching 3-5
Loading 3-7
Fueling 3-9
Getting Underway 3-11
Helms, Instrumentations and Controls 3-12
Instrumentations and Controls 3-22
Throttle and Gear Shift Controls 3-30
Steering 3-30
Battery 3-31
Start-up 3-32
Carbon Monoxide 3-34
Acceleration 3-36
High-Speed Operation 3-37
Drive Trim Angle 3-37
Trim Tabs 3-38
Mooring Lines 3-40
Canvas 3-42
Waste Disposal 3-45
SYSTEMS AND COMPONENTS 4-1
Fuel System 4-1
Fuel Tank Selector 4-3
Electrical Systems 4-5
Anticorrosion System 4-8
Fire-Prevention Systems (Optional) 4-9
Hand Portable Fire Extinguisher 4-10
Freshwater System (Cruisers) 4-10
Sanitizing Freshwater System 4-11
City Water Hookup 4-13
Components 4-14
Marine Sanitation Device (MSD) 4-17
Holding Tank 4-19
Overboard Discharge 4-20
Running/Navigation Lights 4-20
Stereo and Entertainment 4-20
Refrigerator/Freezer 4-21
Stove (Cabin Models Only) 4-21
Air Conditioning System 4-21
GENERAL CARE AND MAINTENANCE 5-1
Special Cleaning Problems 5-2
Interior Care 5-3

Exterior Care 5-4
Gelcoat Maintenance 5-4
Stainless Steel and Chrome 5-7
Windshield and Portals 5-8
Corrosion Protection 5-8
Engine Compartment 5-9
Galvanic Corrosion 5-10
Salt Water 5-10
Canvas 5-10
General Maintenance 5-12
Troubleshooting Chart 5-16
Extended Storage 5-22
Lifting the Craft 5-23
Prior to Storage 5-24
Engine 5-25
Air Conditioner 5-26
Freshwater System 5-27
Marine Sanitation Device (MSD) 5-27
Recommission to Service 5-27
SPECIFICATIONS 6-1
Boat Specifications 6-2

YOUR CROWNLINE OWNER'S/OPERATOR'S MANUAL

This manual has been compiled to help you and others operate your CROWNLINE boat safely and pleasurably. It contains details of the craft, the equipment it is supplied or fitted with, its systems, and information on its operation and maintenance. **Read the manual carefully, and familiarize yourself with the craft before using it.** Other publications may also be included to support components not covered in this manual. Become familiar with all the publications included with your boat; they too will have important information.

If this is your first craft, or you are changing to a type of craft you are not familiar with, for your own safety and comfort, make sure you obtain handling and operating experience before "assuming command" of the craft. Your dealer, national boating federation or yacht club will be pleased to advise you of local sea schools or competent instructors.

Your CROWNLINE Owner's/Operator's Manual provides an overview of systems and components on your boat. Additional information can be found in the supplied manufacturer's publications, boating reference books (available at various bookstores) or at the local library.

Not all equipment described in this manual is available on all models. See your dealer for equipment availability.

The following outline provides you a glimpse of the information that can be easily found in your CROWNLINE Owner's/Operator's Manual:

GENERAL INFORMATION: introduces you to CROWNLINE Boats, Inc., your Owner's/Operator's Manual and general information on responsibilities. It also includes a list of boating terminology. For more detailed information, general reference books are available from your CROWNLINE dealer.

BOATING SAFETY: includes important information to provide a good foundation for safe boating practices. Safety notices are also located throughout your Owner's/Operator's Manual to protect operators, passengers and people around the boating environment.

BOAT HANDLING AND OPERATION: covers normal, everyday boating techniques and procedures.

SYSTEMS AND COMPONENTS: provides an overview of the various systems and components on your CROWNLINE. Remember, this section is not intended to replace any of the supplied manufacturers' publications.

GENERAL CARE AND MAINTENANCE: tells you how to properly maintain your CROWNLINE. Included in each sub-section are recommendations for keeping your boat's beauty and its sound operational condition, adjustments, and frequency of checks and inspections. Also included is a troubleshooting chart to help find the source of any problems. **Extended Storage** explains procedures for keeping your CROWNLINE in good condition during seasonal or prolonged storage situations.

SPECIFICATIONS: provides specifications by model.

YOUR CROWNLINE DEALER RESPONSIBILITIES

The following outlines the responsibilities of your CROWNLINE dealer to ensure you receive maximum performance and enjoyment from your new CROWNLINE.

Your CROWNLINE dealer will be responsible for:

1. Discussing the terms of all warranties, and stressing the importance of registering each warranty with its respective manufacturer. Complete and return the CROWNLINE Boats, Inc. Limited Warranty registration card.
2. Providing instructions on how to get warranty service.
3. Reviewing the pre-delivery service record with you, and then signing it to certify it is correct.
4. Ensuring you know the general operating procedures for your boat, and you are familiar with its specific systems and components.

YOUR RESPONSIBILITIES

The following outlines your responsibilities.

As the owner you are responsible for:

1. Scheduling an appointment with your dealer to review all warranties.
2. Inspecting the physical condition of the boat at time of delivery, and making sure that all systems and components are operating properly.
3. Scheduling an appointment with your dealer to review the pre-delivery engine service record, then signing it to indicate the dealer has provided a complete explanation.
4. Using all equipment safely and in accordance with the manufacturer's instructions.
5. Providing periodic maintenance as outlined in the CROWNLINE Owner's/Operator's Manual and all manufacturer Service Guides.

NOTE: CROWNLINE recommends you refer to your engine warranty for initial inspection and service requirements.

6. Scheduling your engine's service as detailed in the engine owner's manual.

IMPORTANT: Make sure the dealer checks the engine alignment in accordance with the engine operation and maintenance manual. If this is not done, drive train damage is possible, and is not covered by CROWNLINE Boats, Inc.

Registration

The U.S. Coast Guard requires that all power boats operated on the navigable waters of the United States must be registered in the state of main use; also, many states require registration in that state when boating on waters within their state boundary. Always contact your state boating authorities (and neighboring states) for registration information on boats and trailers. Also, your dealer may be able to assist you and supply you with the appropriate forms.

Insurance

You must get insurance before operating your CROWNLINE. Loss by fire, theft or other causes, or liability protection against accidents is a must for responsible boaters. Many states have laws detailing minimum insurance needs. Your insurance agent or your dealer may be able to supply you with more information.

2007-LIMITED WARRANTY

1. GENERALLY. Subject to all limitations and conditions explained below, CROWNLINE BOATS, INC. ("Crownline") warrants to the original retail purchaser ("PURCHASER") that Crownline, or a dealer of Crownline chosen in Crownline's sole discretion, will repair or replace those parts and components described in paragraphs 2, 3, 4, 5 and 6 below found to be defective in factory materials or workmanship during the applicable warranty periods set forth in such paragraphs. The PURCHASER'S right to the repair or replacement of items warranted hereunder shall be the PURCHASER'S sole and exclusive remedy against Crownline under this limited warranty.

2. LIFETIME LIMITED STRUCTURAL WARRANTY. Crownline warrants to the original retail purchaser of this boat that Crownline will pay all or a portion of the cost to repair or replace the fiberglass hull or deck if it is found to be structurally defective according to the following prorated schedule:

a. Up to five (5) years after date of original retail purchase: Crownline pays 100% of repair or replacement cost;

b. After five (5) years but up to six (6) years after date of original retail purchase: Crownline pays 90% of repair or replacement cost;

c. After six (6) years but up to seven (7) years after date of original retail purchase: Crownline pays 80% of repair or replacement cost;

d. After seven (7) years but up to eight (8) years after date of original retail purchase: Crownline pays 70% of repair or replacement cost;

e. After eight (8) years but up to nine (9) years after date of original retail purchase: Crownline pays 60% of repair or replacement cost;

f. After nine (9) years after date of original retail purchase and thereafter for so long as the original retail purchaser owns the boat: Crownline pays 50% of repair or replacement cost.

For purposes of this limited warranty: (i) a structural defect is defined as a defect that causes the hull or deck to be unsafe or unfit for use under normal operating conditions; (ii) the hull is defined as the single fiberglass molded shell and integral fiberglass structural components including stringers, transom and related structural components which are below the hull flange; and (iii) the deck is defined as the single fiberglass molded shell and integral fiberglass structural components above the hull flange.

This Lifetime Limited Structural Warranty shall be in effect for so long as the original retail purchaser owns the boat. All repairs and replacements under this Lifetime Limited Structural Warranty shall be performed by Crownline or a dealer of Crownline chosen in Crownline's sole discretion.

This Lifetime Limited Structural Warranty is further subject to all limitations and conditions explained below.

3. FIVE-YEAR TRANSFERABLE LIMITED STRUCTURAL WARRANTY. Crownline also offers to the first purchaser of this boat after the original retail purchaser a Transferable Limited Structural Warranty under which Crownline will pay 100% of the cost to repair or replace the fiberglass hull or deck if it is found to be structurally defective within five (5) years after the date of the original retail purchase of the boat.

All repairs and replacements under this Transferable Limited Structural Warranty shall be performed by Crownline or a dealer of Crownline chosen in Crownline's sole discretion. This Transferable Limited Structural Warranty is available to the first purchaser of the boat after the original retail purchaser (but to no other owner of the boat) provided the transfer of the boat occurs within five (5) years after the date of purchase by the original retail purchaser and the second purchaser registers the transfer with Crownline and pays the established warranty transfer fee in accordance with the requirements set forth below. To register the transfer, the second purchaser must acquire from the original retail purchaser the Transferable Warranty Registration stub, supply the information requested and mail it together with the required transfer fee payment to Crownline Boats, Inc., 11884 Country Club Road, West Frankfort, IL 62896. Crownline must receive the completed stub and payment within fifteen (15) days of purchase from the original retail purchaser. Proof of purchase date is required. Inquiries concerning the required transfer fee and unexpired term of warranty on a particular Crownline boat should be directed to Crownline's Customer Service Department at (618) 937-6426. The model, hull identification number and original retail purchaser's name will be needed to provide this information. As of June 1, 2004, the established warranty transfer fee is $500.00 for boats with hull lengths of less than 25' and $750.00 for boats will hull lengths of 25' or more, but Crownline may, in its sole discretion, revise such fees from time to time without prior notice.

This Transferable Limited Structural Warranty is further subject to all limitations and conditions explained below.

4. FIVE-YEAR LIMITED HULL BLISTER WARRANTY. Provided that the original factory gelcoat surface has not been altered, Crownline warrants to the original retail purchaser of this boat that for a period of five (5) years after the date of the original retail purchase Crownline will pay all or a portion of the cost to correct or repair any osmotic blisters which occur on the underwater gelcoated surfaces of the hull according to the following prorated schedule:

a. Up to two (2) years after date of original retail purchase: Crownline pays 100% of repair cost;

b. After two (2) years but up to three (3) years after date of original retail purchase: Crownline pays 80% of repair cost;

c. After three (3) years but up to four (4) years after date of original retail purchase: Crownline pays 60% of repair cost;

d. After four (4) years but up to five (5) years after date of original retail purchase: Crownline pays 30% of repair cost;

e. After five (5) years after date of original retail purchase: Crownline pays 0% of repair cost.

Alterations which will void this Five-Year Limited Hull Blister Warranty include, without limitation, damage, accident repair, sanding, scraping, sandblasting, or improper surface preparation for application of a marine barrier coating or bottom paint. A marine barrier coating must be properly applied to the hull bottom if the boat is to be mounted in water for periods of more than sixty (60) days in any ninety (90) day period and a marine barrier coating is also required if the boat is to be bottom painted (failure to take such actions in such circumstances will also void this Five-Year Limited Hull Blister Warranty). For purposes of determining coverage under this Five-Year Limited Hull Blister Warranty, osmotic blisters are defined as those blisters larger than 1/8” in diameter and with a depth of 1/16” or greater which occur on the hull below the water line. All repairs and replacements under this Five-Year Limited Hull Blister Warranty shall be performed by Crownline or a dealer of Crownline chosen in Crownline’s sole discretion. This Five-Year Limited Hull Blister Warranty is further subject to all limitations and conditions explained below.

In the event that the Transferable Limited Structural Warranty provided for in paragraph 3 above is transferred by the original retail purchaser of the boat to a subsequent purchaser within five (5) years after the date of the original retail purchase and the subsequent purchaser registers the transfer with Crownline and pays the established warranty transfer fee in accordance with the requirements set forth in paragraph 3, the remaining term of the foregoing Five-Year Limited Hull Blister Warranty shall also be transferred to the subsequent purchaser. This Five-Year Limited Hull Blister Warranty may be transferred one time only by the original retail purchaser to a subsequent purchaser.

5. EXTERIOR COSMETIC GELCOAT LIMITED WARRANTY. Crownline warrants to the original retail purchaser of this boat that Crownline will pay all or a portion of the cost to correct or repair any cracking, crazing or fading of the exterior gelcoat surface of the boat and of fiberglass options (such as radar arches) installed by Crownline at the factory according to the following prorated schedule:

a. Up to twelve (12) months after date of original retail purchase: Crownline pays 100% of repair cost;

b. After twelve (12) months but up to fifteen (15) months after date of original retail purchase: Crownline pays 50% of repair cost;

c. After fifteen (15) months but up to eighteen (18) months after date of original retail purchase: Crownline pays 25% of repair cost;

d. After Eighteen (18) months from date of original retail purchase: Crownline pays 0% of repair cost.

Crownline shall not, however, have any liability or responsibility to correct or repair any damage to the exterior gelcoat service of the boat under the following circumstances:

- If the original gelcoat surface has been altered in any way. Alterations which will void this Exterior Cosmetic Gelcoat Limited Warranty include, without limitation, damage, accident repair, sanding, scraping, sandblasting, or improper surface preparation for application of a marine barrier coating or paint.
- If damage to the exterior gelcoat surface results from or is attributable to the addition of items not installed by Crownline (such as but not limited to canvas and wakeboard towers) to the boat.

All repairs under this Exterior Cosmetic Gelcoat Limited Warranty shall be performed by Crownline or a dealer of Crownline chosen in Crownline's sole discretion. This Exterior Cosmetic Gelcoat Limited Warranty is further subject to all limitations and conditions explained below.

In the event that the Transferable Limited Structural Warranty provided for in paragraph 3 above is transferred by the original retail purchaser of the boat to a subsequent purchaser within eighteen (18) months after the date of the original retail purchase and the subsequent purchaser registers the transfer with Crownline and pays the established warranty transfer fee in accordance with the requirements set forth in paragraph 3, the remaining term of the foregoing Exterior Cosmetic Gelcoat Limited Warranty shall also be transferred to the subsequent purchaser. This Exterior Cosmetic Gelcoat Limited Warranty may be transferred one time only by the original retail purchaser to a subsequent purchaser.

6. CROWNLINE LIMITED WARRANTY FOR NON-STRUCTURAL PARTS AND COMPONENTS. In addition to the above hull warranties, Crownline warrants to the original retail purchaser that the following described non-structural parts and components of the boat will be free of defects in materials or workmanship for the periods indicated below, subject to all limitations and conditions contained herein:

Description of Component	Warranty Description
Gauges	Lifetime warranty against defects in materials or workmanship with a nominal fee for shipping and handling
Plywood (X-L Industrial Panels)	Lifetime warranty against defects in material or workmanship
Stainless Steel Rails, Cleats, Rub Rail Inserts, Thru-Hull Fittings, Boarding Ladders, Misc. Stainless Steel Hardware	Defects in materials or workmanship covered for a period of 5 years from date of original retail purchase
Structural and Suspension Components of Bucket Seats	Defects in materials or workmanship covered for a period of 5 years from date of original retail purchase
Generator	Defects in materials or workmanship covered for a period of 5 years from date of original retail purchase or 2000 hours of operation, whichever occurs first
All Factory Installed Upholstery, Canvas, and Vinyl Coverings	Defects in materials or workmanship (including seam separation and thread rot) covered for a period of 5 years from date of original retail purchase in accordance with the following prorated schedule: a. Up to 3 years after date of original retail purchase, Crownline pays 100% of repair or replacement cost. b. After 3 years, but up to 4 years after date of original retail purchase, Crownline pays 90% of repair or replacement cost. c. After 4 years, but up to 5 years after date of original retail purchase, Crownline pays 80% of repair or replacement cost.
Arch	Defects in materials or workmanship covered for a period of 3 years from date of original retail purchase
Carpeting	Guaranteed against failure or fading due to the effects of sunlight for a period of 3 years from date of original retail purchase
Shock Absorbers	Defects in materials or workmanship covered for a period of 2 years from date of original retail purchase
Trim Tabs	Defects in materials or workmanship covered for a period of 3 years from date of original retail purchase
Stereo System	Defects in materials or workmanship covered for a period of 1 year from date of original retail purchase
Towers	Defects in materials or workmanship covered for a period of 1 year from date of original retail purchase
Graphics	Defects in materials or workmanship covered for a period of 1 year from date of installation in boat

7. EXCLUSIONS FROM WARRANTY COVERAGE. The limited warranties of Crownline set forth in paragraphs 1 through 6 above do not apply to:

a. Engines, engine parts, outdrives, controls, propellers, instruments, fuel tanks, pumps, controls and any other equipment or boat accessory not manufactured by Crownline. Windshield damage or breakage is also excluded from Crownline's limited warranties.

b. Any fiberglass product not manufactured by Crownline.

c. Exterior gelcoat surfaces including, but not limited to, cracking, crazing, discoloration, blistering, chalking or fading, except only as provided in paragraphs 4 and 5 above.

d. Damage or effects of damage caused by the installation of engines, outdrives, propellers, instruments, fuel tanks, pumps, controls, generators, air conditioners, batteries and other equipment and accessories installed by anyone other than Crownline.

e. Any boat damaged by accident or damaged while being loaded onto, transported upon or unloaded from trailers, cradles, or other devices used to place boats in water, remove boats from water or store or transport boats on or over land.

f. Any boat which has been misused or altered, used in a negligent manner, used for racing, used for rental or commercial purposes, operated contrary to any instructions furnished by Crownline, or operated in violation of any federal, state, coast guard or other governmental agency laws, rules or regulations, or any boat that has been overloaded or overpowered, or damaged due to unusual attitudes or impact.

g. Normal wear, tear, deterioration (including rust) of hardware, vinyl coverings, vinyl and fabric upholstery, plastic, stainless steel and other metal, wood and trim tape.

h. Any defect caused by the failure of the boat owner to provide reasonable care and maintenance.

i. Water damage to, dry rot to, condensation to, or absorption by interior surfaces, wood structures or polyurethane foam.

j. Costs or charges due to inconvenience or loss of use, commercial or monetary loss due to time loss, and any other special, incidental or consequential damage of any kind or nature whatsoever.

8. CONDITIONS TO WARRANTY COVERAGE. The following are conditions to the availability of any benefits under the foregoing limited warranties:

a. The warranty registration card must be completed and returned to Crownline within fifteen (15) days after the purchase of the boat by the original retail purchaser.

b. No warranty coverage is provided for defects not reported to Crownline within the applicable warranty period.

c. Crownline must be given written notice within thirty (30) days from the date the defect was or should have been discovered. Notice must be sent to: CROWNLINE BOATS, INC., ATTN: CUSTOMER SERVICE DEPARTMENT, 11884 COUNTRY CLUB ROAD, WEST FRANKFORT, IL 62896, FAX: (618) 937-2277.

d. Crownline will not repair any condition or replace any parts: (1) if use of the boat is continued after the defect is or should have been discovered; and (2) such continued use causes other or additional damage.

e. PURCHASER must deliver the boat at the PURCHASER'S expense to Crownline (at the above address) or to such other authorized facility as Crownline in its sole discretion may direct. PURCHASER must pay the freight for return of the boat to PURCHASER from the specified location after inspection and repair or replacement has been completed.

9. Crownline will discharge its obligations under this warranty as rapidly as possible, but cannot guarantee any specified completion date due to the different nature of claims that may be made and services that may be required.

10. If the Crownline boat owner believes a claim has been denied in error or that Crownline or its dealer has performed the warranty work in an unsatisfactory manner, the owner must notify Crownline's Customer Service Department in writing at the address listed in paragraph 8c. above for further consideration. Crownline will then review the claim and take appropriate follow-up action.

11. By accepting delivery of the boat covered by this limited warranty, the PURCHASER and any subsequent owner of the boat agree as follows:

ANY LAWSUIT OR ARBITRATION REQUEST FOR ANY BREACH OF WARRANTY (EXPRESS OR IMPLIED) AGAINST CROWNLINE MUST BE FILED WITHIN ONE (1) YEAR AFTER THE CAUSE OF ACTION HAS ACCRUED (REGARDLESS OF THE TIME REMAINING IN THE WARRANTY PERIOD). ANY LAWSUIT MUST BE FILED IN FRANKLIN COUNTY, ILLINOIS. IN THE EVENT OF ANY DISPUTE BETWEEN THE BOAT OWNER AND CROWNLINE INCLUDING, WITHOUT LIMITATION, ANY DISPUTE ARISING FROM OR RELATED TO THIS LIMITED WARRANTY, THE BOAT AND COMPONENT PARTS COVERED BY THIS LIMITED WARRANTY AND/OR THE SCOPE OF THE ARBITRATION AGREEMENT UNDER THIS PARAGRAPH 11, EITHER THE BOAT OWNER OR CROWNLINE MAY CHOOSE TO HAVE SUCH DISPUTE RESOLVED BY BINDING ARBITRATION BY THE NATIONAL ARBITRATION FORUM UNDER ITS CODE OF PROCEDURE THEN IN EFFECT. THE ELECTION TO ARBITRATE MAY BE MADE AT ANY TIME BY EITHER PARTY MAILING OR PERSONALLY DELIVERING WRITTEN NOTICE OF SUCH ELECTION TO THE OTHER PARTY BUT NO LATER THAN THIRTY (30) DAYS AFTER THE ELECTING PARTY'S RECEIPT OF SUMMONS IN THE EVENT A LAWSUIT IS FILED BY THE OTHER PARTY.

ANY AWARD OF THE ARBITRATOR(S) MAY BE ENTERED AS A JUDGMENT IN ANY COURT HAVING JURISDICTION AND SHALL BE FINAL AND NON-APPEALABLE. IN THE EVENT A COURT HAVING JURISDICTION FINDS ANY PORTION OF THIS ARBITRATION AGREEMENT UNENFORCEABLE, THAT PORTION SHALL NOT BE EFFECTIVE AND THE REMAINDER OF THE ARBITRATION AGREEMENT SHALL REMAIN EFFECTIVE. INFORMATION REGARDING THE PROCEDURE FOR ARBITRATION MAY BE OBTAINED AT ANY OFFICE OF THE NATIONAL ARBITRATION FORUM, WWW.ARBITRATION-FORUM.COM, OR AT P. O. BOX 50191, MINNEAPOLIS, MINNESOTA 55405. UNLESS THE PARTIES MUTUALLY AGREE UPON A DIFFERENT LOCATION, THE ARBITRATION HEARING SHALL BE HELD AT A LOCATION SPECIFIED BY CROWNLINE IN ST. LOUIS, MO. IN THE EVENT OF ANY CONFLICT OR INCONSISTENCY BETWEEN THE TERMS OF THIS ARBITRATION AGREEMENT AND THE NATIONAL ARBITRATION FORUM'S CODE OF PROCEDURE THEN IN EFFECT, THE TERMS OF THIS ARBITRATION AGREEMENT SHALL PREVAIL AND BE CONTROLLING. THE PARTIES AGREE THAT THE TRANSACTION BETWEEN THEM INVOLVES INTERSTATE COMMERCE AND THAT THIS ARBITRATION AGREEMENT SHALL BE SUBJECT TO AND GOVERNED BY THE FEDERAL ARBITRATION ACT, 9 U.S.C., SECTIONS 1-16.

IF YOU DO NOT AGREE TO THE FOREGOING DISPUTE RESOLUTION METHOD, YOU MUST NOTIFY CROWNLINE IN WRITING AND RETURN THE BOAT COVERED BY THIS WARRANTY WITHIN FIFTEEN (15) DAYS AFTER TAKING DELIVERY OF THE BOAT.

12. Except only as provided in paragraphs 3, 4 and 5 above, the enforceability of this limited warranty is limited solely to the original retail purchaser of the boat covered by this limited warranty, and is not extended to, nor enforceable by any other person.

13. **ALL GENERAL, SPECIAL, INDIRECT, INCIDENTAL AND/OR CONSEQUENTIAL DAMAGES ARE EXCLUDED FROM THIS WARRANTY AND ARE HEREBY DISCLAIMED BY CROWNLINE.** Some States do not allow the exclusion or limitation of incidental or consequential damages, so the above limitation or exclusion may not apply to you.

14. **THIS IS A LIMITED WARRANTY. CROWNLINE MAKES NO WARRANTIES OTHER THAN THOSE CONTAINED HEREIN. ANY WARRANTY OF MERCHANTABILITY OR FITNESS FOR A PARTICULAR PURCHASE ARISING IN STATE LAW WITH RESPECT TO ANY COMPONENT OR PART OF THE BOAT IS LIMITED TO THE DURATION OF THE LIMITED WARRANTY APPLICABLE TO SUCH COMPONENT OR PART, AS SET FORTH ABOVE. SOME STATES DO NOT ALLOW LIMITATIONS ON HOW LONG AN IMPLIED WARRANTY LASTS, SO THE ABOVE LIMITATION MAY NOT APPLY TO YOU.**

15. This warranty gives you specific legal rights, and you may also have other rights which vary from State to State.

16. All obligations of Crownline are specifically set forth herein. Crownline does not authorize any person (including agents, employees and dealers of Crownline) to bind Crownline to any warranty concerning its boats, other than as herein stated, or to assume any liability in connection with boats manufactured by Crownline. Crownline's obligation with respect to this limited warranty is limited to making repairs to or replacing the defective parts and no claim for breach of warranty shall be cause for cancellation or rescission of the contract for sale of any boat manufactured by Crownline. **Crownline shall have the sole right and discretion to determine whether to repair or replace any defective parts or components covered by this limited warranty.**

17. Due to a continuing program of product development and improvement, Crownline reserves the right to change or improve the design of its boats without obligation to modify any boat previously manufactured and also reserves the right to change specifications, features and prices without prior notice.

18. No brochure, pamphlet or other written or pictorial presentation constitutes a warranty or representation as to any aspect of Crownline's boats or products.

19. Except as provided in paragraph 11 above, this limited warranty and the provisions set forth herein shall be governed by and construed in accordance with the laws of the State of Illinois.

20. This limited warranty applies only to 2007 model year boats manufactured by Crownline.

CROWNLINE BOATS, INC.
11884 Country Club Road
West Frankfort, IL 62896
(618) 937-6426

Crownline Boats, Inc. provides as part of our Signature Class Coverage a five year engine warranty. The first two years of coverage are provided by the engine supplier as Crownline is a certified OEM installer. Years three through five of extended coverage are provided by BPPC at 5125 County Road 101, Suite 200, Minnetonka, MN 55345. BPPC contact and warranty information is included with each boat at the time of purchase. Additional or duplicate information may be obtained by contacting BPPC at 1-800-950-3808 or online at www.boatwarranty.com

SERIAL NUMBERS

Your CROWNLINE, the engine(s) and propulsion unit(s), and other equipment onboard will have a serial number for identification. Prepare a list of all serial number items and keep it in a safe place off the craft. Use the Craft Information Sheet located in this section.

INTENDED USE

Your CROWNLINE is intended for use as a pleasure and sport craft.

CRAFT DESIGN CATEGORY (CE-DESIGNATED BOATS ONLY)

Significant Wave Height – is the mean height of the highest one-third of the waves, which corresponds approximately to the wave height estimated by an experienced observer. Some waves will be double this height.

OCEAN – Category A

Craft designed to operate in winds that may exceed wind Beaufort force 8 and in significant wave heights of 13'-1.44" (4 m) and above, and is largely self-sufficient. Abnormal conditions such as hurricanes are excluded. Such conditions may be encountered on extended voyages, for example, across oceans, or inshore when unsheltered from the wind and waves for several hundred nautical miles.

OFFSHORE – Category B

Craft designed to operate in winds up to Beaufort force 8 and the associated wave heights and in significant wave heights up to 13'-1.44" (4 m). Such conditions may be encountered on offshore voyages of sufficient length, or on coastal waters when unsheltered from the wind and waves for several dozens of nautical miles. These conditions may also be experienced on inland seas of sufficient size for the wave height to be generated.

INSHORE – Category C

Craft designed to operate in winds up to Beaufort force 6 and the associated wave heights and significant wave heights up to 6'-6.7" (2 m). Such conditions may be encountered in exposed inland waters, in estuaries and in coastal waters in moderate weather conditions.

SHELTERED WATERS – Category D

Craft designed to operate in winds up to Beaufort force 4 and the associated wave heights (occasional maximum waves of 1'-7.7" [0.5 m] height). Such conditions may be encountered in sheltered inland waters, and in coastal waters in fine weather.

PUBLICATIONS

Publications about onboard systems and equipment furnished by manufacturers other than CROWNLINE Boats may be included with your craft. Refer to these manufacturers' publications for additional operation and maintenance instructions not covered in this manual.

NAUTICAL GLOSSARY

Adrift Floating without mooring or direction.

Afloat On the water.

Aft Describing the after section of a vessel, or things to the rear of amidships and near the stern.

Aground Touching bottom.

Amidships In the center, the center portion of a vessel.

Anchor A forging or casting shaped to grip the sea bottom and, by means of a cable or rope, hold a boat in a desired position.

Anchorage A customary, suitable and (usually) designated harbor area in which vessels may anchor.

Bail To remove water from a boat by pump or bailer.

Beacon A post or buoy placed over a shoal or bank to warn vessels, also a signal mark on land.

Beam Imaginary line amidships at right angles to keel of vessel. Also vessels width amidships.

Bearing The direction or point of the compass in which an object is seen.

Bilge The lower internal part of a boat's hull.

Bow The forward part or front of the boat.

Bulkhead Vertical partition in a boat.

Burdened Vessel Former term for the vessel which must stay clear of vessels with the right-of-way.

Carburetor Backfire Flame Arrestor Required equipment on all motorboats except outboards and diesels. Reduces chance of fire caused by backfires in internal combustion engines.

Chart A map of a body of water that contains piloting information.

Chine The intersection of sides and bottom of a boat.

Cleat A piece of wood or metal with projecting ends to which lines are made fast.

Cockpit A well or sunken space in the afterdeck of a small boat for the use of the helmsman and crew.

Companionway A hatch or entrance, from deck to cabin.

Compass The instrument which shows the heading of a vessel.

Current The movement of the water in a horizontal direction.

Deadrise The rise of the bottom of a midships frame from the keel to the bilge.

Depth Sounder An electronic depth-finding instrument, measuring the time a sound wave takes to go from the vessel to the bottom and return, then displaying the result in feet, fathoms or meters.

Displacement Hull Type of hull that plows through the water even when more power is added.

Draft The depth of the vessel below the water line, measured vertically to the lowest part of the hull.

Dunnage Mats, boughs, pieces of wood or other loose materials placed under or among goods carried as cargo in the hold of a ship to keep them dry and to prevent their motion and chafing; cushioning or padding used in a shipping container to protect fragile articles against shock and breakage; baggage or personal effects.

Ebb An outgoing tide.

Electrolysis The breakup of metals due to the effects of galvanic corrosion.

Fenders Objects placed along the side of the boat to protect the hull from damage.

Flare The outward spread of the boat's sides from the waterline to the rail at the bow. Also, a pyrotechnic signaling device that can indicate distress.

Fore / Forward Toward the bow.

Freeboard The vertical distance measured on a boat's side from the waterline to the gunwale.

Galley The kitchen area of a boat.

Give-Way Vessel The one which must stay clear of vessels which have the right-of-way.

Gunwale The upper edge of a boat's side. (pronounced gunnel.)

Hatch An opening in a boat's deck for persons or cargo to go below.

Head A marine toilet.

Helm The wheel or tiller by which a ship is steered.

Holding Tank Storage tank for sewage, so that it will not be pumped overboard into the water.

Inboard More toward the center of a vessel; inside; a motor fitted inside the boat.

Inland Rules Rules of the Road that apply to vessel operation in harbors and certain rivers, lakes and inland waterways.

Intracoastal Waterways (ICW) Bays, rivers and canals along the coasts (such as Atlantic and Gulf of Mexico coasts), connected so that vessels may travel without going into the open sea.

Keel	The main structural member of a vessel, the backbone; the lateral area beneath the hull to provide steering stability and reduce leeway.
Knot	To bend a line. Also, a unit of speed equal to one nautical mile (6,076.10 feet) an hour. One nautical mile equals 1.15 miles (1.85 km).
Launch	(1) To put a vessel into the water; (2) a small open powerboat, mainly used for transportation between a vessel and shore.
Lee	The side opposite to that from which the wind blows.
Leeward	Situated on the side turned away from the wind. (Opposite of windward.)
Limber Holes	Drainage holes in the bilge timbers of a vessel, allowing water to run to a low point for pumping out.
List	A continuous leaning to one side, often caused by imbalance in stowage or wind.
LOA	Length over all; the maximum length of a vessels hull, excluding projecting spars or rudder.
Locker	A storage place, a closet.
Log	A record or diary of a vessels journey.
Lubber's Line	A mark or permanent line on a compass that shows the course of the boat.
Making Way	Making progress through the water.
MAYDAY	A radio distress call, from the French m'aidez (help me); SOS in Morse Code.
Mooring	Permanent ground tackle; a place where vessels are kept at anchor.
Nautical Mile	6076.12 feet, or 1852 meters, an international standard; the geographical mile, the length of one minute of latitude at the equator, is 6087.20 feet.
Outdrive	A propulsion system for boats, with an inboard motor operating an exterior drive, with drive shaft, gears and propeller; also called stern-drive and inboard/outboard.
PFD	Personal Flotation Device.
Pitch	(1) The up and down movement as the bow and stern rise and fall due to wave action; (2) The theoretical distance advanced by a propeller in one revolution.
Planing Hull	Type of hull that is shaped to lift out of the water at high speed and ride on the surface.
Port	The left side of a boat when you are facing the bow, also a destination or harbor.

Privileged Vessel	Former term for the vessel with the right-of-way.
Propeller	Wheel or screw. Mechanism that pushes water aft to propel the boat.
Rules of the Road	The nautical traffic rules for preventing collisions on the water.
Scope	The length of the anchor rope or chain. 6 to 1 scope means that the length of the anchor rope from the boat to the anchor is 6 times the depth of the water.
Scupper	A hole allowing water to run off the deck.
Seacock	A through-hull valve, a shutoff on a plumbing or drain pipe between the vessels interior and the sea.
Stand-On Vessel	The vessel with the right-of-way.
Starboard	The right side of a boat when you are facing the bow.
Stern	The after end or back of the bow.
Transom	The transverse planking which forms the after end of a small, square-ended boat. (Outboard motors are usually attached to a transom.)
Trim	To arrange weights in a vessel in such a manner as to obtain desired draft at bow and stern.
Underway	Vessel in motion, i.e., when not moored, at anchor or aground.
USCG	United State Coast Guard
USPS	United States Power Squadron, a private membership organization that specializes in boating education and good boating practices.
Vessel	Every kind of watercraft, other than a seaplane on the water, capable of being used as a means of transportation on water.
VHF Radio	A Very High Frequency electronic communications and direction finding system.
Wake	Moving waves, created by vessel motion. Track or path that a boat leaves behind it, when moving across the water.
Way or Underway	Movement of a vessel through the water. Technically it is underway when not at anchor, aground, or made fast to the shore. The common usage is interpreted as progress through the water. Headway when going forward and Sternway when it is going backwards.
Whistle Signal	A standard communication signal between boats, to indicate change of course, danger or other situations.
Windward	Situated on the side closest to the wind. (Opposite of leeward.)

CERTIFICATION AND SPECIFICATION

All CROWNLINE boats meet or exceed U.S. Coast Guard requirements.

The CE Mark means your CROWNLINE boat(s) meets or exceeds the European Directives for Recreational Vessels as published by the International Organization for Standardization (ISO).

All CROWNLINE Boats are National Marine Manufacturers Association (NMMA) certified. NMMA certified vessels are in compliance with applicable federal regulations and American Boat and Yacht Council (ABYC) standards and recommended practices.

CROWNLINE Boats are International Marine Certification Institute certified (IMCI) for the EU Directive for recreational craft.

International Marine Certificate Institute
Treves Centre
rue de Treves 45
1040 Brussels, Belgium
Tel. Int + (32) 2 238 7892
CROWNLINE Certificates - CRWN002 thru CRWN021 and
BCRWN022 thru BCRWN054

National Marine Manufacturers Association
200 E. Randolph Dr.
Suite 5100
Chicago, Illinois U.S.A. 60601
Tel. (312) 946-6200

MODIFICATIONS PROHIBITED

CROWNLINE Boats, Inc. does not condone or encourage modifications to CROWNLINE boats or engine packages, including modifications to enhance the performance of the boat or engine. **Modifications may create hazardous conditions that represent a risk of serious harm or death.** Persons making such modifications do so at their own risk and, by doing so, agree to assume any and all liabilities for any consequences which may occur as a result of such modifications. CROWNLINE Boats, Inc. reserves the right to limit or refuse warranty coverage on any boat that has been modified beyond original factory specifications.

CRAFT INFORMATION SHEET

Purchase Dealership

Name _____ Sales Manager _____

Address _____ Phone _____

Fax _____ Fax _____

Service Dealership

Name _____ Sales Manager _____

Address _____ Phone _____

Fax _____ Fax _____

GENERAL

Model Name

State of Registration

Hull Identification Number

Boat Name

Hull Color(s)

Length Beam Weight

Draft (Drive Down)

Draft (Drive Up)

Freeboard (Fore)

Freeboard (Aft)

ENGINE

Manufacturer

Model Name/Number

Oil Type/SAE Quarts Filter Type

Serial Number

Transom Serial Number

DRIVE UNIT

Serial Number

FUEL SYSTEM

Tank Capacity

Filter Type

FRESH WATER

Tank Capacity

PROPELLER

Pitch

Model Number

BATTERY

Manufacturer

Model Number

FIRE EXTINGUISHER

Serial Number

Location

RADIO

Manufacturer

Type

Model Number

Serial Number

KEY NUMBERS

Cabin

Glove Box

Ignition

AIR CONDITIONER

Manufacturer

Kilowatts

Model Name/Number

Serial Number

FLOAT PLAN

The boat listed below should return by:
Date_____ Time_____ at the latest.
If it has not, please call the emergency numbers listed below
Police _____Coast Guard_____
_____Other Authority _____

Trip Information

_____
Departure Date/Time

_____
Departure Location

_____
Return Date/Time

_____
Return Location

Boat Description

_____
Boat Name

_____
Type

_____
Registration Number

_____
Manufacturer

_____
Length

_____
Hull Color

_____
Deck (Color)

_____
Cabin (Color)

_____
Trim (Color)

_____
Other Physical Characteristics

Engine

_____
Type

_____
HP

_____
Fuel Type

_____
Fuel Capacity

Safety & Emergency Equipment

(YES/NO & NUMBER)

Life Jackets _____
Cushions _____
Distress Light_____
Flares_____
Smoke Signals_____
Flash Light_____
Mirror _____
Paddles _____
Anchor _____
Food _____
Water_____
Life Raft _____

Radio

_____
Onboard (Yes/No) _____

_____
Type

_____

_____
Frequencies usually used or monitored

Passenger List

(Use Another Sheet If Necessary)

_____
Full Name

_____
Age/Sex

_____
Phone Number

_____

_____
Complete Address

_____
Full Name

_____
Age/Sex

_____
Phone Number

_____

_____
Complete Address

_____
Full Name

_____
Age/Sex

_____
Phone Number

_____

_____
Complete Address

ALWAYS FILL THIS SHEET OUT COMPLETELY—IN AN EMERGENCY ALL INFORMATION MAY BE HELPFUL

TRAVEL LOG

Date	Run Time	Fuel Used	Distance Traveled	RPM	Average Miles per Hour	Gallons per Hour

RESTRICTED AREAS

Before boating, check with Local, State and Federal authorities to identify restricted areas. Because of the threat of terrorism, the U.S. Coast Guard has and will continue to implement strict limits on watercrafts near U.S. Military and Coast Guard vessels and other potential targets.

PROPOSITION 65

A wide variety of components used on this vessel contain or emit chemicals known to the State of California to cause cancer and birth defects and other reproductive harm.

EXAMPLES INCLUDE:

- **Engine and generator exhaust**
- **Engine and generator fuel, and other liquids such as coolants and oil, especially used motor oil.**
- **Cooking fuels.**
- **Cleaners, paints and substances used for vessel repair.**
- **Waste materials that result from wear of vessel components.**
- **Lead from battery terminals and from other sources such as ballast or fishing sinkers.**

TO AVOID HARM:

- **Keep away from engine, generator and cooking fuel exhaust fumes.**
- **Wash areas thoroughly with soap and water after handling the substances above.**

EMISSION CONTROL WARRANTY INFORMATION

CRO_011

Your CROWNLINE may be equipped with an engine that meets the strict requirements set forth by the California Air Resources Board (CARB). If so, the engine has a special environmental tag and the boat has this label affixed to it. The tag and the label are required by the California Air Resources Board (CARB). The label has 1, 2, 3, or 4 stars. The label MUST be affixed to the craft, if it is operated in the state of California and/or bordering waters.

PRODUCT IMPROVEMENT

In keeping with the CROWNLINE Boats, Inc. policy of continuing product improvement, equipment and specifications may be changed without notice. In the event of conflicting information between your CROWNLINE Owner's/Operator's Manual and the supplied manufacturers' manuals, in all cases, adhere to the manufacturers' recommendations for equipment installed on your boat. Equipment manufacturers' information concerning service, maintenance, repair and operation shall supersede this manual. Consult your CROWNLINE dealer for confirmation and additional information.

For a complete list of standard and optional features and equipment, consult your local dealer. Due to a policy of continual product improvement, specifications are subject to change without notice. The weights and volumes are estimated and can vary from boat to boat because of options and equipment.

VENDOR SUPPLIER LIST

This is a list of some of the quality products used to build your CROWNLINE. This list will also help you identify or contact the supplier in the event questions arise.

Item Description	Supplier	Website
Air Conditioners	Marine Air	www.marineair.com
Battery Switch	Perko	www.perko.com
Bilge Pumps	Rule	www.rule-industries.com
Bucket Seats	Milsco	www.milsco.com
Canvas	S.A. Recasens	www.recasens.com
Carbon Monoxide Detector	MTI Industries	www.mtiindustries.com
Carpet	Syntec	www.syntecind.com
Compass	Ritchie	www.ritchienavigation.com
Depth Sounder	Faria	www.faria-instruments.com
Engine	Mercury	www.mercurymarine.com
Engine	Volvo Penta	www.volvo.com
Engine Extended Warranty	BPPC	www.boatwarranty.com
Exhaust	Corsa Exhaust	www.corsaperf.com
Fire Extinguisher	First Alert	www.firstalert.com
Fire Extinguishers	SeaFire	www.sea-fire.com
Galvanic Isolators	Pro Mainer	www.promariner.com
Generators	Kohler	www.kohlerpowersystems.com
Gelcoat	Cook Composites	www.ccponline.com
Graphics	Sharpline	www.sharpline.com
Marine Plywood	Greenwood Products	www.greenwoodproducts.com
Navigation Light	Attwood	www.attwoodmarine.com
Seat Slide	Tecla	www.teclausa.com
Shipping Covers	Transhield	www.transhield-usa.com
Shocks	SPD	www.spdhardware.com
Shore Power	Marinco	www.marinco.com
Stainless Rails	GG Schmitt	www.ggschmitt.com
Stereos and Speakers	Sony	www.cpsdistributors.com
Stoves	Kenyon	www.kenyonappliance.com
Tilt Mechanism	Teleflex	www.teleflex.com
Toilet	ITT Jabsco	www.ittjabsco.com
Trim Tabs	Lenco	www.lencomarine.com
Vinyl	Omnova	www.omnova.com
Wakeboard Towers	Xtreme	www.xtremetowers.com
Wash Down Pump	Shurflo	www.shurflo.com
Wash Tanks and Heads	Sealand	www.dometicsanitation.com
Windlass	Sprint	www.lewmar.com
Windshields	Taylor Made	www.taylormadeproducts.com

SAFETY AWARENESS

Your CROWNLINE Owner's/Operator's Manual uses five levels of advisory and hazard statements to alert you to special information, operating procedures or safety precautions. All statements begin with a signal word to identify the level and importance of the statement. Statement levels follow this order:

Hazard and Levels

The use of hazard statements is determined by the likely consequence of the warning with regard to severity (death, serious personal injury or minor injury), and the probability of severity (WILL result in, COULD result in). Not following the recommendations contained in any of these statements may result in death or serious personal injury.

⚠ DANGER

Indicates a hazardous situation which, if not avoided, will result in death or serious injury.

⚠ WARNING

Indicates a hazardous situation which, if not avoided, could result in death or serious injury.

⚠ CAUTION

Indicates a hazardous situation which, if not avoided, may result in minor or moderate injury.

Advisory and Levels

Advisory statements signal conditions that affect equipment operation, maintenance and servicing practices. These statements occur in two levels:

NOTE: Used to signal the possibility of damage to equipment or associated components.

IMPORTANT: Signals a general advisory statement that clarifies or highlights a particular section of text.

SAFETY ON-BOARD

The popularity of boating and other water sports has undergone a tremendous growth in the past years. Safety is a very important issue for everyone who shares in the use of our waterways.

LIFE RAFT CONSIDERATION

Preparing for the safety of you and your passengers should always be your highest priority. A life raft should be a consideration to safe boating. If you decide to have a life raft on-board, make sure it is stored in a location known by all passengers on-board. The recommended location to store a life raft is in the aft cabin, if equipped, or in the engine storage areas.

SAFE BOATING INSTRUCTION

This manual is not intended to provide complete training on all aspects of craft operation. We strongly recommend that all operators of this craft seek additional training on boat handling and safety. Some states require youths 16 years of age and younger to complete a boating safety course before operating any watercraft. Many others require operators under the age of 18 to be licensed in small boat operation.

The following is a listing of some of the agencies and organizations that offer Water Safety, First Aid and CPR courses several times a year. To find boating safety courses in your area, contact your state's local boating agency or the Coast Guard boating safety Courseline at 1-800-336-BOAT (2628) (1-800-245-BOAT {2628} in Virginia), United States Coast Guard Auxiliary, www.cgaux.org, United States Power Squadrons, 1-888-FOR-USPS, www.usps.org or United States Coast Guard Office of Boating Safety, www.uscgboating.org.

SAFE BOATING PRACTICES

Boating-related accidents are generally caused by the operator's failure to follow basic safety rules or written precautions. Most accidents can be avoided if the operator is completely familiar with the craft and its operation, and can recognize potentially hazardous situations.

In addition to everyday safety, failure to observe the safety recommendations may result in death or serious personal injury to you or to others. Use caution and good judgment when operating your craft.

- **Pay extra attention to commercial and recreational traffic when boating in shipping channels and other heavily traveled waterways.**
- **Look before you turn the craft. As a boater you are obligated to maintain a course and speed unless it is safe to alter course and speed. Look before you turn.**
- **Improper operation of the craft is extremely dangerous. Operators must read and understand all operating manuals supplied with the craft before operation.**
- **On-board equipment must always conform to the governing federal, state and local regulations.**
- **DO NOT operate the craft while under the influence of alcohol or other drugs.**

- **DO NOT stand or allow passengers to stand or sit on the boarding platform, stand in the craft, or sit on the transom, seat backs, engine cover or sides of the craft, while the engine is running. You or others may be exposed to carbon monoxide or thrown from the craft.**
- **DO NOT allow any type of spark or open flame on board. It may result in fire or explosion.**
- **DO NOT leave children in the craft without adult supervision.**
- **DO NOT obstruct the operator's view.**
- **DO NOT dive from the craft. Death or serious personal injury may occur from striking the bottom or submerged objects.**
- **DO NOT swim near the craft when the engine is running. Being in NEUTRAL is not enough, the propeller may still be turning and carbon monoxide may be present.**
- **DO NOT replace your craft's marine parts with automotive parts.**
- **DO NOT remove or modify any components of the fuel system except for maintenance by qualified personnel. Tampering with fuel components may cause a hazardous condition.**
- **DO NOT operate the craft if any system component is faulty.**
- **Be sure to securely attach the engine stop switch lanyard to a part of your clothing, such as a belt loop, when operating the craft.**
- **Be sure to keep a watch for other boats, swimmers and obstructions in the water. Stay away from other boats and personal watercraft.**
- **Be sure to have an experienced operator at the helm and always have at least three people present for safe towing – one to drive, one to observe and one to ski or ride.**
- **Seek shelter from open water if there is threat of lightning.**
- **Operate slowly in congested areas such as marinas and mooring areas.**
- **DO NOT leave the helm while the engine is running.**
- **Use care when walking on the deck. A wet deck may be slippery.**
- **DO NOT operate the engine in a confined space, engine exhaust contains carbon monoxide.**
- **DO NOT go under the boat cover with the engine running or shortly after the engine has been running.**
- **Allow adequate ventilation with fresh air before entering.**
- **Slow down when crossing waves or wake in order to minimize the impact on passengers and the craft.**
- **When you leave the craft, take the keys with you. Keep untrained and unauthorized persons from operating the craft.**

RULES OF THE ROAD

⚠ WARNING

The nautical Rules of the Road must be followed to prevent collisions between vessels. Like traffic laws for automobiles, the operator is legally required to follow the rules.

Your CROWNLINE boat is subject to marine traffic laws known as Rules of the Road. There are two sets of rules: the United States Inland Navigational Rules and the International Rules. The United States Inland Rules are applicable to all vessels inside the boundary lines separating inland and international waters.

These rules can be obtained from your local U.S. Coast Guard Unit or the United States Coast Guard Headquarters (1300 E. Street NW, Washington, D.C. 20226) in the publication titled **Navigational Rules, International-Inland**.

The Coast Guard also publishes several other helpful pamphlets, including the **Boating Safety Training Manual, Federal Requirements for Recreational Boats** and **Aids to Navigation** (U.S. Coast Guard pamphlet #123), which explains the significance of various lights and buoys.

IMPORTANT: Because of proposed changes in buoys and markers, CROWNLINE advises you to contact the U.S. Coast Guard for the latest information.

WARNING MARKERS

Always check with local authorities concerning regional hazardous areas and how they are marked. Other considerations include:

- Craft operators must be able to recognize marine flag designs and respond accordingly.
- Caution should always be exercised relative to swimmers. Swimming areas may not always be marked.
- Navigation markers identify navigable routes and indicate water hazards. Craft operators should familiarize themselves with these important navigational tools and operate their crafts accordingly.
- Be prepared to assist anyone flying a “distress” flag as they are requesting immediate assistance.

OPERATING UNDER THE INFLUENCE

⚠ WARNING

Operating a boat under the influence of alcohol and other drugs can result in death or severe personal injury. DO NOT operate the boat under the influence of drugs or alcohol, or if your judgment is impaired.

Federal and state laws prohibit operating a boat under the influence of alcohol and other drugs. These regulations are actively enforced.

DO NOT use drugs or alcohol while boating. The operation of motorized vessels while under the influence carries a significant penalty and is strictly enforced by the Coast Guard. The use of drugs or alcohol will impair your judgment and reaction time, and keep you from safely operating your craft.

RENDERING ASSISTANCE

If you see a distress signal or suspect another vessel is in trouble, you must assume it is a real emergency and render assistance immediately. By law, the operator in charge of the craft is obligated to provide assistance to any individual in danger if such assistance can be provided safely. Failure to render assistance can result in a fine and/or imprisonment.

The 1971 Boating Safety Act grants protection to a “Good Samaritan” boater providing good faith assistance, and absolves a boater from any civil liability arising from such assistance.

FIRES

Most fires are the result of gasoline and oil accumulating in the bilge from careless fueling or maintenance practices. Use the fire extinguisher at the base of the flames, using a sweeping motion.

Careful and accurate use of the available chemicals should contain most fires.

Make sure the fire has been extinguished. If so, check damage and get assistance immediately. If not, get out of the craft and swim at least 25 yards (23 m) upwind from the boat and use the visual distress signals to get assistance.

Onboard fires involving the fuel system usually result in either an explosion, which will completely destroy the craft, or the craft burning to the waterline and self-extinguishing. Deciding on abandoning the boat or staying to fight the fire is difficult and depends on many factors. Try to devise a fire plan in advance to help make that decision quickly and without hesitation.

⚠ DANGER

Burn hazard from gasoline floating on water, which, if ignited, can cause death or serious personal injury. Gasoline will float on top of water and can burn. If the boat is abandoned, swim upwind, far enough to avoid fuel that can spread over the surface of the water (see Figure 2-1).

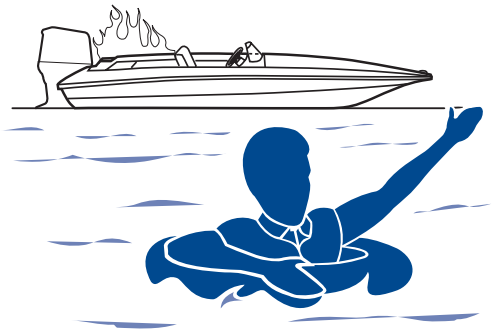

KC-0162-CL

Figure 2-1

CAPSIZING AND SWAMPING

A craft may capsize or swamp when it is least expected. Like fires, try to devise a plan in advance for what to do if it should happen. Always keep in mind the following guidelines:

- Try to turn the engine OFF to prevent damage.
- If others were onboard, try to locate them, make sure they are conscious and they can swim.
- STAY WITH THE BOAT! Climb up on the hull and try to get assistance.
- DO NOT try to swim to shore. It is usually farther than it looks.

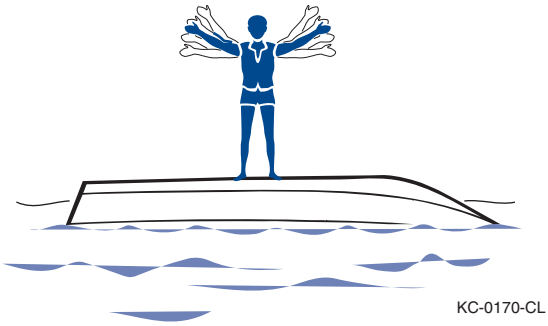

Figure 2-2

WATER SPORTS

Advancements in technology have created new and improved products for enjoyment on the water. Water skiing, kneeboarding and riding on popular inflatable towed devices requires an increase in safety awareness. For hand signals recommended by the American Water Ski Association (AWSA), see **Figure 2-3**.

A larger craft tends to produce a wake too big for skiers. Only boats that are equipped with a ski-tow eye or tow pylon should be used to pull water skiers.

IMPORTANT: It is unlawful to participate in water sports while under the influence of alcohol or other drugs.

When participating in water sports, be safe and courteous and follow these guidelines:

- DO NOT perform water sports in congested areas.
- Stay away from navigation markers.
- Stay away from other crafts and water sports participants.
- Return immediately to a fallen water sport participant.
- Regularly inspect water sport equipment to ensure it is safe.
- Be considerate to fishermen and everyone you share the water with.

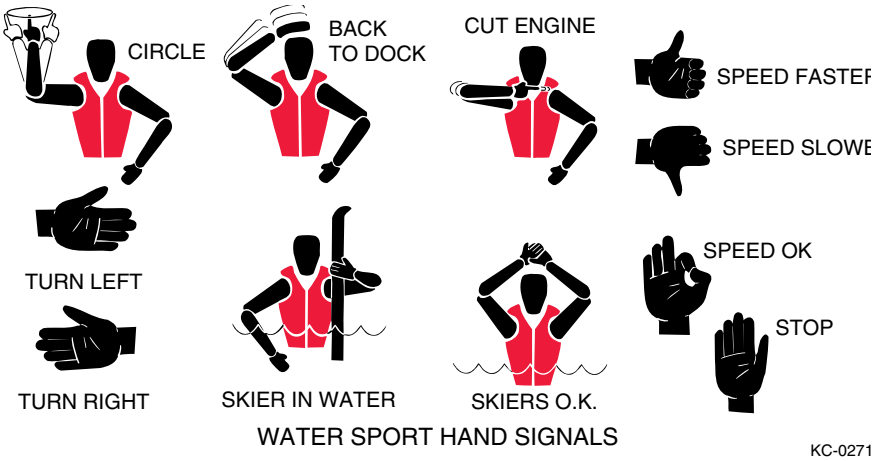

Figure 2-3

Safety Requirements

DO NOT take unnecessary chances! Remember that at least three people are needed for safe towing.

⚠ WARNING

Failure to adhere to the following warnings may result in serious personal injury or death to you and/or others.

- **Always wear a U.S. Coast Guard approved personal flotation device (PFD).**
- **Have a rear-facing observer aboard to inform craft operator of what is taking place behind the craft.**
- **DO NOT allow anyone near the propeller(s), even when the engine is off. Propeller blades can be sharp and can continue to turn after the engine is off.**
- **Never participate in towed water sports near beaches or in restricted areas.**

- **DO NOT wrap ski lines or mooring lines around any body part which may become entangled in the line if you fall overboard and the craft is moving.**
- **Keep track of ski lines and dock lines so they do not become entangled in the propeller.**
- **DO NOT use boarding platform with the engine running.**
- **DO NOT "teak surf," or "kite fly."**

⚠ WARNING

CROWNLINE boats are not designed for the towing of Para-sails, Kites, Gliders or any other device that is designed to become airborne when towed behind a boat.

SAFETY RECOMMENDATIONS

As the owner of your new CROWNLINE boat, you are responsible for the safety of both yourself and your passengers. It is your responsibility to know and follow all safety recommendations.

1. Keep your craft and equipment in safe operating condition. Make a practice of regularly inspecting the hull, engine, safety equipment and all boating gear.

IMPORTANT: Inspections before going out and on return are a good idea.

2. Follow the safety procedures for refueling your craft.
3. Know the fuel tank capacity and average fuel consumption at frequently used RPMs. Make sure sufficient fuel is on-board for anticipated cruising requirements. And, keep an adequate reserve of fuel in case your plans change due to weather or other circumstances.
4. Make sure the required lifesaving and fire extinguishing equipment is on-board, clearly marked, accessible and in working condition. Make sure all passengers know the location and proper operation of this equipment.
5. Be aware of the weather. Check the latest weather reports for possible changing conditions prior to departure. Strong winds and thunderstorms are dangerous.
6. Keep up-to-date charts on-board.
7. Always leave a travel plan with someone onshore before you go out (use a copy of the Travel Log located in Section 1).
8. On the water, good judgment and courtesy should be used at all times.
9. In case of emergency, at least one other person should know the basic operation of your craft.
10. DO NOT allow passengers to ride on sundecks, swim platforms or on the sundeck/motor cover areas, outside the cockpit area, while the craft is under way. Aft facing seating areas, outside of the cockpit, are intended to be used only when the engine is off and conditions allow safe occupancy. Never dive from a boat and extended swim platforms.

11. While the craft is underway, all passengers should remain seated, and all doors and walk-through windshields should be secured in their closed positions. While craft is NOT underway or anchored, water and/or wave conditions can affect passenger stability.
12. DO NOT use the swim platform or boarding ladder(s) while the engine(s) are running. Ladder(s) should be stowed away before getting underway.
13. Know and obey the Rules of the Road.
14. DO NOT overload or improperly load your craft. The capacity plate should be used as a guide only. Common sense dictates that the capacity of your craft will be reduced by large waves or bad weather conditions. Be aware of local weather reports and water conditions.
15. If you have a ship-to-shore radiotelephone, always respond to distress calls.
16. The extended swim platform (if applicable) is not intended for storage or occupancy while underway. Static load (persons) ratings are 500 lbs for each model.

Water Sports Ethics

Be aware of risks in boating, water sports, skiing and cruising that common sense and personal awareness can help reduce.

Know your levels of ability and stay within them.

- Always wear a U.S. Coast Guard type III PFD vest.
- Avoid CO poisoning!
- DO NOT operate craft or participate in water sports under the influence of alcohol or drugs.
- DO NOT ski or ride in shallow water, or near shore, docks, pilings, swimmers and other watercraft.
- Always have a person other than the craft driver as an observer, and agree on hand signals before starting.
- Never drag within 20 ft (6.1 m) behind a moving craft.
- Always turn ignition off when anyone is near watercraft power drive unit.
- Know your Owner's/Operator's Manual and inspect your equipment.
- Know the laws, the risks around the sport and the proper use of equipment.
- Know the waterways where you will be skiing or riding.
- Know your limitations.

Teak/Drag Surfing

READ, UNDERSTAND and be FAMILIAR with the information contained on warning labels and adhere to the practices described on them. The United States Coast Guard issued a SAFETY ALERT on August 28, 2001 that covers some of the issues of improper use of the boarding platform. The SAFETY ALERT and portions of the accompanying information follow:

Every year tragic deaths occur from the negligence of unsafe boating and dangerous activities. Experts say, “many of these deaths may have been caused by an invisible hazard, carbon monoxide poisoning.” Taking the risk of swimming under a boarding platform when the engine is running, skiing within 20 ft (6.1 m), “teak surfing” or “dragging” behind a moving boat can be fatal.

DO NOT use the boarding platform or ladder for any other purpose than boarding the boat or preparation of entering the water, and DO NOT use the boarding platform or ladder when the engine is running.

SAFETY ALERT From August 28, 2001:

The United States Coast Guard advised boaters not to “Teak Surf.” Recent boating fatalities revealed carbon monoxide (CO) emitted from a vessel’s exhaust resulted in CO poisoning and death. Do not allow persons in the vicinity of a swim platform or ladder when equipped (in the water or in the boat) with the engine(s) or a generator operating, while at rest or underway at slow speed. “Teak Surfing” places the individual in a position directly exposed to the CO in the engine’s exhaust. This may result in a loss of coherent responses and even death. In addition, “Teak Surfing” dangerously exposes the individual to a possible propeller injury, and since it is done without a life jacket (PFD), it significantly increases the probability of drowning. Therefore, the Coast Guard stresses, “Teak Surfing” is a very dangerous activity and advises boaters not to participate in it.

Carbon monoxide is one of the most dangerous gases. It impairs and can often lead to death. It is important to the Coast Guard that it should be avoided in every circumstance.

Precautions

- Make sure the operators and observers are experienced during water sports.
- Make sure everyone knows and uses hand signals and common skiing courtesy.
- Make sure the engine is OFF before allowing anyone to approach the craft.
- Make sure the engine is OFF before a skier enters or exits the craft, boarding platform or ladder.
- Make sure every participant wears a U.S. Coast Guard-approved Type III PFD. Special PFDs are available for high impact falls into the water.
- DO NOT put any body parts through the handle-bridle of the ski line, or wrap the line around any part of the body.

- Keep and maintain a distance of at least 100 ft (30.5 m) from all other objects, including other crafts, piers, rafts, mooring and navigational buoys, pilings, abutments or any other items.
- DO NOT ski at night or directly in front of other crafts.
- DO NOT ski near swimming areas, beaches or other watercraft.
- DO NOT follow directly behind another craft or skier without leaving a safe distance.
- DO NOT “back up” to anyone in the water.
- DO NOT ski with multiple skiers with different length ropes.
- DO NOT ski in limited visibility conditions.
- DO NOT approach the rear of the craft while the engine is running.
- Have ship to shore communication devices when operating at a significant distance off shore.

Water Skiing

Water skiing presents a special set of precautions to observe in recreational boating. The following precautions will reduce the hazards while water skiing:

1. Water ski only in safe areas, away from other crafts and swimmers, out of channels and in water free of underwater obstructions.
2. Only individuals that are capable swimmers should water ski.
3. Be sure that the skier is wearing a PFD. A properly designed ski vest is intended to keep a stunned or unconscious person afloat.
4. Always carry a second person aboard to observe the skier so the craft operator can give full attention to the operation of the craft and the waters ahead.
5. Approach a skier in the water from the lee side (down wind), and be certain to stop your motor before coming in close proximity to the skier.
6. Give immediate attention to a fallen skier. He or she is vulnerable in the water alone, and is difficult to be seen by other boaters.

Learn and follow the hand signals recommended by the American Water Ski Association. Skier, observer and craft operator must know and understand these signals.

WEATHER

Getting caught in severe weather is hazardous. While local weather forecasts are generally accurate, it is always possible for the weather to change quickly. There is no substitute for personal observation and a good understanding of weather conditions. Weather and wave conditions can affect fuel consumption and travel plans. Always prepare for the worst.

Check with local weather stations, the U.S. Coast Guard or Weather service broadcasts (162.55 or 162.40 Megahertz) for the latest conditions. It is recommended to check the weather not only before, but also periodically while you are boating.

IMPORTANT: Many marinas fly weather pennants; learn these since they can provide valuable information on changing weather conditions (see **Figure 2-4**).

DAYTIME WARNING	DESCRIPTION	NIGHTIME WARNING
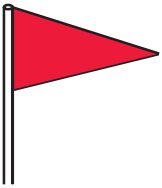	**Small Craft Advisory** - Winds greater than 18 knots, sustained for two hours or more or hazardous wave conditions. Following a storm, hazardous wave conditions can persist long after the high winds have subsided.	
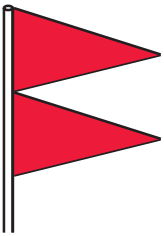	**Gale Warning** - Sustained winds (2 or more hours), of 34-47 knots.	
	Storm Warning - Sustained winds of 48 knots or greater.	
	Hurricane Warning - Forecast winds of 64 knots and above. Displayed only in connection with a hurricane.	

KC-0371C

Figure 2-4

Storms

Use common sense precautions if you are forced to operate your boat in stormy conditions:

Thunderstorms can spring up at any time. Weather forecasts may often indicate only the possibility of thunderstorm development.

1. Wear PFDs.
2. Learn basic cloud formations and watch the horizon for developing thunderstorms.
3. Keep a radio tuned to the local weather channel.
4. In the event of a storm, return to port if possible.
5. Close portals and hatches and secure them. Stow all loose gear below deck and tie-down any gear on deck.
6. Reduce speed and turn into the waves as the water gets rougher.

IMPORTANT: Running a boat parallel to large waves greatly increases the chances of capsizing.

7. Put a sea anchor out. If you do not have one, use a canvas bucket or any object that will offer resistance.
8. Radar reflectors (if installed on your boat) should be 18 in. (457.2 mm) diagonally and placed 12 ft (3.7 m) above waterline.

Fog

It is best to avoid operating your boat in foggy weather. When fog sets in, take bearings and log courses and speeds. You are required to emit a five second blast from your horn or whistle once every minute.

Additionally, have passengers wear PFDs and watch for oncoming vessels.

The two types of fog you most likely will encounter are warm-surface or cold-surface fog. You can determine the chances of fog formation by periodically measuring air temperature and dew point temperature. Anticipate the presence of fog if a slight variation in temperature develops between air and dew point readings.

1. As fog sets in, take bearings and mark your position on the chart while continuing to log your course and speed.
2. Turn on navigation lights.
3. Make sure that all boat occupants have their PFDs on properly.
4. If equipped with a depth sounder, compare its readings with soundings on your chart.
5. Have someone go forward to act as a lookout.
6. Reduce your speed. From time to time, stop the engine and listen for other fog signals.

7. Sound the horn or fog bell intermittently to warn others.
8. Anchor if you have any doubt about what is going on. Be sure to listen for other fog signals and continue to sound your foghorn or bell.

MAN OVERBOARD

Think through and follow these procedures if someone in the boat falls overboard.

- Remember, every second counts, you must act fast.
- Move throttle(s) to idle position immediately and yell “MAN OVERBOARD.”
- Throw a Type IV PFD out to the person immediately. A Type IV PFD should always be readily accessible at all times. If it is not, throw out some other floating object.
- Keep the person in the water in sight. Make one passenger responsible for watching the person. Do not go into the water to help the victim. One person in the water is enough trouble, and a panicky person in the water can present a drowning hazard to rescuers.
- Circle around quickly, approaching into the wind and waves. When the person is alongside, put the engine in neutral and throw them a Type IV PFD with a line attached or extend a paddle or boat hook within their reach. Once the victim is no longer in harm’s way, SHUT OFF the engine and get them on-board.

HAZARDOUS CONDITIONS

All waterways pose hazards that you should avoid: shallow water, tree stumps, sand bars, etc. Ask local boaters for information and consult a marine chart when boating on unfamiliar waters. As the operator of the craft, you should try to avoid all hazards, known and unknown. The following information does not contain all possible water hazards.

Dam Spillways

The water around a dam spillway is a hazardous area. It is subject to rapid changes. Boaters must keep clear of the spillway areas below dams.

Weeds

Weeds are generally a threat to your craft’s engine. Weeds on the propeller may cause the engine to vibrate. They can also restrict water intake causing the engine to overheat. If you run into weeds, stop the engine and clear the propeller and water intake completely of weeds.

Refer to the Engine Operation and Maintenance Manual for more information.

IMPORTANT: Weeds can sometimes be removed by shifting to NEUTRAL, pausing a moment, then shifting to REVERSE.

Shallow Water Operation

Operating in shallow water presents hazards. If the engine strikes an underwater object, check for engine and craft damage. If the engine vibrates excessively after striking an underwater obstruction, it may indicate a damaged propeller or transmission.

Sand bars in narrow inlets shift constantly, making it difficult to mark them with buoys. Sometimes, sand bars are indicated by waves as they form into breakers when passing over the sand bar. If you ground the boat on a sand bar, seek help from another boater or radio for help.

In coastal areas, tides can affect water level as much as 30 ft (9 m). Check with local marinas or Coast Guard stations for tide tables and current charts.

EMERGENCY CONDITIONS

Because an emergency requires immediate attention, it is important to stay calm and use good judgment. Regularly review all safety procedures and thoroughly check all safety equipment before going out on the water. Many serious situations can be lessened or avoided with careful planning, observation and common sense.

AIDS TO NAVIGATION

Learn to recognize the different buoys and day markers; they are the signposts of the waterways. The United States Aids to Navigation System (USATONS) is the primary marking system used on inland water, coastal waters and rivers. This system is maintained by the U.S. Coast Guard (USCG).

Types of Buoys

There are several types and shapes of buoys. Buoys may be unlighted, lighted, with sound or may have both an audible and a visual signal. Lights, bells and horns are used on buoys for night or poor visibility conditions. Different shapes of buoys are shown in **Figure 2-5**.

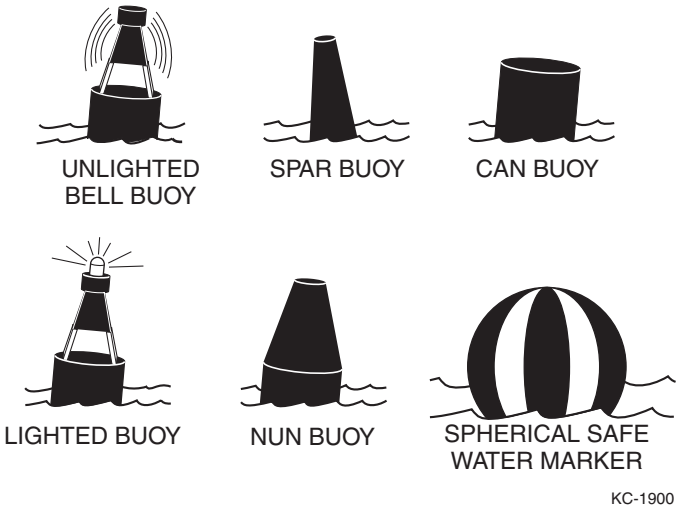

Buoy Types and Shapes
Figure 2-5

Buoys with unique light flashing characteristics are identified on nautical charts with the specific flashing pattern.

Mooring Buoys

The only buoys you are permitted to moor to are mooring buoys. Mooring buoys are white with a blue horizontal stripe. Mooring to a navigation buoy, regulatory markers or lateral markers is illegal.

KC-1901

Mooring Buoy
Figure 2-6

Regulatory Markers

Regulatory markers indicate dangerous or restricted controlled areas. These markers are used to indicate speed zones, areas set aside for particular use, general information and directions.

Regulatory markers are white with orange geometric shapes and also have orange bands near the top and at the water line of the buoy. You must obey regulatory markers (see **Figure 2-7**).

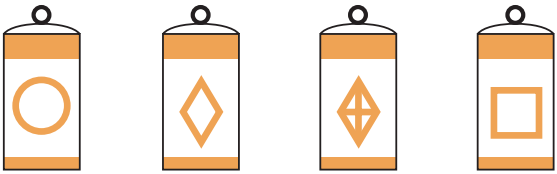

CONTROLLED AREA | DANGER | BOATS KEEP OUT | INFORMATION

KC-1903

Regulatory Markers
Figure 2-7

Lateral Markers

Lateral markers are oriented from the perspective of being entered from seaward (the boater is going toward the port). This means that red buoys are passed on the starboard (right) side of the vessel when proceeding from open water into port, and green buoys to the port (left) side.

The right side (starboard) of the channel is marked with RED, even-numbered buoys. The left side (port) of the channel is marked with GREEN, odd-numbered buoys.

Day markers are colored and numbered the same as buoys. RED, triangular day markers with even numbers mark the starboard side of the channel.

GREEN, square day markers with odd numbers mark the port side of the channel.

Fairways and mid-channels may be marked with safe water marks or buoys. These marks indicate safe water all around. Safe water marks are red and white striped and are round or have a red spherical topmark.

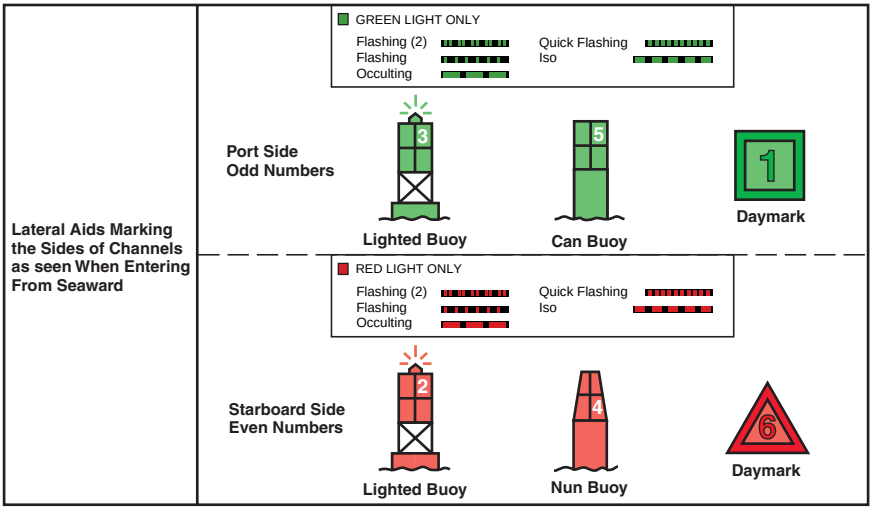

Lateral Aids Markers
Figure 2-8

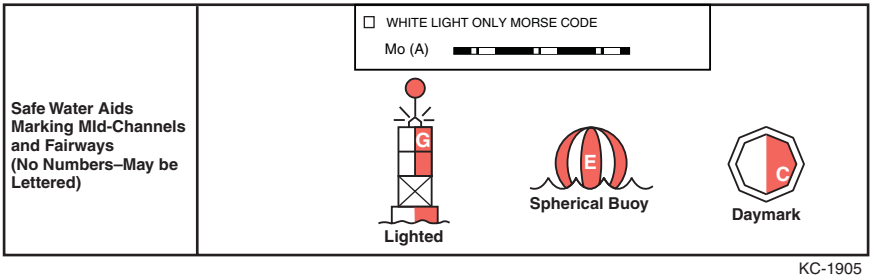

Safe Water Aids Markers
Figure 2-9

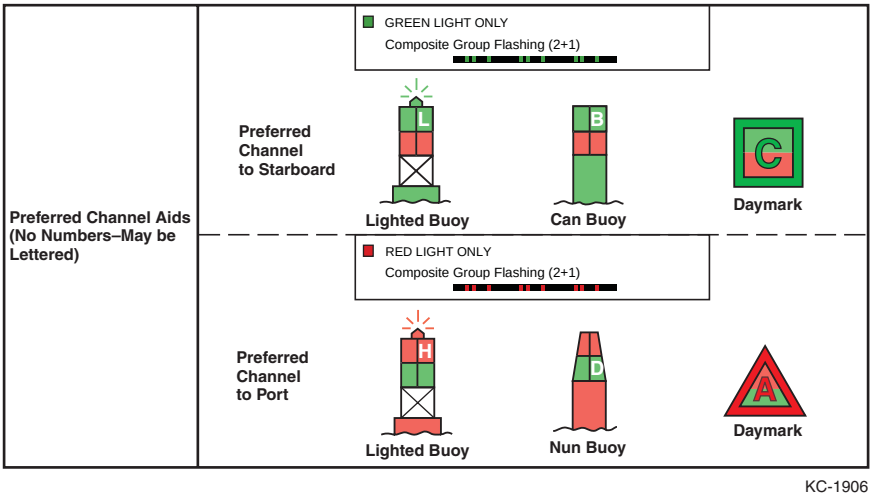

Preferred Channel Aids Markers
Figure 2-10

Obstructions, channel junctions, etc. are marked with RED and GREEN horizontally striped buoys.

A RED band at the top means the preferred channel is to the left of the buoy; a GREEN top band means the preferred channel is to the right of the buoy.

Isolated Danger Markers

Isolated danger markers indicate an isolated danger which may be passed on all sides. These markers are colored black with one or more broad horizontal red bands and are equipped with a topmark of two black spheres, one above the other.

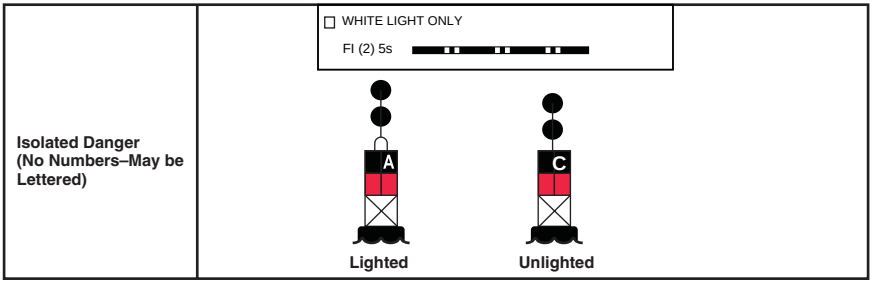

KC-1907

Isolated Danger Markers
Figure 2-11

On inland waters, a buoy with alternating vertical black and white stripes may be used to indicate that an obstruction or other danger exists between the buoy and the nearest shore. DO NOT pass between the buoy and the shore.

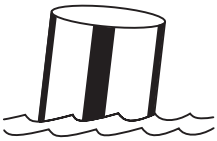

BLACK-STRIPED
WHITE BUOY

KC-1902

Inland Waters Obstruction Marker
Figure 2-12

RIGHT-OF-WAY

IMPORTANT: Boats with less maneuverability will have the right-of-way over more agile craft. You must stay clear of the vessel with right-of-way and pass to his stern.

Whistle/Horn Signals

Signaling other boats with a whistle or horn is similar to using turn signals on an automobile. It is not necessary to sound a signal every time a boat is nearby. Boat operators should signal their intention to avoid potentially confusing or hazardous situations.

It is customary for the privileged boat to signal first, and the burdened boat to return the same signal to acknowledge they understand and will comply. Use the danger signal (five or more short and rapid blasts) if intent is not clear.

Use the following signal blasts early enough to be noticed and understood by other boaters:

- One long blast: Warning signal (coming out of slip or passing astern)
- One short blast: Pass on my port side
- Two short blasts: Pass on my starboard side
- Three short blasts: Engines in reverse
- Five or more short and rapid blasts: Danger Signal!

Privileged Boats

Privileged boats have right-of-way and can hold course and speed. Sailboats and boats paddled or rowed have the right-of-way over motor boats. Sailboats under power are considered motorboats. Small pleasure craft must yield to large commercial boats in narrow channels.

Burdened Boats

The burdened boat is the boat that must make whatever adjustments to course and speed necessary to keep out of the way of the privileged boat.

Crossing Situation

In crossing situations, the boat to the right from the 12 o'clock to the 4 o'clock position has the right-of-way. It must hold course and speed. The burdened boat keeps clear and passes behind the privileged boat. Boats going up and down a river have the privilege over boats crossing the river (see **Figure 2-13**).

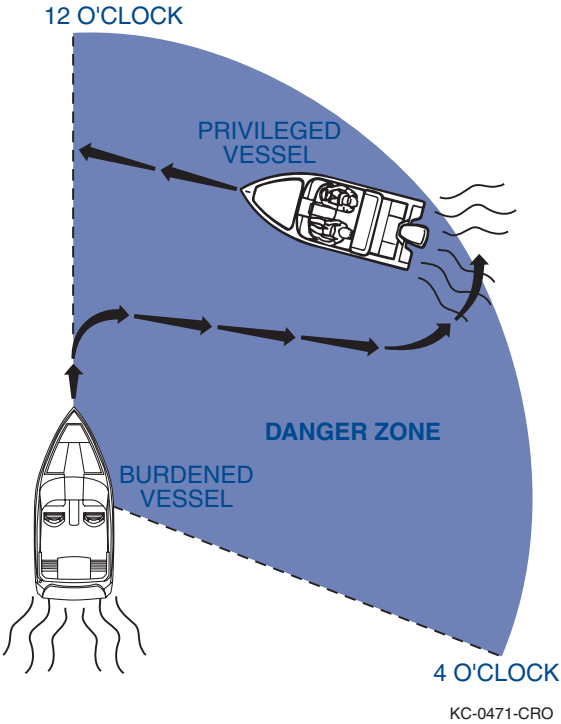

Figure 2-13

Meeting Head-On

Neither boat has the right-of-way in this situation. Both boats should decrease speed, turn to the right and pass port to port; if both boats are on the left side of a channel, each vessel should sound two short horn blasts and pass starboard to starboard (see **Figure 2-14**).

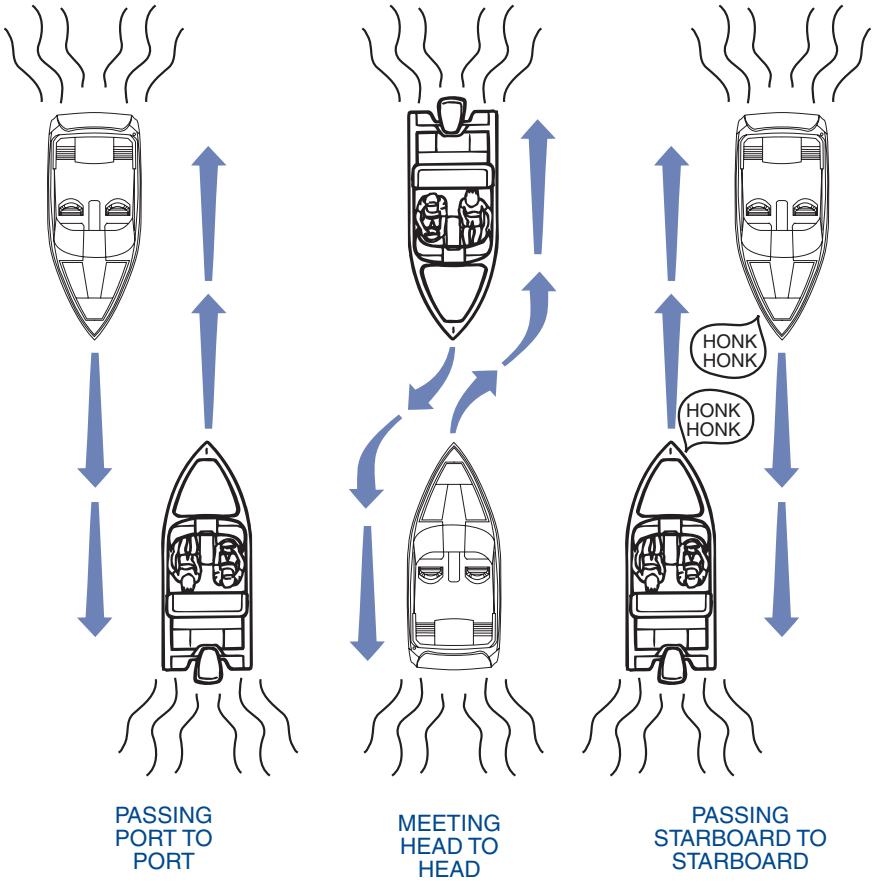

KC-0581-CL

Figure 2-14

Overtaking

The boat that is overtaking the one ahead of it is the burdened boat and must make any adjustments necessary to keep out of the way of the privileged boat. The privileged boat should hold its course and speed (see **Figure 2-15**).

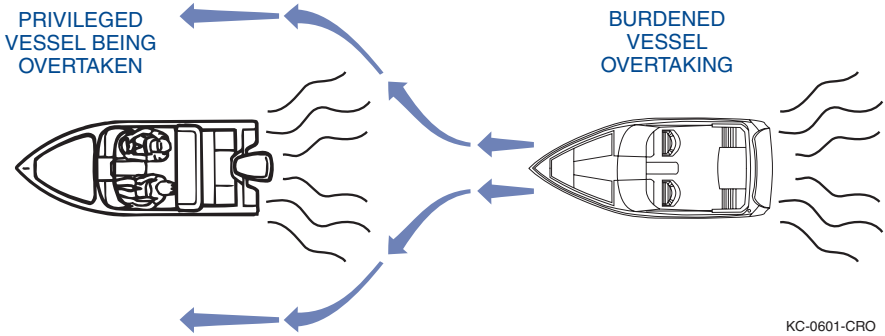

Figure 2-15

The General Prudential Rule

The general prudential rule regarding right-of-way is that if a collision appears unavoidable, neither boat has right-of-way.

As described in the Rules of the Road, both boats must act to avoid collision.

Night Running

Boats operating between sunset and sunrise (hours vary by state) must use navigational lights. Nighttime operation, especially during bad weather or fog, can be dangerous. All Rules of the Road apply at night, but it is best to slow down and stay clear of all boats, regardless of who has right-of-way.

Protect your night vision by avoiding bright lights and have a passenger, if possible, help keep watch for other boats, water hazards and aids to navigation.

The size, speed and direction of other vessels are determined at night from the running lights. A green light indicates the starboard side of the boat, and a red light indicates the port side. Generally, if you see a green light, you have the right-of-way; if you see a red light, give-way to vessel.

SAFETY EQUIPMENT

Federal law requires you to provide and maintain safety equipment onboard your CROWNLINE boat. Please refer to Federal, State and Local Regulations for complete and up-to-date lists of required equipment.

Required Safety Equipment

Your craft has been equipped at the factory with most federally required Class 1-16 ft to less than 26 ft (4.8 m to less than 7.9 m) safety equipment. As the owner, it is your responsibility to obtain other mandatory safety equipment not provided by the boat manufacturer, and to ensure all equipment is kept in good, serviceable condition. Your Crownline Dealer can also help with information on the required safety equipment.

IMPORTANT: Many state equipment requirements go beyond Coast Guard requirements. Contact your state boating office for further information.

Equipment requirements for coastal and inland waters differ.

Check with local authorities or the Coast Guard for further information about coastal water requirements.

MINIMUM REQUIRED SAFETY EQUIPMENT			
EQUIPMENT	**CLASS 1** (16 to less than 26 ft.) (4.9 to less than 7.9 m)	**CLASS 2** (26 to less than 40 ft.) (7.9 to less than 12.2 m)	**CLASS 3** (40 to not more than 65 ft.) (12.2 to not more than 19.8 m)
PERSONAL FLOTATION DEVICES (PFDs)	One approved Type I, II, III or V (if used according to Coast Guard requirements) device aboard for each person on board or being towed on water skis, etc.; and, in addition, one throwable Type IV device.		
FIRE EXTINGUISHER Must say Coast Guard Approved.	At least one B-I type approved hand portable fire extinguisher (Not required on outboard motorboats less than 26 feet in length and not carrying passengers for hire if the construction of such motorboats will not permit entrapment of explosive or flammable gasses or vapors and if fuel tanks are not permanently installed.)	At least two B-I type approved portable fire extinguishers; OR at least one B-II type approved portable fire extinguisher.	At least three B-I type approved portable fire extinguishers; OR at least one B-I type **plus** one B-II type approved portable fire extinguisher.
VISUAL DISTRESS SIGNALS (Required on coastal waters only.)	Orange flag with black square-and-disk (day); and an S-O-S electric light (night); or three orange smoke signals, hand held or floating (day); or three red flares of hand held, meteor, or parachute type (day/night).		
BELL, WHISTLE	Every vessel less than 12 meters (39.4 ft.) in length must carry an efficient sound producing device.	Every vessel 12 meters (39.4 ft.) but less than 20 meters (65.6 ft.) in length must carry a whistle and a bell. The whisle must be audible for 1/2 nautical mile.The mouth of the bell must be at least 200 mm (7.87 inches) in diameter.	

KC-0081.2-CRO

Figure 2-16

Personal Flotation Devices

Federal law also requires at least one Type I, II, III or V Personal Flotation Device (PFD) for each person on-board or being towed, and at least one Type IV throwable PFD in the craft.

PFDs are intended to help save lives. You and your passengers should wear a PFD whenever boating. It is very important children and non-swimmers wear a PFD at all times. Make sure all passengers know how to put on and properly adjust their PFDs. Also, select the proper type PFD for your kind of boating to ensure your time on the water is safe. There are four types of PFDs to wear and one type used for throwing in emergency situations.

TYPE I
LIFE PRESERVERS

KC-0041C_a

Type I: Most buoyant PFD and effective on all waters, especially open, rough water.

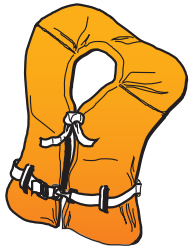

TYPE II
BUOYANT VESTS

KC-0051C_a

Type II: Good for calm water near shore on most inland waters where quick rescue is likely.

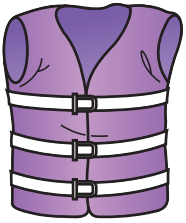

TYPE III
FLOTATION AIDS

KC-0042C_a

Type III: Good for most inland water applications where quick rescue is likely. Type III come in various styles and some are designed for water sport activities.

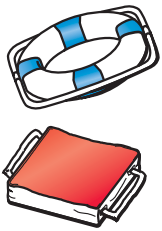

Type IV: Intended for heavy traffic inland waters where help is always available. Designed to be thrown to a person in the water and should never be worn.

TYPE IV
THROWABLE DEVICES

KC-0071C_a

Type V: Inflatable design for special use activities and may be used instead of a Type I, II or III PFD if used in accordance with the approval conditions on the label and if worn when the boat is underway.

Some Type V PFDs provide increased protection against hypothermia.

TYPE V HYBRID PFD
MUST BE WORN
WHEN UNDERWAY

KC-0043C_a

IMPORTANT:

- If a Type V PFD is to be counted toward the minimum requirements, it must be worn.
- Special PFDs are available for skiing and other water sports. These PFDs are constructed with materials suitable for high impact falls.

Keep the following PFD points in mind:

- Set an example and wear your PFD. Require your passengers to wear them.
- Make sure the PFD fits properly; especially children and non-swimmers.
- At the beginning of each season, check PFDs for damage, test for proper flotation and replace them if necessary.

Visual Distress Signals

All crafts over 16 ft (4.8 m) must have on-board day and night visual distress signals when operating on coastal waters, the Great Lakes, territorial seas and the waters directly connected to them, up to a point where the body of water is less than 2 miles (3.2 km) wide. Carry several types of signaling devices to handle a variety of conditions (see **Figure 2-17**).

If you are required to carry distress signals, you must have three USCG approved pyrotechnic devices. Make sure the signals are in serviceable condition and have not exceeded the expiration date. Store them in a cool, dry location in a waterproof container. Keep enough signals on-board to last at least three days.

No single signaling device is ideal under all conditions for all purposes.

Consideration should be given to carrying various types of equipment. Careful selection and proper storage of visual distress equipment is important when boating with young children.

Pyrotechnic Equipment

⚠ WARNING

Pyrotechnic signaling devices can cause fire and/or explosion, death, serious personal injury and property damage if improperly handled. Follow the manufacturer's directions.

VISUAL DISTRESS SIGNALS

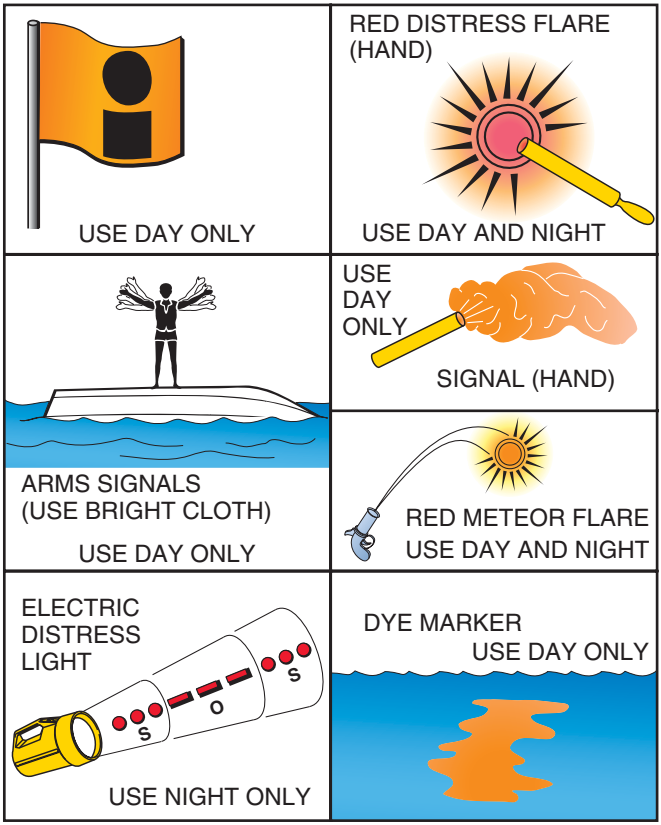

KC-0082C

Figure 2-17

Non-pyrotechnic Equipment

- Orange distress flag
- Electric distress light
- Horn or Whistle – All crafts over 16 ft (4.8 m) in length must be equipped with an operable horn or whistle and audible from one mile. Your Crownline boat is equipped with a USCG approved horn.

Additional Equipment

CROWNLINE Boats, Inc. recommends the following additional equipment to help make your boating experience safer and more enjoyable.

- Anchor and line
- Boat hook
- Bucket and sponge
- Cellular telephone
- Compass and navigational charts
- Docking and towing lines
- Empty plastic fuel can (7 gallon capacity or less)
- Engine and Accessory Manuals
- Engine lubricating oil
- Extra drain plug
- Extra keys
- Extra V-belts
- Fenders
- First aid kit
- Food and water provisions
- Manually operated bilge pump
- Paddle
- Portable AM/FM radio with weather band
- Replacement light bulbs
- Ship-to-shore radio
- Spare fuel filter
- Spare oil filter
- Spare propeller with fastening hardware
- Spare set of spark plugs and ignition parts
- Sunglasses and sun block
- Tool kit
- Tow line
- Waterproof flashlight and extra batteries

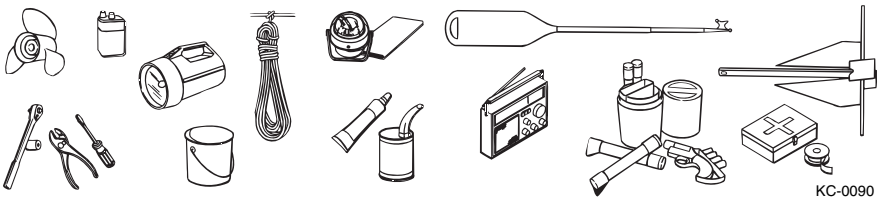

Figure 2-18

Fire Extinguisher

U.S. Coast Guard approved fire extinguishers are generally required on all Class I-III boats.

Extinguishers should be mounted in readily accessible areas away from the engine compartment and alcohol stove (if equipped). All passengers should know the location and how to operate each extinguisher.

Marine fire extinguishers must be classified to extinguish type B fires (gasoline, oil or grease). The size and number of required fire extinguishers depend on the size of your craft. Check pressure gauge regularly for proper pressure; have extinguisher filled if necessary.

Refer to MINIMUM REQUIRED SAFETY EQUIPMENT chart in this section.

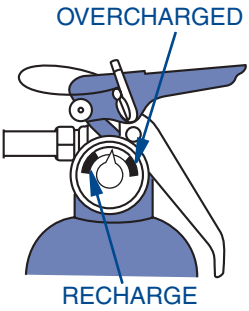

KC-0083-CRO

Figure 2-19

Hazard Communication Labels

Some or all of the hazard communication labels shown can be found in various locations on-board your Crownline boat. If your boat is missing any of these labels, notify your Crownline dealer for replacement.

IMPORTANT: Respective labels are determined by the standard and/or optional equipment that is actually installed on-board your boat upon delivery.

This label is applied to all boats equipped with shore power (AC).

WARNING

TO MINIMIZE SHOCK AND FIRE HAZARDS:
(1) TURN OFF THE BOAT'S SHORE CONNECTION SWITCH BEFORE CONNECTING OR DISCONNECTING SHORE CABLE.
(2) CONNECT SHORE POWER CABLE AT THE BOAT FIRST.
(3) IF POLARITY WARNING INDICATOR IS ACTIVATED, IMMEDIATELY DISCONNECT CABLE.
(4) DISCONNECT SHORE POWER CABLE AT SHORE OUTLET FIRST.
(5) CLOSE SHORE POWER INLET COVER TIGHTLY.

59146

This label is applied to all boats equipped with shore power (AC).

WARNING

Rotating propeller(s) can cause serious injury or death.
Do not use ladder or swim platform if engine is running.
Refer to your Owner's/Operators manual for additional information.

WARNING

Engine fumes contain carbon monoxide (CO), which can accumulate in and around the boat (under bimini, in cockpit, etc.). CO can be harmful or fatal if inhaled.
Keep all passenger areas well ventilated whenever running engine(s).
Refer to your Owner's/Operators manual for additional information.

CAUTION

Bimini top can break or dislodge causing a risk of personal injury or interference with the boat operation.
Do not use the bimini top as a support.
Operate boat only at low speeds if bimini top is in use.

#24293

CRO_018

This label is located by the capacity plate.

WARNING

Rotating propeller(s) can cause serious injury or death.
Do not use ladder or swim platform if engine is running.
Refer to your Owner's/Operators manual for additional information.

WARNING

Engine fumes contain carbon monoxide (CO), which can accumulate in and around the boat (under bimini, in cockpit, etc.).
CO can be harmful or fatal if inhaled.
Keep all passenger areas well ventilated whenever running engines.
Refer to your Owner's/Operators manual for additional information.

#24298

This label is located by the transom ladder.

WARNING

Avoid serious or fatal injury from falls.
Do not occupy seat when speed exceeds 5 m.p.h.

#24292

CRO_017

This label is applied to all open bow boats.

⚠ WARNING

Avoid serious injury or death from fire or explosion.
Gasoline vapors can explode.

- **Before fueling, stop engine, extinguish all flames and sources of ignition.**
- **Keep boat level and do not overfill.**
- **Regularly inspect fuel system for leaks.**
  Refer to the Owner's/Operators manual for additional information.

#24291

⚠ WARNING

Avoid serious injury or death from fire or explosion.
Hydrogen gas vapors from batteries charging can explode.
Adequate ventilation should be provided.
Any ignition source should be avoided in the vicinity of the batteries as recommended by the manufacturer.

#24294

⚠ WARNING

A wide variety of components used on this vessel contain or emit chemicals known by the State of California to cause cancer and birth defects and other reproductive harm.

EXAMPLES INCLUDE:
- Engine and generator exhaust.
- Engine and generator fuel, and other liquids such as coolants and oil, especially used motor oil.
- Cooking fuels
- Cleaners, paints, and substances used for vessel repair
- Waste materials that result from wear of vessel components
- Lead from battery terminals and from other sources such as ballast or fishing sinkers

TO AVOID HARM:
- Keep away from engine, generator, and cooking fuel exhaust fumes.
- Wash areas thoroughly with soap and water after handling the substances above.

#24289

⚠ WARNING

AVOID SERIOUS INJURY OR DEATH FROM FIRE OR EXPLOSION RESULTING FROM LEAKING FUEL. INSPECT SYSTEM FOR LEAKS AT LEAST ONCE A YEAR.

#33061

CRO_014

These labels are applied to all boats.

⚠ WARNING

Carbon Monoxide gas (CO) is produced by all gasoline engines and generator sets. Exposure to CO gas may cause injury or death.

Indications of CO poisoning may include headache, nausea, dizziness, and drowsiness. These may be mistaken for seasickness.

To prevent excess exposure and reduce the possibility of CO accumulations in the cabin, cockpit, and enclosed passenger areas of the boat, adequate ventilation must be assured. Cabin hatches, cabin doors, cabin windows, cockpit windshield windows and side windshield vents can be used to increase air movement through the cabin, cockpit and enclosed areas.

The following conditions may cause accumulations of CO in and around the boat:

1. Operation at slow speeds or dead in the water.
2. Operation with a high bow angle attitude.
3. Utilization of canvas tops, side curtains and back curtains.
4. Contributing climatic conditions, such as a head wind.
5. Operation of engines and/or generators in confined space or at dockside.
6. Any blockage of hull exhaust outlets.

See the Owner's Manual for more information.

#59145

⚠ CAUTION

Darker gelcoat surfaces will absorb and retain heat that could burn skin on contact. Protect skin contact by wearing shoes and/or other protective clothing when in contact with hot gelcoat surfaces.

#24329

CRO_019

This label is applied to all boats within accommodation spaces or enclosed passenger areas.

This label is located on the swim platform of boats with darker color gelcoat.

NOTES

OVERLOADING

DO NOT overload your boat. Your boat is equipped with a required capacity plate indicating the maximum acceptable load as determined by the manufacturer, following certain federal guidelines. Some boats with “Yacht” classification (over 26 ft [7.9 m]) may not have a capacity rating attached. It is the responsibility of the owner/operator to load the craft safely. If you have questions about your craft’s capacity, contact your CROWNLINE dealer.

⚠ WARNING

An overloaded boat can cause death or serious personal injury. DO NOT purposely overload your boat.

The capacity plate has the information permanently printed on it for the total weight of persons, gear and other items which the boat is capable of carrying under normal conditions.

The maximum number of persons allowed on the craft, listed on the capacity plate, applies under normal conditions, and care must be used in any other-than-normal conditions. Check the capacity plate on your boat and keep to the limits. An overloaded boat will handle differently from a lightly loaded one.

PASSENGER SAFETY

Whenever you are going for an outing, make sure that at least one passenger is familiar with the operation and safety aspects of the craft in case of emergency. The operator of the craft is responsible for the safety of the passengers as well as his/her own safety. The operator MUST sit in the driver’s seat while the craft is moving and all passengers MUST remain properly seated.

Show all passengers the location of emergency equipment and explain how to use it. DO NOT allow passengers to drag their feet or hands in the water, or sit on the bow, bow pulpit, deck or gunwale while the engine is running. Make sure all passengers are properly and securely seated in appropriate seating locations before starting.

VISIBILITY

⚠ WARNING

Obstructed visibility can cause death or serious personal injury. Maintain clear visibility at all times.

Arrange passengers and equipment for maximum visibility or designate a passenger to assist when visibility is limited.

The operator of the craft is responsible by law to “maintain a proper lookout by sight and hearing.” The operator must make sure that he/she has an unobstructed view particularly to the front. No passengers or equipment should block the operator’s view.

Look before turning, especially when you are turning around to pick up a water sports participant. Others may not be following the “Rules of the Road.”

Keep a visual check for crafts around and behind you. This is an area where accidents can happen very quickly.

The craft should not be driven faster than what it will take to bring it to a full stop within the other operator’s field of view.

TRAILERING

⚠ WARNING

Loss of control from pulling a load that exceeds the trailer’s or vehicle’s towing capacity can cause death or serious personal injury. The trailer must be matched for the boat’s weight and hull and the towing vehicle must have the capability of pulling the load.

Improper trailering can damage your craft. Selecting the correct trailer and using it properly ensures adequate support for the hull, safe and easy towing, and smooth unloading and loading in any weather.

The trailer for your CROWNLINE boat should be designed to carry the full weight of your craft and engine. Never overload your trailer by storing excess baggage, camping equipment or other gear in the craft. Make sure to check the certification label on the frame of the trailer for the Gross Vehicle Weight Rating (GVWR). The total weight of your craft, engine, fuel, gear and trailer should not exceed the GVWR. Your CROWNLINE dealer can help you select the trailer that will best fit your craft.

On older trailers, proper adjustment of the side support pads is critical each time the craft is loaded. Newer trailers feature side supports that are self-adjusting.

Periodically inspect your trailer to make sure the side supports are in proper working condition and the tire pressure is correct for the load.

IMPORTANT: The side supports should only be tight enough to keep the craft from leaning side to side. Any unnecessary pressure can damage the hull.

Make sure that the weight-distribution hitch on your vehicle is capable of handling the GVWR. The weight on the trailer should be evenly distributed and can be checked by determining the tongue weight. Tongue weight is measured as a percentage of the total weight of the loaded trailer on its tongue. Ideal tongue weight is not less than 5% and not more than 10% of the GVWR. For example, if the weight of the loaded trailer is 3000 pounds (1361 kg), the weight on the tongue should be more than 150 pounds (68 kg) but less than 300 pounds (136 kg). Excessive tongue weight will cause the front end of the towing vehicle to sway. Insufficient tongue weight will cause the trailer to sway or fishtail.

Most trailers with a GVWR of 1500 pounds (680 kg) or greater are required to have brakes, although this requirement may vary from state to state. Check with your CROWNLINE dealer for additional information.

Your craft should be fastened to the trailer with the winch line connected to the bow eye, PLUS a bow tie-down to the winch stand or trailer tongue. A safety chain or strap can be used as a suitable tie-down. The stern of your craft should be secured to the trailer from the stern eyes. If travel conditions require, use an additional tie-down strap across the rear of the craft from side to side to further secure the stern. Check all strapping material for damage or wear.

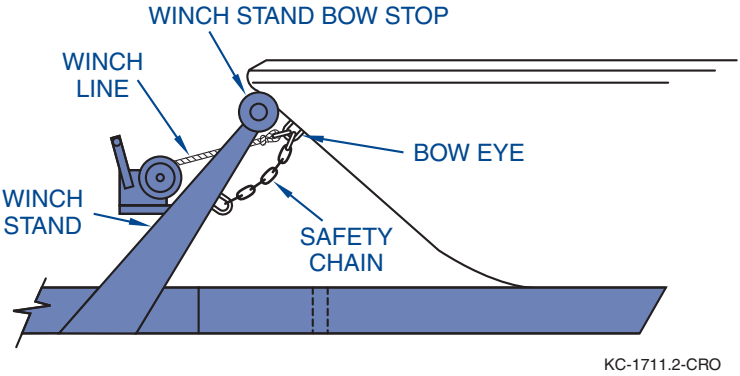

Figure 3-1

When making turns on highways or streets, do not cut corners. Also, slow down over railroad tracks and bumps.

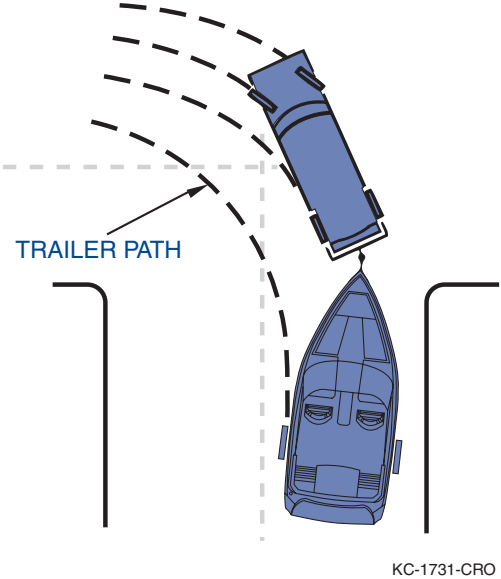

Figure 3-2

Backing Up Trailers

If you have never towed a trailer before, take the time to practice backing your trailer before using it for the first time. Follow these guidelines when backing:

- Back slowly and make small steering adjustments.
- Turn the vehicle wheels in the opposite direction you want the trailer to go.
- After the trailer begins moving, turn the vehicle to follow it.
- Have a second person assist you with hand signals.

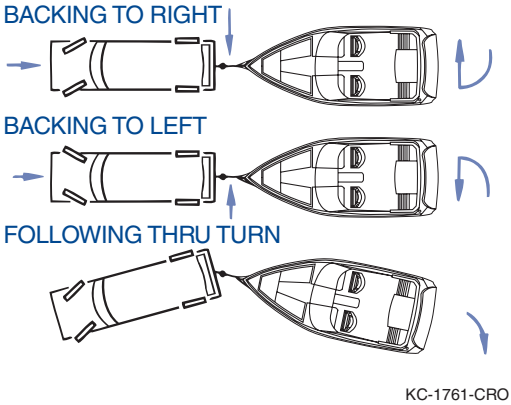

Figure 3-3

LAUNCHING

1. Remove the boat cover, if equipped.
2. Check that bilge drain plug is in place.
3. Remove any additional trailering tie-downs from the craft.
4. Attach the bow and stern docking lines and fenders if necessary.
5. Disconnect the trailer lights from the car.

Launching with two people is recommended. Since all launches are different from each other in some way, the following procedure must be modified to fit the launch in use:

1. Back the craft down the ramp until the wheels are at least halfway submerged. Keep the trailer/car combination as straight as possible and at 90 degrees to the shoreline.
2. Loosen and detach the bow strap from the bow eye.
3. Back the craft further down until the top of the fenders is about 2 in. (50 mm) above the water.
4. Board the craft and start it. Refer to START-UP in this section for proper start-up procedure. If possible, remain on the trailer until the engine has warmed up.

At the Launch

Before launching your craft, stay to one side and watch a couple of launchings to notice any problems on the ramp and the effects of the wind and current on launching. It is a common courtesy to prepare the craft for launching away from the ramp, especially during busy periods. Perform the pre-launch sequence as follows:

1. Before backing your craft onto the ramp:
   a. Remove all tie-downs.
   b. Store all loose gear properly.
   c. Inventory your safety equipment.
   d. Lock winch and trailer unit.
   e. Make sure the drain plug is in.
   f. Tilt drive unit up to clear the ramp.
   g. Disconnect vehicle to trailer wiring.
2. Have someone on the ramp give you directions. Back slowly down the ramp.

IMPORTANT: If you do not have experience in backing a trailer, then **practice**. Take your trailer to an open area and get accustomed to using it before you get into a confined launch site. Refer to Backing Up Trailers.

3. When the craft's transom is in several inches of water:
   a. Stop the towing vehicle, shift transmission to park, turn OFF the engine and set the parking brake.
   b. Disconnect the launching cable.
   c. Attach the bow line to the craft.

IMPORTANT: Be sure to hold onto the bowline so your craft does not drift away.

   d. If transporting your CROWNLINE on a "bunk"-type trailer, back trailer into water until propeller is under water. Tilt drive unit down, start engine, place gear shift in reverse and slowly drive craft off trailer into the water.

IMPORTANT: If using a "roller"-type trailer, back trailer into water until stern is touching water. Manually push craft down rollers and off trailer into the water.

   e. Board the craft and start it. If possible, remain on the trailer until the engine has warmed up.
   f. Tie craft to the pier.
4. Pull away and safely park your vehicle and trailer.

LOADING THE BOAT AND WEIGHT DISTRIBUTION

The maximum load your CROWNLINE boat can safely handle is found on the capacity plate near the helm, if applicable. When loading your CROWNLINE boat, remember to stay within the stated capacity and distribute the load evenly, keeping it low to the deck. Keep in mind, that besides evenly distributing the persons and gear weight for the best performance, fuel, water, waste, gray water tank's capacities at various levels affect the performance and a craft's listing characteristics.

The engine(s) have been installed according to the engine manufacturer's height recommendations and specifications. If the engine-to-waterline height exceeds the engine exhaust elbow's height, water can enter the engine through the exhaust and can cause engine damage. Distribute the maximum weight capacity evenly in the cockpit and cabin. Do not concentrate the load in the back areas of the cockpit or swim platform. This could cause the stern to sink to the point that water intrudes through the engine exhaust elbows. Always secure loose items so they do not shift or slide while you are on the water. When loading your craft, always step onto the craft; never jump. Have someone on the dock pass any gear aboard.

⚠ WARNING

Overloading the boat at the stern can cause death, serious personal injury and property damage. High bow angles can produce high levels of carbon monoxide, reduce visibility and boat stability, and cause water intrusion. DO NOT overload the boat.

⚠ CAUTION

Overloading or improper weight distribution on-board can make your craft difficult to handle. Bad weather or rough seas could significantly reduce the stated capacity. Overloading a boat is a violation of U.S. Coast Guard regulations.

IMPORTANT: All boats over 20 ft (6.1 m) are not subject to U.S. Coast Guard safe loading or labeling requirements. It is the boat operator's responsibility to execute prudence, good judgment and common sense in maintaining safe load limitations at all times.

Passengers should board the boat one at a time and find a seat. Passengers should remain seated during loading of the boat to maintain an even trim.

⚠ WARNING

Ejection from boat, man overboard or exposure to carbon monoxide can cause death or serious personal injury. Keep passengers seated and do not allow passengers to ride on the bow, cabin deck, gunwale, engine hatch or swim platform while underway.

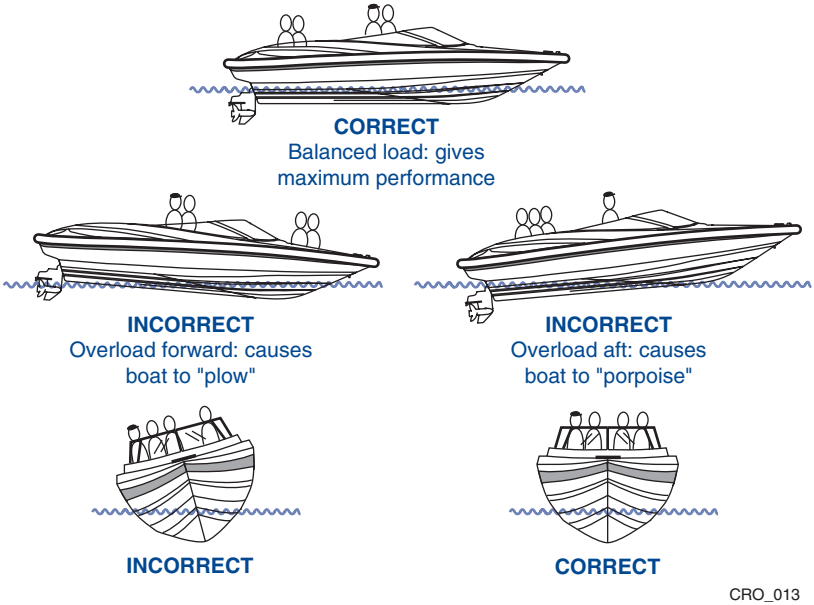

Figure 3-4

FUELING

Inspect the fuel system for leakage, deteriorating, hardening, swelling or corrosion of fuel system components, including fuel tank, fuel line, fittings, fuel filter and fuel delivery system on the engine. Any problems must be corrected immediately. If you suspect your fuel system to be faulty, contact your CROWNLINE dealer immediately.

⚠ DANGER

Explosion or fire hazard. Gas is extremely flammable and highly explosive under certain conditions. Turn the engine OFF and DO NOT smoke or allow open flames or sparks within 50 ft (15 m) of the fueling area. Check your craft for fuel leaks and fumes before, during and after each use. Maintain contact between the fuel nozzle and the fuel tank to prevent electrostatic spark. DO NOT use a plastic funnel.

NOTE: To prevent engine damage not covered by warranty, refer to your Engine Operation and Maintenance Manual for recommended fuel type, octane rating and fuels extended with alcohol or alcohol derivatives. Refer to **Section 4, Fuel System**.

Preliminary Procedures

Make sure the fuel fill plate is the only location fuel is added. DO NOT use any other fill plate for the fuel fill plate.

⚠ DANGER

Fire or explosion hazard from fumes or spilled fuel. DO NOT overfill the fuel tank or allow fuel to spill into the craft or bilge.

Avoid fueling at night, except under well-lit conditions.

1. Safely moor your craft to the dock.
2. Make sure all passengers are onshore.
3. Turn OFF all electrical equipment, engine, generator, air conditioner, appliances, lights, bilge pump and blower, etc.
4. Extinguish all flames or smoking materials.
5. Close all hatches, windows, doors and compartments.
6. Ensure a fire extinguisher is close by.

Be careful to not spill gasoline. If gasoline is accidentally spilled, wipe it up with dry rags and dispose of the rags properly ashore. Spilled fuel can discolor the craft's finish and can damage trim.

After fueling

1. Tighten the fuel filler cap. Wipe up any spilled fuel.
2. Check all fuel lines, hoses and connections for leaks and deterioration.

NOTE: Each time you refuel, inspect all fuel lines, hoses and connections for leaks and deterioration.

GETTING UNDERWAY

When preparing for your boating trip, make your boating trip safe and enjoyable by using good judgment. You are responsible for the safety of all passengers, your craft and any damage the craft or its wake may cause. DO NOT allow your passengers to block your view from aids to navigation and prevent you from protecting other crafts, swimmers, water skiers and other crafts.

Before Starting Checklist

⚠ WARNING

Operating the boat if any problem is found during this inspection can cause death or serious personal injury. DO NOT operate the boat if any problem is found during this inspection.

Establish a standard when performing your checklist. Getting into a routine will provide you and your passengers a safe boating experience. Perform your checklist before you start the engine(s). Any problems found should be corrected by your CROWNLINE dealer.

- ❏ Check the weather report, wind and water conditions.
- ❏ Check that required safety equipment and PFDs are on-board and in proper operating condition.
- ❏ Make sure your craft is not overloaded.
- ❏ Make sure your visibility is not obstructed.
- ❏ Make sure any problems found prior have been corrected.
- ❏ Make sure you have an adequate supply of fuel for your outing.
- ❏ Make sure to check the fuel system for leaks and fumes.

HELMS, INSTRUMENTATIONS AND CONTROLS

Your CROWNLINE may have more or fewer instruments and controls than those shown in the following illustrations based on how your CROWNLINE was built. A description of the instruments and controls follows the illustrations. The topic will appear in alphabetical order.

Helms

180 BR, 19 SS

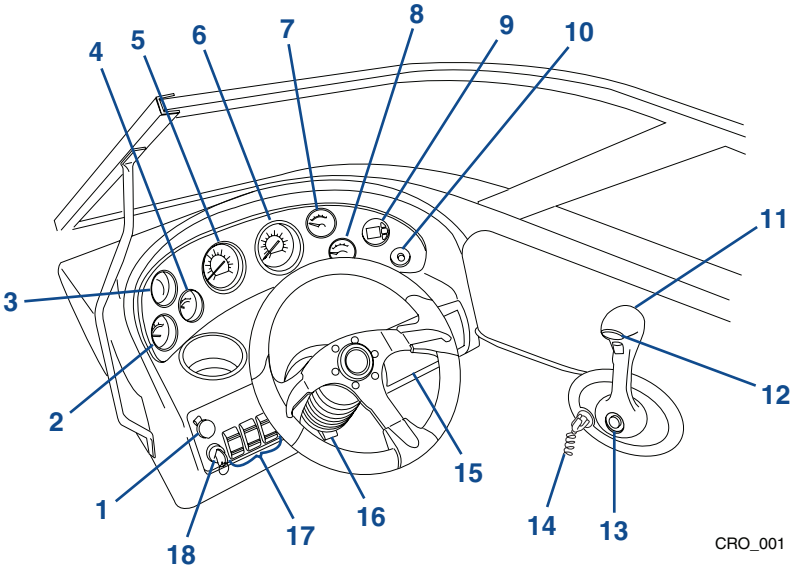

Figure 3-5

1. 12-Volt Accessory Port
2. Engine Temperature Gauge
3. Power Trim Gauge
4. Voltage Gauge
5. Tachometer
6. Speedometer
7. Fuel Gauge
8. Oil Pressure Gauge
9. Depth Sounder
10. Horn
11. Throttle and Gear Shift Control
12. Drive Unit Trim Switch
13. Neutral Detent
14. Engine Stop Switch
15. Stereo
16. Steering Wheel Tilt
17. Navigation/Anchor, Bilge, Bilge Blower – Switch
18. Ignition Switch (Key)

21 SS, LPX package; upgrade for 180 BR and 19 SS

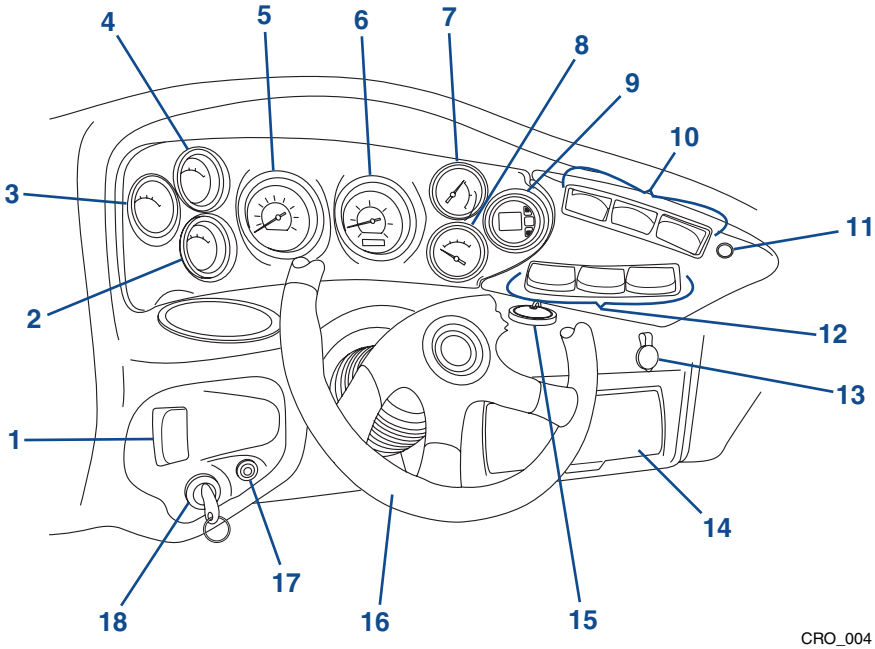

Figure 3-6

1. Bilge Blower Switch
2. Oil Pressure Gauge
3. Engine Temperature Gauge
4. Voltage Gauge
5. Speedometer
6. Tachometer
7. Power Trim Gauge
8. Fuel Gauge
9. Depth Sounder
10. Navigation/Anchor, Bilge, Courtesy Lights – Switch
11. Horn
12. Accessory, Exhaust, Docking Lights – Switch
13. 12-Volt Accessory Port
14. Stereo
15. MP3 Port
16. Steering Wheel Tilt
17. Circuit Breaker
18. Ignition Switch (Key)

Throttle and Gear Shift Control, Drive Unit Trim Switch, Neutral Detent and Engine Stop Switch not shown

200, 210

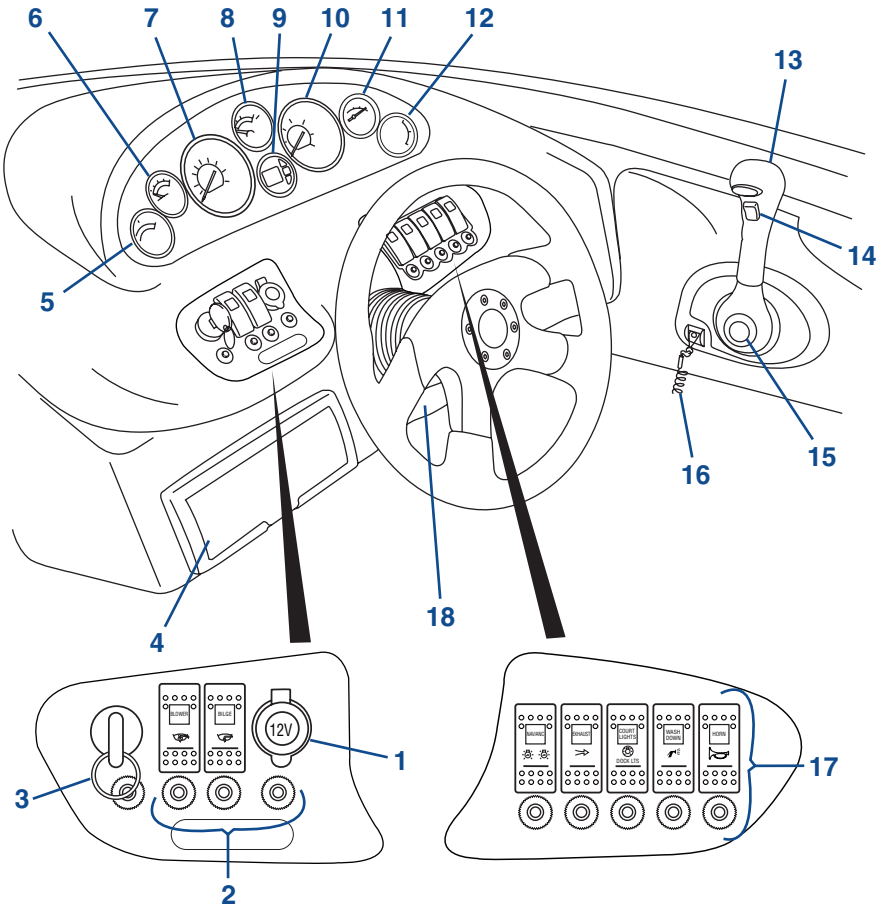

Figure 3-7

1. 12-Volt Accessory Port
2. Bilge Blower, Bilge Switch and Circuit Breakers
3. Ignition Switch (Key) and Circuit Breaker
5. Voltage Gauge
6. Fuel Gauge
7. Speedometer
8. Power Trim Gauge
9. Depth Sounder
10. Tachometer
11. Oil Pressure Gauge
12. Engine Temperature Gauge
13. Throttle and Gear Shift Control
14. Drive Unit Trim Switch
15. Neutral Detent
16. Engine Stop Switch
17. Navigation/Anchor Lights, Exhaust, Courtesy Lights, Wash-down, Horn – Switches and Circuit Breakers
18. Steering Wheel Tilt

220, 240, 260 Deck Boats

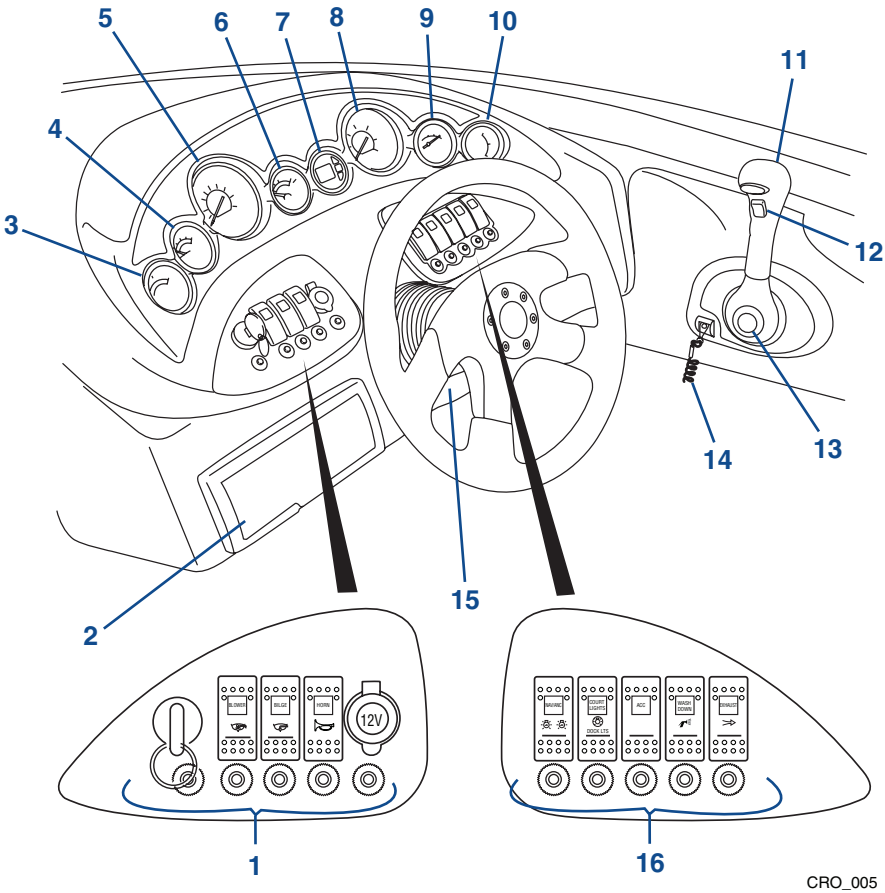

Figure 3-8

1. Ignition, Bilge, Bilge Blower, Horn – Switch, 12-Volt Accessory Port, Circuit Breakers
2. Stereo
3. Engine Temperature Gauge
4. Oil Pressure Gauge
5. Speedometer
6. Fuel Gauge
7. Depth Sounder
8. Tachometer
9. Voltage Gauge
10. Power Trim Gauge
11. Throttle and Gear Shift Control
12. Drive Unit Trim Switch
13. Neutral Detent
14. Engine Stop Switch
15. Steering Wheel Tilt
16. Navigation/Anchor, Docking Lights, Accessory, Wash-Down Exhaust – Switch

220, 235 Cuddy

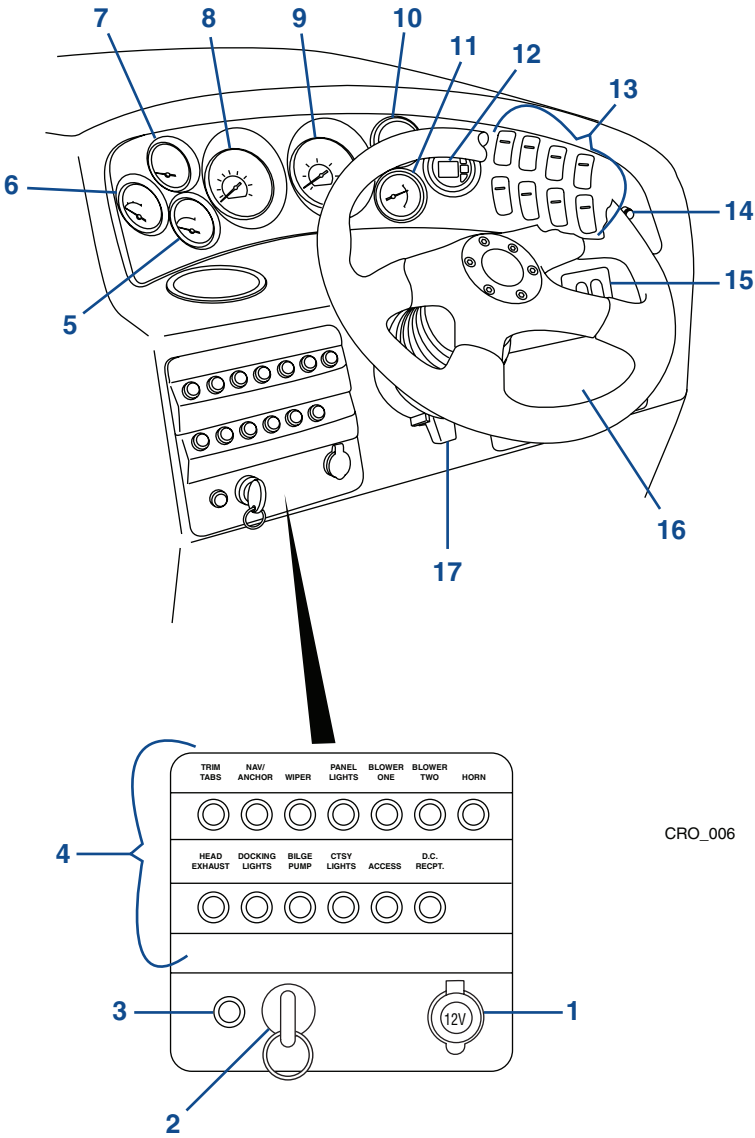

Figure 3-9

1. 12-Volt Accessory Port, 12-Volt Accessory Circuit Breaker
2. Ignition Switch (Key)
3. Ignition Switch Breaker
4. Circuit Breaker Panel – panel labels the circuit it protects
5. Engine Temperature Gauge
6. Voltage Gauge
7. Oil Pressure Gauge
8. Speedometer
9. Tachometer
10. Fuel Gauge
11. Power Trim Gauge
12. Depth Sounder
13. Navigation/Anchor, Courtesy, Panel Lights; Docking Lights, Bilge Blower, Bilge, Accessory, Windshield Wiper – Switches
14. Horn
15. Trim Tabs Controls
16. Stereo
17. Steering Wheel Tilt

Throttle and Gear Shift Control, Drive Unit Trim Switch, Neutral Detent and Engine Stop Switch not shown

250, 270 Cruiser, 255, 275 Cuddy

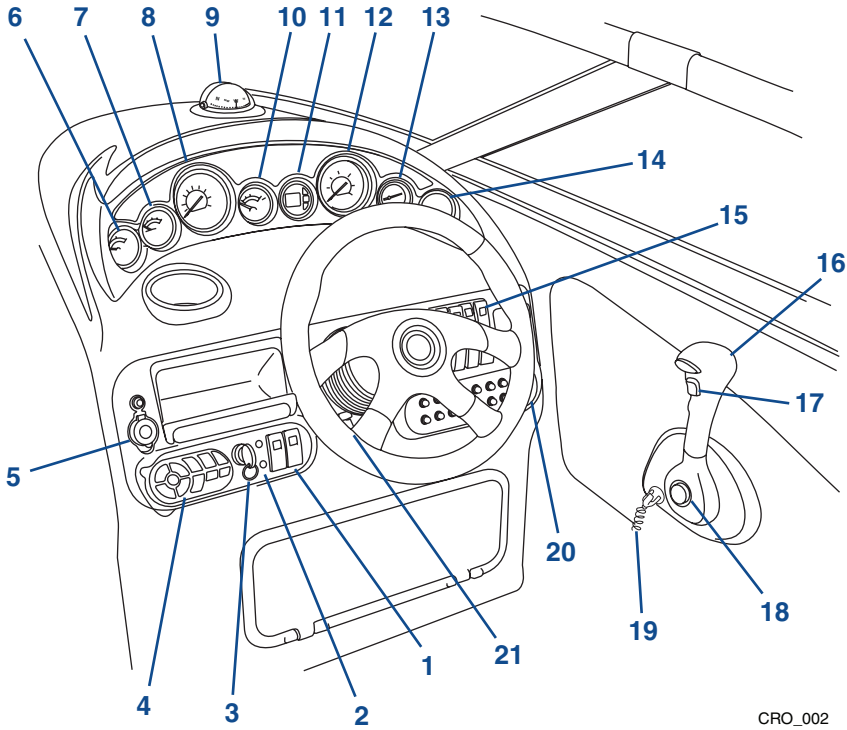

Figure 3-10

1. Bilge Blower, Bilge Switches
2. Bilge Blower Energized System Indicators
3. Ignition Switch (Key)
4. Stereo Remote
5. 12-Volt Accessory Port, 12-Volt Accessory Circuit Breaker
6. Engine Temperature Gauge
7. Oil Pressure Gauge
8. Speedometer
9. Compass
10. Fuel Gauge
11. Depth Sounder
12. Tachometer
13. Power Trim Gauge
14. Voltage Gauge
15. Fire Extinguisher System, Fire Extinguisher System Circuit Breaker; Switch Panel – Navigation/Anchor, Courtesy, Panel, Panel, Engine Room Lights; Horn, Windshield Wiper, Social Swim; Exhaust; Engine Hatch; Windlass – Switches; Trim Tab Controls
16. Throttle and Gear Shift Control
17. Drive Unit Trim Switch
18. Neutral Detent
19. Engine Stop Switch
20. Circuit Breaker Panel – panel labels the circuit it protects
21. Steering Wheel Tilt

270

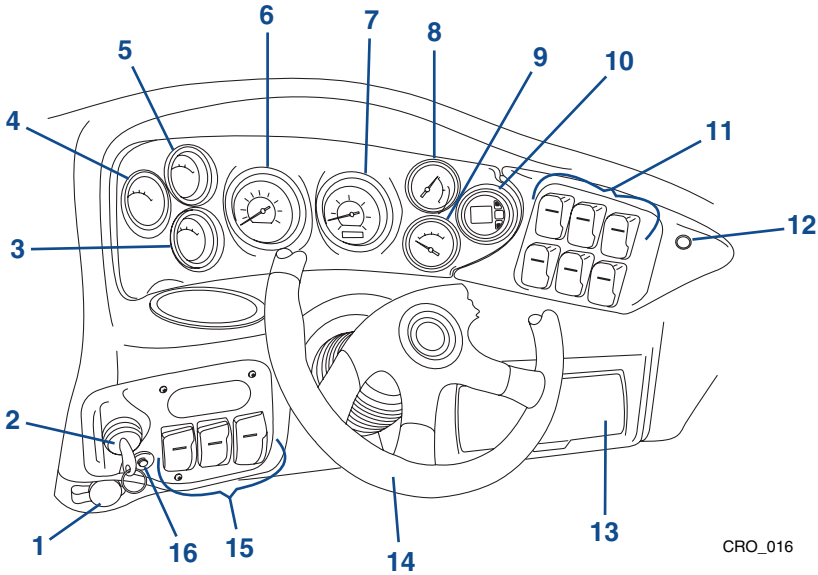

Figure 3-11

1. 12-Volt Accessory Port
2. Ignition Switch (Key)
3. Oil Pressure Gauge
4. Engine Temperature Gauge
5. Voltage Gauge
6. Fuel Gauge
7. Speedometer
8. Tachometer
9. Power Trim Gauge
10. Depth Sounder
11. Panel, Courtesy Lights; Accessory; Water Pump; Docking Lights; Exhaust – Switches
12. Horn
13. Stereo
14. Steering Wheel Tilt
15. Bilge Blower, Bilge, Navigation/Anchor Lights – Switch
16. Ignition Switch (Key) Circuit Breaker

Throttle and Gear Shift Control, Drive Unit Trim Switch, Neutral Detent and Engine Stop Switch not shown

320 Bowrider

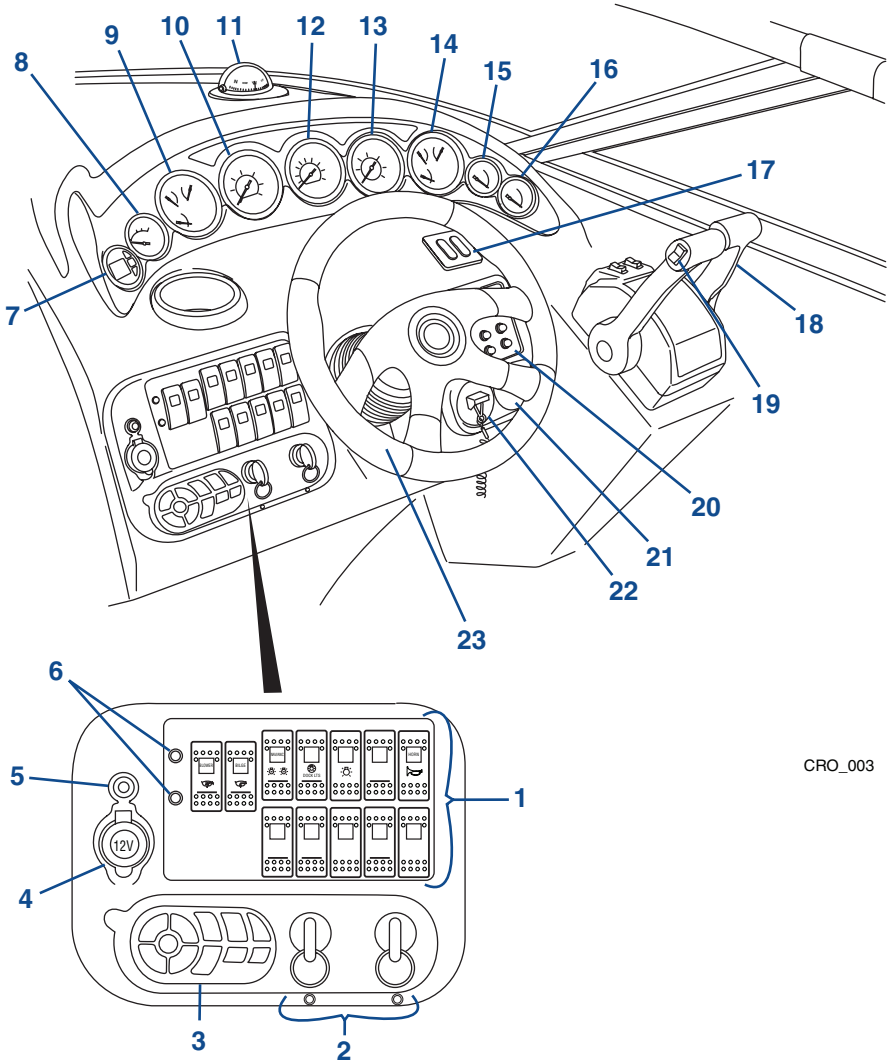

Figure 3-12

1. Bilge Blower, Bilge; Navigation/Anchor, Courtesy, Panel, Engine Room Lights; Horn; Windshield Wiper; Docking Lights; Exhaust; Engine Hatch; Windlass – Switches
2. Ignition Switches (Keys)
3. Stereo Remote
4. 12-Volt Accessory Port
5. 12-Volt Accessory Circuit Breaker
6. Bilge Blower Energized System Indicators
7. Depth Sounder
8. Fuel Gauge – Port Engine
9. Engine Temperature, Oil Pressure, Voltage Gauge – Port Engine
10. Tachometer – Port Engine
11. Compass
12. Speedometer
13. Tachometer – Starboard Engine
14. Engine Temperature, Oil Pressure, Voltage Gauge – Starboard Engine
15. Power Trim Gauge – Port Engine
16. Power Trim Gauge – Starboard Engine
17. Trim Tab Controls
18. Throttle and Shift Controls
19. Drive Unit Trim Switches
20. Circuit Breaker Panel – panel labels the circuit it protects
21. Fire Extinguisher System
22. Engine Stop Switch
23. Steering Wheel Tilt

INSTRUMENTATIONS AND CONTROLS

Ask your CROWNLINE dealer about the normal ranges and readings of the gauges for the power package installed on your craft. When boating, always monitor the gauges and promptly investigate any abnormal readings.

12-Volt Accessory Circuit Breaker

Protects the 12-volt accessory port from an overload. Refer to Circuit Breaker(s).

12-Volt Accessory Port

This 12-volt port allows you to power or charge cellular phones, video cameras, other 12-volt electronics or an MP3 player. DO NOT use any device which exceeds 10 Amps.

Accessory Switch

The accessory switch supplies switched power to your craft's accessories. When using your craft's accessories, start your engine occasionally to allow the engine alternator to recharge the battery. Otherwise, you may drain the battery and you will not have enough power to start the engine. When not in use, make sure all accessory and light switches are turned to the OFF position to eliminate battery discharge. Limit the accessory to 10 Amps.

Bilge Blower Switch

The bilge blower switch activates the engine compartment ventilation system (bilge blowers). When the LED is illuminated, the system is ON. The craft operator should check in the engine compartment to make sure the blower is working properly.

Bilge Blower Indicators

The bilge blower indicators indicate that the blower system is energized. The craft operator should check in the engine compartment to make sure the blower is working properly.

Circuit Breaker(s)

Circuit breakers protect the labeled circuit. These circuits are protected from overload by the use of circuit breakers. In the event of an overload or short circuit, circuit breaker will trip. If a circuit continuously overloads under normal operating conditions, contact your CROWNLINE dealer immediately. Some models have individual circuits protected with a circuit breaker located next to the switch. To reset a tripped circuit breaker, switch OFF the circuit, wait about one minute for the breaker to cool, push the breaker button fully, and switch ON the circuit.

NOTE: The electrical system is designed to protect you from short circuits and overload. Any modifications to the system, such as adding electrical accessories, should be done by a qualified technician.

Compass

Various factors affect the operation of the compass, such as local magnetic variation and deviation (induced needle deflection caused by metal components and the operation of electrical equipment on-board your craft). Each compass must be compensated to adjust for the specific characteristics of each craft. It is vitally important you have your compass professionally compensated before using it for marine navigation. Contact your CROWNLINE dealer regarding compass compensation.

IMPORTANT: The compass should be re-compensated when having additional electrical equipment installed on your craft.

Courtesy Light Switch

The courtesy light switch controls the ON or OFF operation mode of the courtesy lights.

Depth Sounder

The depth sounder allows you to monitor the lake, river or ocean floor. Some of the options are: shallow water, depth, keel depth and units. Refer to the manufacturer's literature for more detailed information.

Docking Lights Switch

The docking lights switch controls the ON or OFF operation mode of the courtesy lights.

Drive Unit Trim Switch

The drive unit trim switch activates the power trim feature of the engine. Push and hold the switch UP or DOWN until the drive unit is at the desired angle. Use this switch in combination with the trim gauge to monitor the optimum performance location for the load.

Engine Hatch Switch

⚠ WARNING

An engine guard which is not in place or in contact with any moving parts can cause death or serious personal injury. The engine box cover is a machinery guard. DO NOT operate your boat without the cover closed and in place unless you are performing a check or maintenance. Keep your hands, clothing, hair and any other body parts away from any moving parts.

The engine hatch switch controls the UP or DOWN operation of the engine hatch. DO NOT continue to operate the switch when the engine hatch is closed or fully open. Damage to the system will occur. Lower the hatch support when the hatch is opened. Be sure to return the support to its stowed position before lowering the hatch.

Engine Hour Meter

The engine hour meter operates automatically as a timing device and records engine running time. The operation is very similar to the odometer in your personal vehicle. By observing the actual operating time of the engine, you can determine service and maintenance intervals. The engine hour meter is located at the helm dash, in the engine compartment or in a cockpit storage compartment.

NOTE: DO NOT leave the ignition key ON with the engine OFF. This will automatically activate the meter and increase the engine operating time.

Engine Room Lights Switch

The engine room light switch controls the ON or OFF operation mode of the engine room lights.

Engine Stop Switch

⚠ DANGER

An engine stop switch system that is not used or does not function properly will cause death or serious injury. DO NOT operate the boat if the engine stop switch system does not function properly.

The spring-loaded engine stop switch will automatically shut down the engine during emergency situations, if activated, to prevent uncontrolled or unattended operation. Certain emergency conditions (e.g., turbulent water, wakes, accidental shove) may impair a person's ability to operate the craft safely. The switch, located on the helm, dash or the shift control, must be pulled from its normal position, and a plastic clip (with attached lanyard) must be placed between the knob of the switch and its base. This activates the protective shutdown circuitry.

Securely attach the other end of the lanyard to the craft operator. If the operator moves, falls or is at an unsafe distance from the steering wheel, tension on the lanyard will pull it from the plastic housing. When the plastic housing is removed, the engine stop switch is released and automatic engine shutdown occurs. See **Figure 3-13**.

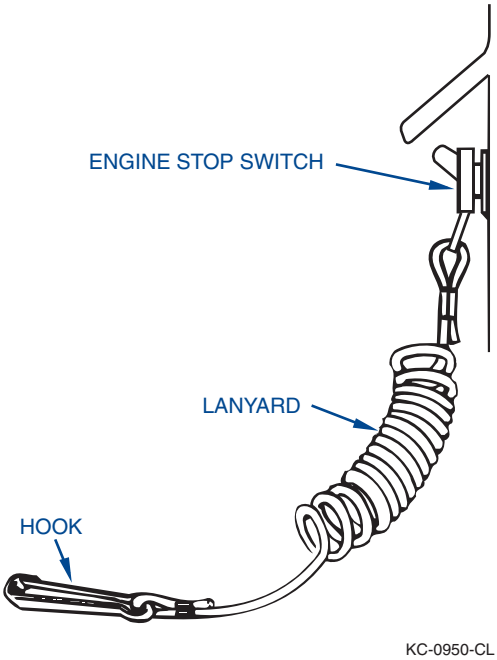

Figure 3-13

Engine Temperature Gauge

The engine temperature gauge monitors the cooling system of the engine. A sudden increase in the temperature could indicate a blocked cooling passage or a water pump malfunction. Always check the gauge immediately after starting the engine.

Marine engines draw external water and circulate it through the heat exchanger on the engine, then pump it overboard through the exhaust system. If the temperature gauge is high, STOP the engine immediately. Refer to your Engine Operation and Maintenance Manual for instructions and corrective action.

Exhaust Switch

The exhaust switch controls the operation mode of the optional exhaust system.

Fire Extinguisher System Monitor

The fire extinguisher system monitor has an indicator lamp to indicate fire extinguisher system status. The lamp should glow when the ignition switch is in the ON position, indicating a charged system. Should the system discharge, the lamp will not glow. Refer to the manufacturer's literature.

Fuel Gauge

The fuel gauge shows the level of fuel present in the fuel tank. The ignition switch must be ON when checking the fuel level. There will be a more accurate reading when the craft is level. At normal speeds, the fuel gauge will usually read higher due to the angle of the bow.

Because fuel gauge readings are approximate, you should use the One-Third Rule. One-third of your total fuel should be used to travel to your destination and one-third to return. The remaining one-third is reserved for emergencies.

Horn Switch

The horn switch is a momentary button to control the horn. The horn will sound as long as the switch is pressed.

Ignition Switch Breaker

The ignition switch breaker protects the ignition switch from an overload. Refer to Circuit Breaker(s).

Ignition Switch (Key)

Operation of the ignition switch (key) will START and STOP the engine. Refer to your Engine Operation and Maintenance Manual for diesel operation.

START - turn the ignition switch to START position; once engine is started, turn switch to RUN position.

RUN - the ignition switch in RUN position should only be used when your engine is actually running. Engine running also allows your craft's engine alternator to recharge the battery while you run your craft. If the switch is allowed to remain in the RUN position without the engine running, this will discharge your battery and increase the engine operating time on the hour meter.

OFF - the ignition switch should always be in the OFF position when the craft is not in use or power is not required.

MP3 Port

The MP3 port allows you to connect your MP3 player to the craft's stereo system.

Navigational/Anchor Light Switch

This three-position switch controls the ON or OFF operation mode of the navigational lights and anchor light. The FORWARD position operates the navigational lights. The AFT position operates the anchor light only, for mooring. Middle position is the OFF position.

The law requires the bow light(s) and the 360 degree light (located near the stern) to be ON while running the boat after sunset or before dawn.

⚠ WARNING

Blocking navigational lights can cause death or serious personal injury. DO NOT block the navigational lights.

Neutral Detent Button

The neutral detent button allows the throttle to be advanced without shifting the transmission. Refer to the manufacturer's literature for more detailed information.

Oil Pressure Gauge

The oil pressure gauge can be used as an early indicator of a potential engine problem. It provides an indication of the pressure in the engine lubrication system. A preset valve in the oil pump controls the maximum oil pressure. A drop in oil pressure is a possible indication of oil pump or leakage problems, low oil level or high engine temperature.

NOTE: If a complete loss of oil pressure occurs, STOP the engine immediately. Serious damage will occur if the engine continues to run after loss of oil pressure.

Panel Lights Switch

The panel lights switch controls the ON or OFF operation mode of the panel lights.

Power Trim Gauge

The power trim gauge provides a visual indication of the inward-outward position of the engine's outdrive. This switch will maximize the performance and ride of the craft. When combined with optional trim tabs, the ride can achieve more performance.

Speedometer

The speedometer registers forward speed in miles per hour (MPH). You can also use the speedometer to monitor fuel consumption and your propeller's performance.

Spotlight Switch

The spotlight switch controls the ON or OFF operation mode of the spotlight. It also activates the remote control for side-to-side and up-and-down positioning. Refer to the manufacturer's literature for more detailed information.

Steering Wheel Tilt

The steering wheel tilt lever adjusts the wheel angle to a more comfortable position for the operator. DO NOT adjust the tilt angle when the craft is moving.

Stereo

Refer to the manufacturer's literature for more detailed information.

Stereo Remote

The stereo remote allows the stereo to be controlled at the helm.

Tachometer

The tachometer gauge indicates the speed of the engine in revolutions per minute (RPM). This speed is not the craft speed or necessarily the speed of the propeller. The tachometer may not return to zero with the ignition key in the OFF position, but will return to zero when the ignition switch is turned ON.

Trim Tab Controls

Push the trim tab rocker switches in half-second bursts. Holding the rockers down too long will over-trim the boat.

The trim tab switches are used to correct the trim of your boat while you are underway.

- To trim the bow of your boat down, push the top halves of both switches.
- To trim the bow of your boat up, push the bottom halves of both switches. Refer to **Trim Tabs**.

Voltage Gauge

The voltage gauge monitors battery condition and alternator performance. Under normal engine running conditions (1000 RPM or higher), the voltage will range between 12.0 to 15.5 volts when the alternator is charging. The batteries are fully charged if the voltage gauge reading is high when the engine is not running and the ignition key or switch is ON.

Significantly higher or lower readings show a battery problem, alternator malfunction or heavy drain on the battery. An oscillating reading shows a loose wiring connection or loose belts. Displayed low voltage readings after stopping engine shows a bad battery or large battery load.

Wash-Down Pump Switch

The wash-down pump switch controls the ON or OFF operation mode of the wash-down shower pump. To prevent damage to the pump, make sure both the seacock and the shower wand, or spigot, is open before turning ON the system.

Windlass Switch

The windlass switch controls the ON or OFF operation mode of the windlass. Refer to the manufacturer's literature for more detailed information.

Windshield Wiper Switch

The windshield wiper switch controls the ON or OFF operation mode of the windshield wiper.

THROTTLE AND GEAR SHIFT CONTROLS

⚠ WARNING

Improperly maintained controls are hazardous and could cause sudden loss of control. Make sure all throttle/gear shift hardware and cables are regularly inspected and maintained.

The throttle control regulates the engine RPM. **Throttle** is achieved by advancing the control forward or backward. Idle in gear is at the closest position to NEUTRAL or in NEUTRAL. Moving the throttle lever forward of NEUTRAL increases forward engine speed and moving the throttle lever backward of NEUTRAL increases reverse engine speed.

Gear Shift - NEUTRAL is in the center detent position; push for FORWARD, pull back for REVERSE. Refer to the manufacturer's literature for more detailed information.

⚠ WARNING

Swamping boat or engine hazard. DO NOT accelerate at a high level in reverse. This could create a wake that could enter the craft over the transom.

NOTE: DO NOT accelerate to full throttle until after the proper "engine break-in period." Read the engine owner's manual and follow the correct engine break-in period. When shifting between forward and reverse, always pause in NEUTRAL for a few seconds before reversing the rotation of the propellers, then shift briskly from NEUTRAL into FORWARD or REVERSE. This will prevent unnecessary wear to the drive system.

IMPORTANT: When maneuvering forward at low speeds, shifting the engine into NEUTRAL and then REVERSE can assist in slowing the craft. Allow engine to slow to idle speed before shifting into reverse.

STEERING

⚠ WARNING

Improperly maintained controls are hazardous and could cause sudden loss of control. Make sure all steering hardware, cables and fluid levels are regularly inspected and maintained.

The standard steering system is a single rack-and-pinion system. Steering a boat is different from steering a car. Always use caution when turning. The stern will respond by pitching in the opposite direction of the bow.

Always use extreme caution when you are leaving the dock or trying to avoid an object in the water. Give yourself plenty of room to make a turn. Also, slow down while turning. All passengers should remain seated while underway.

Most CROWNLINE boats are equipped with power steering as a standard feature, which provides easier and more responsive steering characteristics. Refer to your Engine Operation and Maintenance Manual for more detailed information and system maintenance information.

BATTERY

⚠ WARNING

Explosion, fire or burn hazard from vented fumes or burns from battery electrolyte can cause death or serious personal injury.

- **Wear eye protection and rubber gloves when working on or around batteries.**
- **DO NOT charge or use a battery booster to start your engine.**
- **Charge the battery outside of the boat.**
- **DO NOT smoke or bring a flame near a battery at any time.**
- **DO NOT have your head directly above a battery when making or breaking electrical connections.**
- **DO NOT use a metal object to spark between battery posts to check if the battery is charged.**
- **DO NOT disconnect or reconnect battery cables if gasoline fumes are present.**

If battery electrolyte spillage occurs, immediately wash area with a solution of baking soda and water.

The battery installed in your craft supplies your craft with DC current for starting the engine and powering lights and accessories. Inspect the battery frequently for cleanliness and tight connections. Be sure that the battery compartment is well-ventilated.

Be careful when connecting or disconnecting a battery charger. Be sure the charger is turned OFF and unplugged from power source when you remove the connection.

Make sure you have a solid connection with the charging clamps.

Poor connections at the battery are common causes of electrical arcs and engine problems. Follow instructions.

DO NOT make or break electrical circuits at the battery terminals; a spark will occur when a live circuit is opened or made. Turn off all the components.

Use a voltmeter, hydrometer or your voltage gauge to check the battery charge condition.

Remove the battery cables from the battery when the boat is placed in storage or in transit.

START-UP

NOTE: If your craft's engine is carbureted, the starting procedure may be slightly different from the instructions below.

The Engine Operation and Maintenance Manual supplied with your CROWNLINE boat provides pre-start and starting instructions. The following information is a guideline and is not intended to explain, in detail, all starting procedures and instructions.

Before starting checklist:

1. Fuel supply – make sure you have enough fuel for your expected travel plan.
2. Engine fluid levels – make sure craft is level.
3. Throttle and gear shift control – detent, forward, neutral and reverse.
4. Leaks (water, fuel and oil).
5. Battery condition.
6. Visually inspect for any loose mounting fasteners.
7. Make sure the engine cooling water (raw water) valve is open and the raw water strainer is clean or coolant level of closed cooling system engine is at the correct level.
8. Make sure the engine stop switch is fully functional, the lanyard is not frayed or damaged, and the lanyard is secured to your body. Keep it attached at all times while you are driving.

⚠ DANGER

Carbon Monoxide Hazard. A cold engine produces more carbon monoxide than a warm engine. Reduce the possibility of carbon monoxide accumulation. Prevent excessive exposure and reduce the possibility of carbon monoxide accumulation by providing adequate ventilation in the cabin, cockpit and enclosed passenger areas. Open any hatches, doors, windows and side vents, when necessary, to increase ventilation.

Starting

Secure the craft to dock or mooring slip before attempting to START the engine. Craft should be kept secure until engine is warm and ready for departure.

1. Make sure the throttle and gear shift control is in the NEUTRAL position.
2. Move dual battery switch to number 1, 2 or ALL setting, if so equipped.
3. Run the bilge blower for five minutes.

⚠ DANGER

Fire or explosion hazard from fumes accumulating in bilge area. Ventilate the engine compartment by running the blower for five minutes, especially after repairing or refueling, and check for fuel spills or leaks.

An engine guard which is not in place or in contact with any moving parts can cause death or serious personal injury. The engine box cover is a machinery guard. DO NOT operate your boat with the cover open unless you are performing a check or maintenance. Keep your hands, clothing, hair and any other body parts away from any moving parts.

4. Turn the ignition key to the START position. Release the key immediately after the engine starts. If the engine fails to start, refer to Troubleshooting in your engine owner's manual.

⚠ CAUTION

DO NOT continue to operate the starter for more than 15 seconds without pausing to allow the starter motor to cool off for three minutes. This allows the battery to recover between starting attempts.

After the Engine Starts

Run the engine approximately one to two minutes at fast idle (1200 to 1500 RPM) and return to idle and normal operating temperature. This time may vary from the temperature of the cooling water. Once engine has warmed up and the RPM has returned to idle, check engine temperature gauge to make sure engine temperature is normal. If temperature reading is abnormally high, STOP engine immediately, and inspect engine to determine cause.

The voltmeter should show a reading between 12 V to 15 V while the engine is running.

Check steering operation. Turn steering wheel to FULL port and to FULL starboard.

Make sure the craft is still secure to the dock and engine is idling between 600 and 800 RPM momentarily. Move throttle and gear shift to FORWARD, then NEUTRAL and then to REVERSE, then NEUTRAL to check for proper shift operation.

Check other gauges to verify they are at normal operating ranges.

Repeat starting procedure for the second engine, if equipped. The second engine may be difficult to hear when it starts, due to the noise of the first engine. Verify the second tachometer of the second engine. When the engine RPM rises, release the ignition key immediately.

CARBON MONOXIDE

Carbon monoxide (CO) is a colorless and odorless gas produced by engines, generators and fuel burning appliances. Even with the best craft designs or construction and care in inspection, operation, and maintenance, hazardous levels of CO can still be present in accommodation spaces under certain conditions. To reduce CO accumulation, always ventilate and provide adequate ventilation to the craft interior by opening the deck hatches, windows or canvas.

⚠ DANGER

If not avoided, overexposure to carbon monoxide (CO) will cause death or serious personal injury. Gasoline engines produce carbon monoxide (CO). CO is colorless, odorless and dangerous.

Direct and prolonged exposure to CO will cause brain damage or death. Signs of exposure to CO include nausea, dizziness and drowsiness. Avoid carbon monoxide exposure to yourself and/or your passengers.

❶ Blockage of boat exhausts by obstruction.

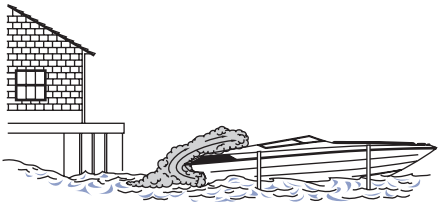

❷ Exhausts traveling along obstruction.

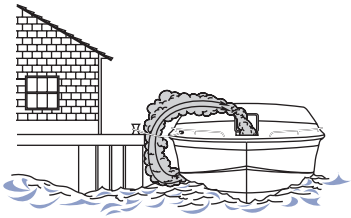

❸ Operating at slow speed or while dead in the water.

❹ Operating with high bow angle.

❺ Exhausts from other vessels in confined areas.

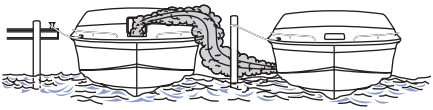

❻ Operating with canvas tops and side curtains in place without ventilation.

KC-0461-CRO

MAKE SURE TO PROVIDE ADEQUATE VENTILATION FOR CORRECT AIR MOVEMENT THROUGH BOAT!

Figure 3-14

ACCELERATION

⚠ CAUTION

DO NOT accelerate to full throttle until after the proper "engine break-in period." Read the engine owner's manual and follow the correct engine break-in period. The engine break-in period coincides with the engine checkup and FULL throttle acceleration should not take place until after this checkup.

The craft angle of trim increases and the bow rides high when you throttle UP and accelerate. Continued acceleration will reduce the trim. The maximum trim angle is commonly known as the hump. Accelerate through the hump as quickly as possible to reduce the limitation of visibility, handling and performance. This should only take a few seconds. Then throttle DOWN to cruising speed for better fuel efficiency.

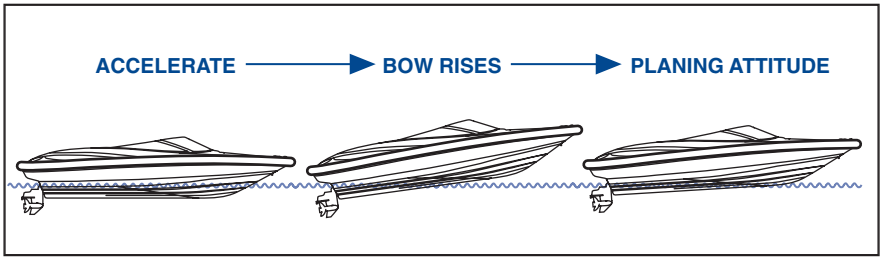

CRO_023

BOAT ATTITUDE

Figure 3-15

HIGH-SPEED OPERATION

⚠ WARNING

Quick maneuvers can cause people and objects in the boat to be thrown about, possibly resulting in death or serious personal injury. DO NOT make quick or high-speed maneuvers when you or your passengers are not prepared, and keep both hands on the controls at all times.

Use caution when operating your craft at high speed. Good experience and judgment by the operator is a must during turns and sudden turns at any speed. Passengers can be thrown from their seats and even from the boat if caution and good judgment are not exercised. Make sure the operator has enough experience with the craft before any full-throttle operation. DO NOT operate your craft until you are completely experienced or comfortable with its handling characteristics. Some guidelines to follow if you are comfortable with performance operation:

- Watch the tachometer and keep the engine within the manufacturer's operating range. Make sure the propeller is correct for the recommended RPM rating for the engine with an average boat load. Refer to your Engine Operation and Maintenance Manual.
- Know your stopping distance.
- Keep the hull clean and free of marine growth.
- Make sure all gear is stowed and compartments are latched.
- Keep weight in the boat to a minimum and evenly distributed.

High-speed operation on smooth water is very stable, but quick reactions and adjustments are needed to maintain control. Know your limits and stay within them. Always keep one hand on the steering wheel and the other on the throttle; constant adjustments are necessary for rapidly changing conditions. Small inputs of throttle and steering are exaggerated at high speeds. Depending on the speed, keep watch well ahead so you may have enough time to react.

DRIVE TRIM ANGLE

Trim angle is the angular relationship between the lower drive unit of the engine and the transom of the craft. Using the trim while underway greatly affects the craft's performance and efficiency. To use power trim effectively, always start with the engine trimmed in (DOWN, bow down). When the craft planes, increase the angle out (UP, bow up). Getting a feel for how the trim works will give you a better understanding of proper trim. For best results, the craft should be on plane and trimmed to reduce the wetted surface. With less boat in the water, both speed and fuel economy increase. The trim angle should be adjusted continuously at different ranges for best results.

If the engine is trimmed “DOWN,” speed drops, the efficiency and fuel economy decrease and the craft may not handle correctly. Trim “DOWN” provides better acceleration from a standstill because it will force the bow down. If the engine is trimmed “UP,” steering torque can increase and the propeller can cavitate (spin and not grab). This can make the craft difficult to get on plane and cause the craft to porpoise.

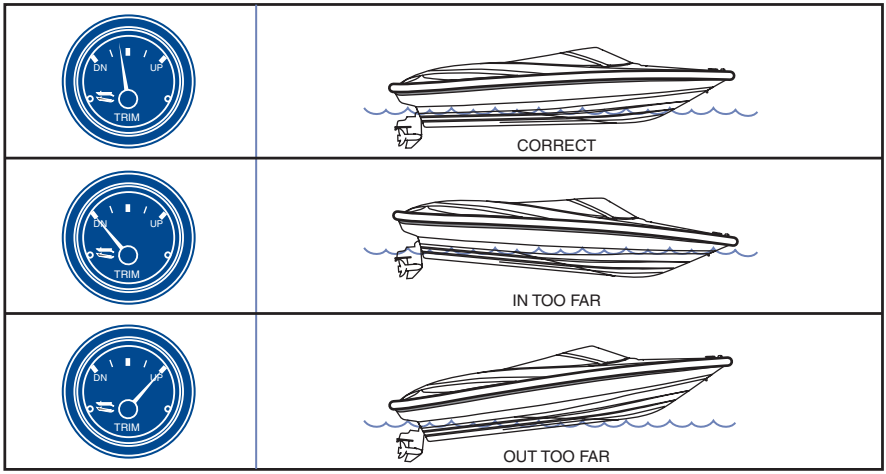

CRO_012

Figure 3-16

TRIM TABS

The electric/hydraulic trim tabs are adjusted at the helm. Water is deflected and redirected as the trim tabs move through the water and they are raised and lowered. This change in water flow creates upward pressure under the tabs and raises the stern. When the stern raises, the bow is lowered.

Trim tabs act in the same way as the power trim on the drive unit. This allows compensation for uneven loads by trimming up one side or the other. They also assist in providing maximum control of the hull in different water and load conditions. If used properly, trim tabs can greatly improve performance and fuel efficiency. The proper use of trim tabs requires a basic understanding of trim tab operation and some practice in calm water.

Your trim tab control has two (2) two-position, momentary switches labeled Bow Down and Bow Up:

- Depress front-starboard button to move trim plane on port side downward. This moves starboard bow downward when boat is planing.
- Depress front-port button to move trim plane on starboard side downward. This moves port bow downward when boat is planing.

- Depress back-starboard button to move trim plane on port side upward. This moves starboard bow upward when boat is planing.

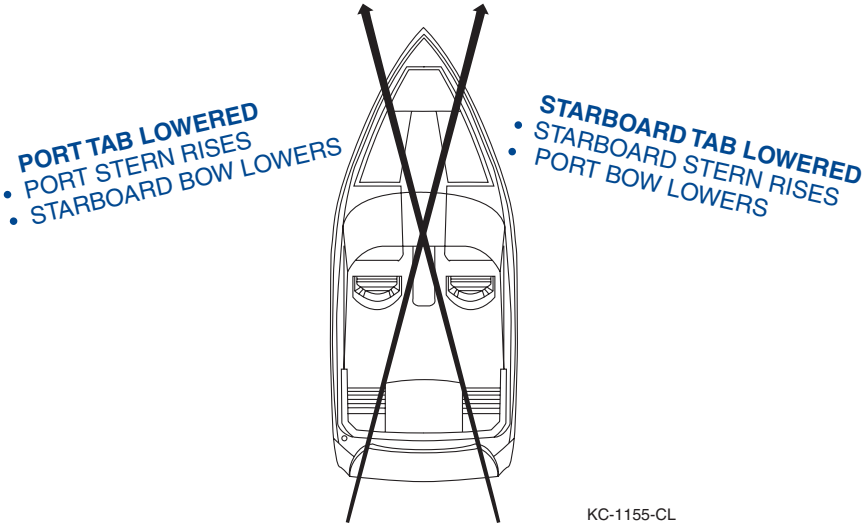

Figure 3-17

Using trim tabs in conjunction with the power trim will compensate for uneven weight distribution, listing, water conditions and other factors that cause inefficient operation. Remember that trim tabs are trimming the hull while power trim is trimming the engine drive.

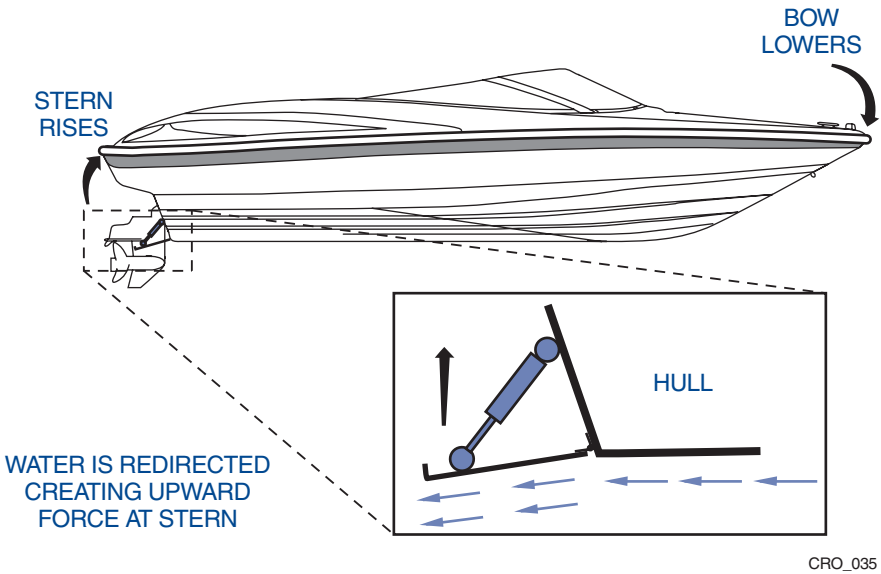

Figure 3-18

To use the trim tabs with the power trim:

1. Adjust the trim tabs to achieve a planing attitude.
2. Use the power trim to position the propeller path parallel to the water flow.
3. Readjust the trim tabs to fine tune attitude.
4. DO NOT over-trim because bow will dig in, causing the boat to veer.
5. To avoid listing, DO NOT move one tab significantly further down than the other while underway.

IMPORTANT: Refer to your Engine Operation and Maintenance Manual or the drive unit instruction manual regarding power trim controls and drive unit installed on your craft.

MOORING LINES

Use fenders to protect your craft from damage. Use good-quality, double-braided nylon line and chafing protectors to protect your craft's finish. Only use the cleats, bow eye and stern eyes to secure your craft. Do not use the handrails or windshield. The foredeck handrails should only be used for tying a "Jackline" in an emergency situation. Tie up the craft with the bow toward the waves and leave a little slack in the lines to allow for some wave movement or tidal action. Use the following procedures as guidelines only, since wind, weather, water conditions (tides) and traffic can affect mooring procedures.

When attaching mooring lines to deck cleats, make a loop in one end of the mooring line and pass it through the hole in the base of the deck cleat. Next, pass the loop back over the deck cleat. The mooring line can now safely be used to secure your craft. Mooring lines may remain attached to the cleats on your craft while underway. Always coil and place the lines where they cannot become tangled in deck gear or the propeller(s).

When you tie up, run the mooring line from your craft around the dock cleat and then back to your craft. This allows you to untie the mooring line without leaving your craft. Just heave off one end of the mooring line and bring the entire length of mooring line back into the craft.

The mooring lines you will use most often are the bow line **(4)**, the stern line **(1)** and spring lines **(2, 3)**. Each line has a specific purpose. The bow and stern lines secure your craft's bow and stern. The two spring lines keep your craft from moving forward or backward when you are moored alongside a dock.

If you are mooring your craft for a short time, bow and stern lines may be the only lines you will need. If you are mooring your craft for a longer time or the currents are swift, you should use spring lines. The stern spring line leads from the craft's stern clear forward to the piling or cleat on the dock. The bow spring line leads from the bow cleat aft to the dock.

If you are mooring in a slip, bow and spring lines, port and starboard, will keep your craft in position.

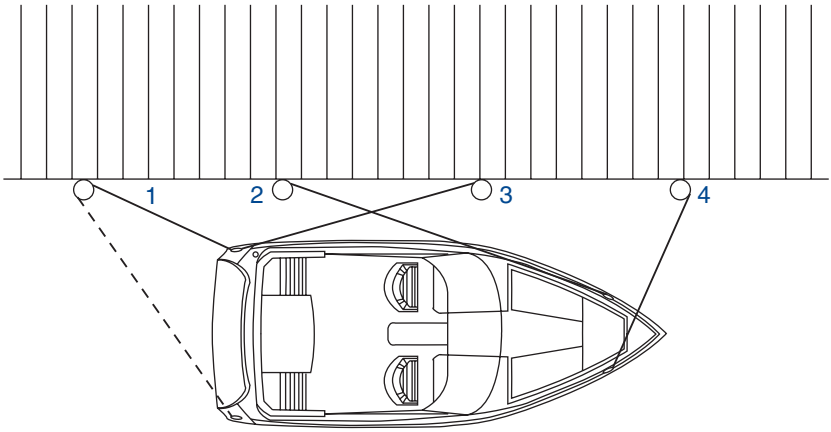

CRO_036

Figure 3-19

NOTE: Manila rope, the standard for many years, is not as strong as some ropes made of synthetic materials. For mooring, its ability to stretch is an advantage, but it tends to shrink whenever it gets wet. Nylon rope is strong and elastic. Because of its elasticity, it works well for mooring lines and anchor lines. Rope made of high tensile strength polyester fibers like Dacron™ is just about as strong as nylon rope, but it does not stretch. Kevlar rope is strong and does not stretch, but it is quite expensive. Polypropolene rope tends to deteriorate rapidly when it is exposed to sun light. Because it floats, it is well-suited for use as a tow rope for water skiing. Use for other nautical purposes is not recommended.

CANVAS

Your CROWNLINE canvas is constructed of the highest-quality materials.

To reduce CO accumulation, ventilate the craft interior by opening the windows and/or canvas to provide adequate ventilation. Deck hatches can be opened at slow speed or while dead in the water, but must be closed at or above planing speeds to prevent damage and possible personal injury.

DO NOT operate the engines or generator with the canvas installed.

Once installed, a bimini top is much higher than a convertible top. (The convertible top snaps directly to the windshield.) The bimini top provides standing room and bow-to-stern airflow. When the window piece is installed from the front of bimini to top of windshield, the canvas set is closed off in front, while maintaining full visibility.

On most CROWNLINE models, the canvas is protected by a canvas boot and is installed standard, in an upright position, ready for use. Optional trailering legs are available on some models. Contact your CROWNLINE dealer if you have any questions about your canvas.

Canvas Installation Instructions

NOTE: Canvas bow set has been pre-installed by CROWNLINE. Your CROWNLINE dealer should reinstall bow set for you, which will eliminate any additional installation requirements.

IMPORTANT: For all canvas installations, ALWAYS zip windows and curtains to main section of canvas BEFORE attempting to snap canvas in place. This will make for easier installation and prevent possible damage to the zipper and canvas. Refer to **Figures 3-20** and **3-21**.

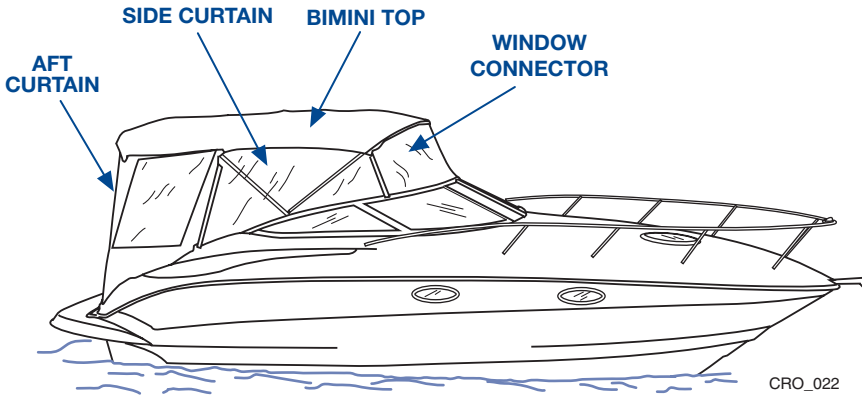

Figure 3-20
Camper Top Shown

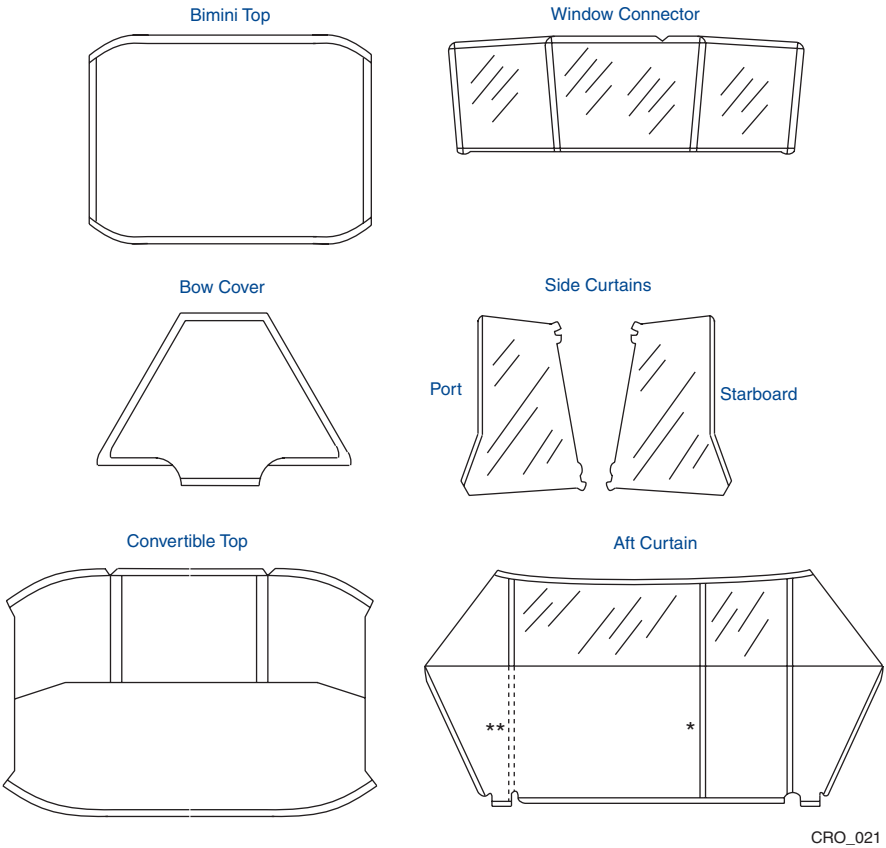

Figure 3-21

IMPORTANT: The aft curtain is similar in physical appearance except the zipper line (*) is not included, and the zipper line (**) would be extended as shown.

Convertible Top

1. Unzip boot and unfold top.
2. Attach front snaps to windshield and/or deck hooks depending on your model.
3. Attach aft straps of convertible top to deck hooks.

IMPORTANT: Canvas should be tight and may require extra force when stretching to proper snap location. For optional bow cover, snap in place. For side and aft curtains, zip, then snap in place.

Bimini Top

1. Unzip boot and unfold top.
2. Attach stanchions at the rear of the bimini top to deck mounts.
3. Attach front straps of bimini top to windshield hooks or deck hooks.

NOTE: Canvas should be tight and may require extra force when stretching to proper snap location. Avoid grasping the canvas near zippers.

4. Zip front window connector onto front of bimini top.
5. Release aft stanchions and/or straps.
6. Seal Velcro® at corners to complete installation.
7. Reconnect aft stanchions and/or straps.

For optional side and aft curtains, zip and snap in place, then seal Velcro at corners.

Your CROWNLINE is basically an open vehicle. In spite of having well-designed and well-fitting canvas enclosures, your craft is NOT waterproof in the same sense that your automobile is waterproof. In our best efforts to design these enclosures to conform to the craft, a certain amount of leakage can occur. The construction of the canvas tops and curtains involves sewing as the primary method of fastening. The needle results in holes at the seam lines which can cause leaking. Needle holes elongate with time and usage. After cleaning with soap and water, allow seams to thoroughly dry. A vinyl sealant can be applied on the seams to somewhat close the needle holes. This sealant must be applied with the canvas up and stretched tight.

Your canvas system is not warranted by CROWNLINE Boats, Inc. to provide a water-tight enclosure. The canvas top supplied with your CROWNLINE is not a storage cover and should not be used for long term storage or trailering. Canvas tops which have been used as a storage cover will not be covered by the manufacturer's warranty.

WASTE DISPOSAL

Discharge of Oil

IMPORTANT: Overboard discharge of waste should only be used in approved areas. It is your responsibility to comply with local regulations regarding the discharge of waste.

The Federal Water Pollution Control Act prohibits the discharge of oil or oily waste into or upon the navigable waters of the United States or the waters of the contiguous zone if such discharge causes a film or sheen upon or a discoloration of the surface of the water, or causes a sludge or emulsion beneath the surface of the water. Violators are subject to a penalty of $5,000.

Disposal of Plastics and Other Garbage

Plastic refuse dumped in the water can kill fish and marine wildlife, and can foul vessel propellers and cooling water intakes. Because of this, U.S. Coast Guard regulations completely prohibit the dumping of plastic refuse or other garbage mixed with plastic into the water anywhere, and restricts the dumping of other forms of garbage within specified distances from shore.

USCG Dumping Placard:

ILLEGAL TO DUMP
INSIDE 3 MILES (and in U.S. Lakes, Rivers, Bays and Sounds):

- **PLASTIC**
- **DUNNAGE, LINING AND PACKING**
- **MATERIALS THAT FLOAT**
- **ANY GARBAGE EXCEPT DISHWATER/**
- **GRAYWATER/FRESH FISH PARTS**

3 TO 12 MILES:

- **PLASTIC**
- **DUNNAGE, LINING AND PACKING**
- **MATERIALS THAT FLOAT**
- **ANY GARBAGE NOT GROUND TO LESS THAN ONE SQUARE INCH**

12 TO 25 MILES:

- **PLASTIC**
- **DUNNAGE, LINING AND PACKING**
- **MATERIALS THAT FLOAT**

OUTSIDE 25 MILES:

- **PLASTIC**

Your CROWNLINE may have more or fewer systems and components than those covered in this section based on how your CROWNLINE was built. Some systems and components may not be offered on all models. Use this section as reference. If you have any questions regarding the systems and components, contact your CROWNLINE dealer.

This section discusses the system and components of your CROWNLINE. It describes the basic operating characteristics for efficient use of the systems and components and to prevent damage. Make sure you read and understand all information provided before operating these systems.

IMPORTANT: CROWNLINE Boats, Inc. reserves the right to change, alter and modify its finished boats, parts, specifications and prices at any time without notice.

Know the systems and functions of the controls and indicators on your craft. It is very important for safe and proper operation. When replacement parts are required, use marine grade parts with equivalent characteristics, including type, strength and material. Marine grade parts are designed specifically for the conditions and environment they are exposed to. Using substandard parts could result in serious injury and/or product failure.

⚠ WARNING

Irregular inspection and maintenance of sysems can lead to death, serious injury or product damage. Inspect and maintain all systems to prevent unexpected hazards associated with worn or faulty components.

IMPORTANT: Before making any changes to the systems or components on your boat, refer to the applicable U.S. Coast Guard, American Boat and Yacht Council or ISO Standards. See your dealer for additional information.

FUEL SYSTEM

The fuel system consists of a built-in fuel tank, a fuel fill and a fuel tank vent. The internal fuel system on-board your CROWNLINE is designed to meet or exceed federal requirements, at the time of manufacture, of the U.S. Coast Guard, the American Boat and Yacht Council and ISO standards.

The fuel system has been factory-inspected and pressure-tested in accordance with regulations in effect at time of manufacture. In addition, each fuel tank must pass rigid tests and inspections performed by the fuel tank manufacturer.

Prior to taking delivery of your CROWNLINE, it is important a full inspection be made of the entire fuel system by your CROWNLINE dealer.

NOTE: To prevent engine damage not covered by the warranty, refer to your Engine Operation and Maintenance Manual for the recommended fuel type, octane rating and fuels extended with alcohol or alcohol derivatives.

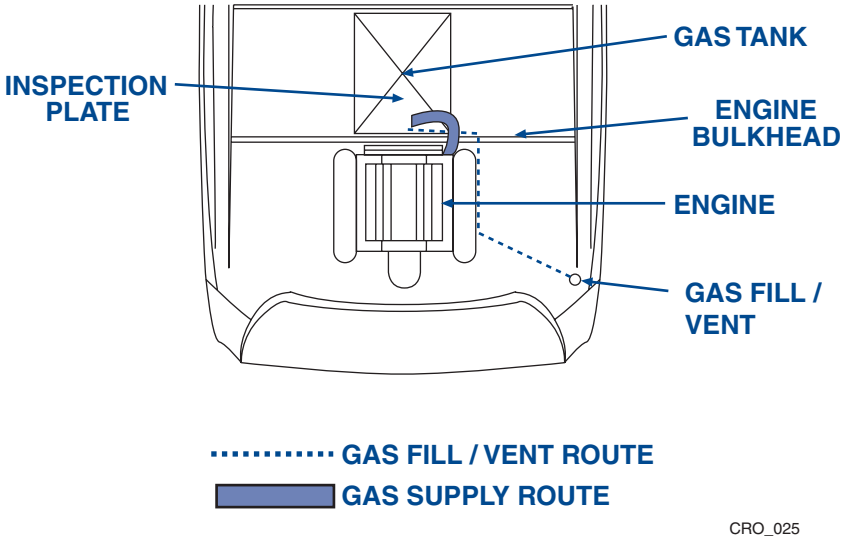

Figure 4-1

A Typical Sterndrive Gasoline System

Gasoline Containing Alcohol

Gasoline extended with alcohol, ethanol (ethyl alcohol) or methanol (methyl alcohol) is not recommended for use in your engine.

If gasoline extended with alcohol is used, or if you are not certain alcohol is present, the complete fuel system MUST BE inspected more often. If you observe any indication of deterioration or leaks, DO NOT operate the engine, and have the system repaired immediately.

Gasoline containing alcohol attracts and holds moisture and can cause the following problems:

- Hard starting, vapor lock and low speed or idle stalling.
- Corrosion to the fuel system components.
- Excessive wear and damage to internal engine parts.
- Permeation of fuel through certain fuel lines and damage to some nonmetallic materials.

Effects of alcohol are more severe with methanol and are worse as the alcohol content increases.

NOTE: DO NOT use gasoline containing an octane-enhancing additive called methylcyclopentadlenyl manganese tricarbonyl (MMT). These fuels can reduce spark plug life and can also affect engine performance.

Fuel Fill/Vent Plate

The fuel fill/vent plate on all CROWNLINE models is labeled “GAS” or “DIESEL.” Make sure to use the correct fuel type for your CROWNLINE.

The air vent allows the air in the fuel tank to be displaced by the fuel as it enters and is consumed from the tank.

Anti-Siphon Valve (Gasoline Engines Only)

The fuel withdrawal line is equipped with an anti-siphon valve where the line attaches to the fuel tank. The anti-siphon valve prevents gasoline from siphoning out of the fuel tank in the event of a fuel line rupture.

Fuel Filter

Fuel filters supplied by engine manufacturers are installed on or near the engine. The filters should be replaced frequently to maintain an adequate supply and delivery of clean fuel to the engine. Refer to your Engine Operation and Maintenance Manual.

ELECTRICAL SYSTEMS

12-Volt DC System

The 12-volt DC system is powered by a battery or batteries when there is more than one battery. Batteries are charged through the engine-driven alternator and/or (optional) battery charger. A voltage gauge, located at the helm, shows the charge level of the battery(ies). The DC circuit breakers protect the labeled circuit, which, in turn, delivers the 12-volt DC power to operate on-board 12-volt equipment. Most receptacle circuits are capable of handling 15 Amps.

The negative terminal of the battery is connected to the engine grounding stud. This is the approved negative ground setup for marine DC electrical systems. Any additional equipment must be adapted to this negative ground system. Additional equipment must be supplied with over-current protection. See your CROWNLINE dealer about additional DC power requirements.

NOTE: DO NOT make any connections for power from the voltage gauge terminals.

120-Volt AC System

⚠ WARNING

Electrocution or fire hazard from an AC system which is modified and used incorrectly. DO NOT modify or use the system incorrectly, exceed the 120-volt AC system's capacity, or overload a receptacle circuit.

To minimize shock and fire hazards:

- **Use the electrical system in the correct manner.**
- **DO NOT work on a system that is energized.**
- **Use care when connecting or disconnecting to shore power.**
- **Turn OFF the shore power switch on the craft before connecting or disconnecting the shore cord.**
- **DO NOT reset circuit breakers without determining and correcting the problem.**
- **Connect shore power at the craft first.**
- **Disconnect shore power at shore power outlet first.**
- **DO NOT swim near the craft when the shore power is connected.**
- **DO NOT alter or repair shore power cord or connections.**

An alternating current (AC) system is shore power, or generator, and supplies electricity to the electrical outlet, air conditioning, battery charger and other 110-volt AC or 220-volt AC appliances or components.

Optional Shore Power System including Battery Charger (on some models)

The AC electrical system operates from a dockside shore power (30 Amp, 120-volt, 60 cycle; European standards are different) system. The dockside system must use three-wire, color-coded circuitry.

- The BLACK or HOT wire is the ungrounded current-carrying conductor.
- The WHITE or NEUTRAL wire is the grounded current-carrying conductor.
- The bare copper or green wire, referred to as the "equipment ground," is a grounding conductor and under normal conditions is not a current-carrying wire. The bare copper or green wire is connected to the dockside ground via a galvanic isolator. If equipped, the galvanic isolator reduces galvanic corrosion caused from stray low-voltage DC currents between the craft ground and the dockside, earth ground.

The NEUTRAL wires are connected together at a buss bar. The equipment grounds are similarly connected together at another buss bar. Each hot wire is connected to, and protected by, a circuit breaker in the main distribution panel. The main distribution panel houses the system circuit breakers.

The dockside system has a MAIN circuit breaker on some models to help protect the overall distribution network.

The MAIN breaker protects both the HOT and NEUTRAL input leads. The MAIN breaker, which is very sensitive, will also trip if reverse polarity should occur. The power surge which occurs when connecting the shore power cord can also cause the MAIN breaker to trip. To avoid this power surge, turn OFF all MAIN breakers before connecting the shore power cord.

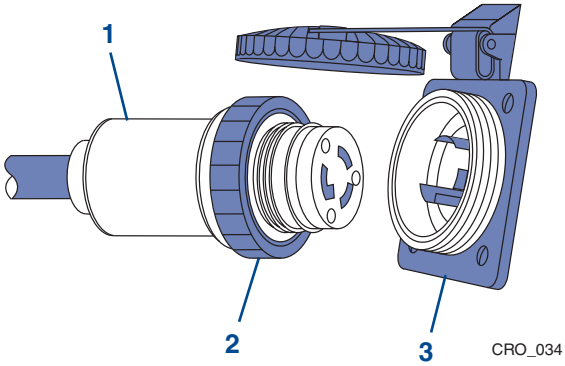

1 - Shore Power Cord
2 - Cord Locking Collar
3 - Boat Receptacle

Figure 4-2

1. Make sure the shore dockside breaker and the craft DC MAIN circuit breaker are OFF and any 120-volt AC circuit breakers that should not receive power immediately are switched OFF.
2. Connect the shore power cord to your craft receptacle and then connect the shore power cord to the dockside power source. Make sure the connection is secure at the power inlet of the craft and at the shore power receptacle. If the connection is broken and later re-secured, the MAIN breaker will trip. The connections must be secure for uninterrupted dockside service.

The circuit breakers labeled for the optional electric stove and optional electric water heater will activate these options. The electric stove also has heat controls to control the burner elements.

All AC receptacles can be used for 120-volt household appliances. Most receptacle circuits are capable of handling 15 Amps.

IMPORTANT: Due to the detailed nature of electrical schematic drawings, your CROWNLINE dealer can also provide additional information.

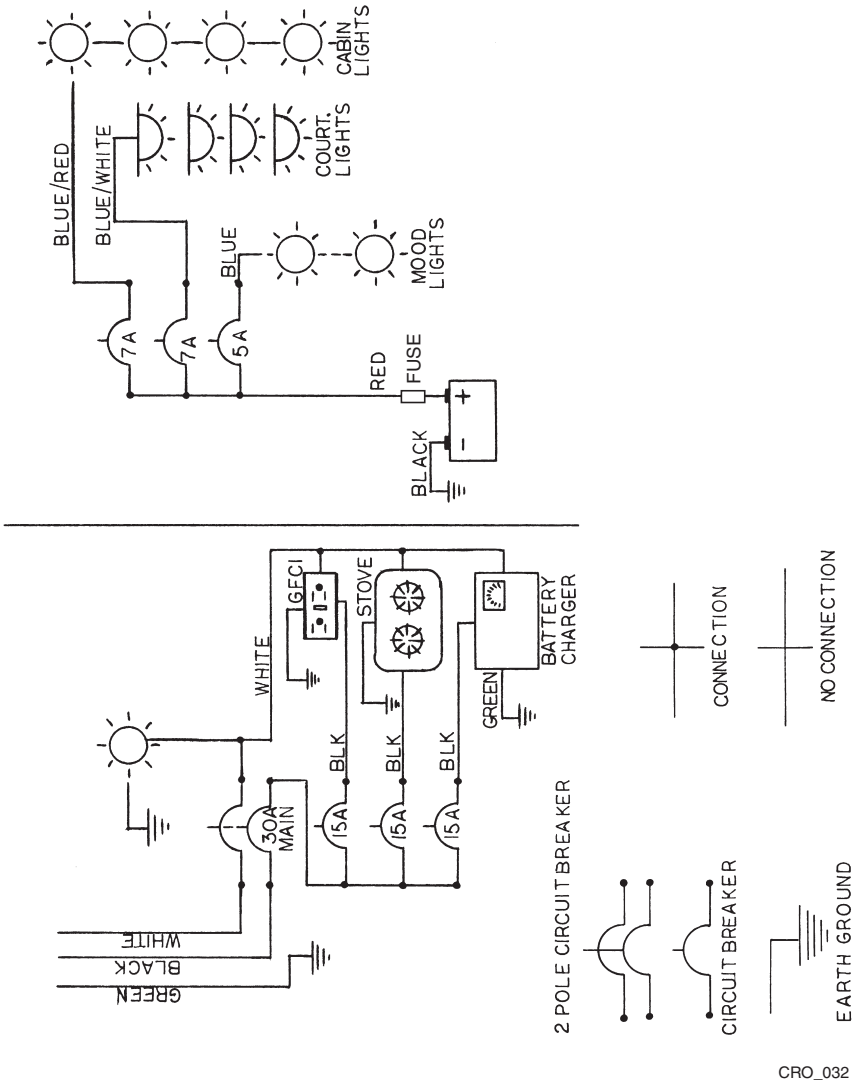

Figure 4-3

Typical DC and AC Electrical Schematic

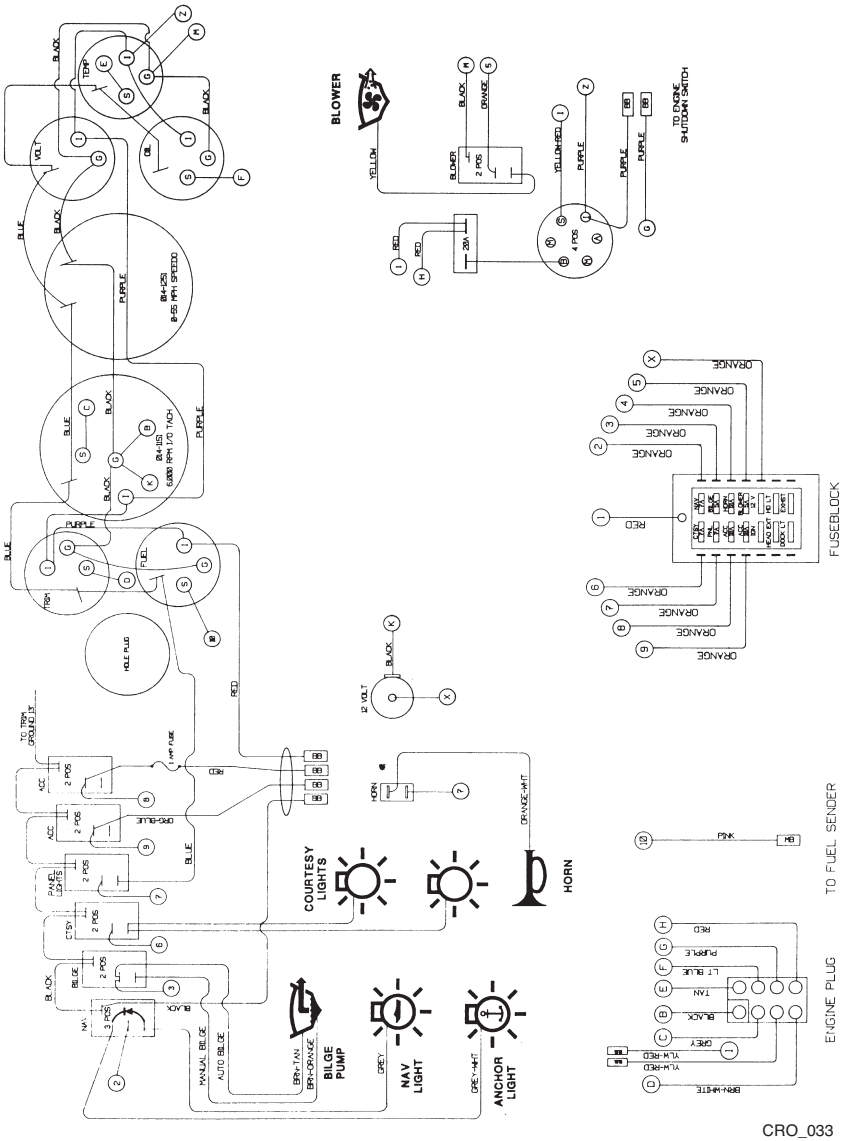

Figure 4-4

Typical DC Electrical Schematic

Following is a list which specifies the required electrical current to operate a selection of items:

Item	Electrical Load
Battery Charger	Up to 800 watts (7.3 Amps)
Coffee Maker	550 to 700 watts (6.3 Amps)
Electric Blanket	50 to 200 watts (2 Amps)
Electric Drill	See drill motor load plate
Frying Pan	1350 watts (12.3 Amps)
Lights	Wattage as marked on bulb
Space Heater	1500 watts (13.7 Amps)
Television	1500 watts (10.5 Amps)
Vacuum Cleaner	See vacuum motor load plate

These items are only examples and the actual electric current usage (amperage) may differ between manufacturers. The power requirement is usually specified on the electrical equipment. Refer to the manufacturers' specification plate. Monitor the ammeter when using electrical equipment; amperage draw must not exceed 30 Amps.

ANTICORROSION SYSTEM

Electrolysis

When connected to shore power your boat is earth grounded. There is a complete electrical circuit from the shore power, through the grounded metal parts of your craft, to the water. While this circuit is designed to provide protection against hazardous shocks, it also creates an electrolytic current which causes the decomposition of all submerged metal.

Sacrificial Zinc Anodes

1. Sacrificial zinc anodes, installed by the dealer or the engine manufacturer, protect the hardware that is exposed to the water. Electrolysis attacks the softest metals first. Because zinc is a relatively soft metal, it will decompose before harder metals. Check the anodes periodically, and have them replaced as required. See your CROWNLINE dealer for parts and service. Refer to your Engine Operation and Maintenance Manual for the recommended anticorrosion requirements.
2. A ground circuit isolator will prevent the flow of relatively low electrolytic currents, but provide a path for catastrophic short-circuit currents which are sufficient to activate circuit breakers.

IMPORTANT: It is the craft owner's responsibility to periodically inspect and replace the sacrificial zinc anodes. Damage resulting from electrolytic corrosion is not covered by the CROWNLINE Boats, Inc. warranty. If the anode has deteriorated 50% or more, replace it for continued protection. DO NOT paint an anode, its fasteners or its mounting surface. Paint and improper contact with its mounting surface will reduce the anode's protection capabilities. Make sure the contact between the anode and its mounting surface is clean and secure.

FIRE-PREVENTION SYSTEMS (OPTIONAL)

⚠ DANGER

Risk of flashback hazard or exposure to toxic fumes will cause death or serious injury. DO NOT open the engine compartment if actuation occurs. Fresh air can cause flashback and an open compartment can release fumes.

The automatic fire-extinguishing system, located in the engine compartment, is wired to a 5 Amp circuit breaker/fuse located at the helm. The circuit MUST BE ON before starting the engine. In the event of a fire, FE-241 or optional FM-200 (for European requirements) gas is released through a heat-sensitive automatic nozzle. The FE-241 or optional FM-200 gas should completely fill the engine compartment and extinguish the fire.

When actuation occurs immediately:

- **TURN OFF** engine.
- **SHUT DOWN** electrical systems.
- **EXTINGUISH** all smoking materials.
- **DO NOT** open the engine compartment.
- **DO NOT** breathe fire caused by fumes or vapors.
- **GET OFF** the craft.
- Have portable extinguishers readily available.
- Wait at least 15 minutes for hot metals or fuels to cool down.

Use caution to inspect the cause of the fire and damage to the engine compartment.

Automatic fire-prevention systems are installed only in normally unoccupied areas. Principal health hazards are:

- Inhalation of high concentrations of chemicals used in fire-prevention systems can cause death without warning.
- Vapor reduces oxygen available for breathing and is heavier than air.
- Contact with liquid can cause frostbite.
- Liquid-concentrated agent and by-product of application to fire are toxic. Avoid breathing fumes.

IMPORTANT: Refer to the fire-prevention system manufacturer's Owner's Manual for more detailed safety precautions, operation and maintenance instructions.

This system should be checked at least annually, and more frequently if recommended by the manufacturer. CROWNLINE Boats, Inc. recommends an inspection at the beginning of your boating season, and again at mid-season.

HAND PORTABLE FIRE EXTINGUISHER

The hand portable fire extinguisher is located under or near the helm and is a Type B-I (5 BC rating). The U.S. Coast Guard requires all Class 1 boats (16 to less than 26 ft [4.87 to less than 7.97 m]), that **DO NOT** have a fixed (Halon) fire-extinguishing system installed in the engine compartment to have a Type B-1 on-board at all times.

All Class 2 (26 to 39.4 ft [7.92 to 12 m]) powerboats are required to carry two approved B-I extinguishers or one approved B-II type hand portable fire extinguisher unless equipped with a fixed fire-extinguishing system in the engine compartment.

When equipped with a fixed fire-extinguishing system, only one B-I type hand portable fire extinguisher is required.

Type B-I fire extinguishers should be checked at least every three months.

CROWNLINE Boats, Inc. recommends monthly inspections.

IMPORTANT: Refer to the Type B-I fire extinguisher manufacturer's information for more detailed safety precautions, operation and maintenance instructions.

FRESHWATER SYSTEM

The freshwater system provides water for drinking and bathing. The freshwater tank is filled through the freshwater fill plate located on the deck.

Sanitize the freshwater system before initial use, after winter storage, or when the system has not been used for an extended period of time. Refer to **SANITIZING FRESHWATER SYSTEM**.

Freshwater Fill/Vent Plate

The freshwater fill plate on all CROWNLINE models is labeled "WATER." Make sure the water you use is fresh and cool. DO NOT fill the freshwater tank with anything other than fresh, cool water or any sanitizing or winter storage products.

IMPORTANT: Fill the tank with fresh, cool water. Using and refilling the tank often will help keep it clean and fresh and a source of clean, fresh drinking water.

Initial Start-Up

1. Fill the freshwater tank with approximately 3 gallons of fresh water.
2. Turn freshwater breaker ON.
3. Open galley cold water faucet to allow air to escape. Close faucet when steady flow is reached.
4. Open galley hot water faucet to fill water heater, if equipped, and allow air to escape from line. Close faucet when steady flow of water is reached.
5. Bleed air from remaining faucets.
6. Fill freshwater tank to capacity.

SANITIZING FRESHWATER SYSTEM

Sanitize the freshwater system before initial use, after winter storage, or when the system has not been used for an extended period of time.

⚠ CAUTION

Notify all persons aboard that the freshwater system is being sanitized. DO NOT allow anyone to drink from the freshwater system during the sanitizing process. The following maintenance actions should be performed monthly to keep the freshwater system clean and sanitary:

- Drain the freshwater tank completely using all faucets, showers and other freshwater sources. Refill tank with at least 2/3 of the capacity with clean water and drain again.
- Clean freshwater filter at the pump.
- Flush water system using all faucets and showers.

If the water in the tank has not been used for an extended period of time and you suspect that the freshwater system may be contaminated, sanitize the system. To sanitize:

1. Drain the freshwater tank completely using all faucets, showers and other freshwater sources.
2. Mix a solution of 1/4 cup household bleach to 1 gallon of fresh, cool water for every 10 gallons of tank capacity. Pour the solution into the freshwater tank. Top off tank with clean, fresh, cool water.
3. Turn freshwater pump ON and bleed air from all faucets, showers and other freshwater sources.
4. After approximately three to four hours, open all faucets, beginning with faucet located farthest from the pump, to empty entire freshwater system.
5. Flush the system at every freshwater source with one full tank of fresh, cool water.
6. Fill tank with clean, fresh, cool water.

If you can smell or taste bleach in the water:

1. Drain the system completely.
2. Mix a solution of 1 quart of white vinegar to 5 gallons of water. Pour the solution into the freshwater tank.
3. Allow the solution to remain in the tank until approximately one hour of cruising time is logged. Boat motion will “slosh” the vinegar/water solution to help clean the tank.
4. Allow the solution to remain in the tank for at least one week.
5. Drain the freshwater system completely.
6. Flush the system with one full tank of water.
7. Fill the tank with clean, fresh drinking water.

Water Pump and Filter

The water pump draws water from the freshwater tank. The water is then pressurized and circulated to the faucet(s) and other freshwater sources. The water pump filter prevents foreign matter from entering pump reservoir and should be periodically inspected and cleaned.

Before servicing the system, turn the water system breaker OFF and release pressure on the system by opening all faucets. To clean the filter, remove screen and rinse with clean water. Replace filter and make sure the O-ring is seated properly when installing cover.

NOTE: Refer to the water pump instruction manual for detailed safety precautions, operation, maintenance and winterizing.

Water Heater

The water heater circuit breaker (15 Amp) is located on the main AC distribution panel in the cabin area. Located on the water heater is a check valve to prevent hot water from back washing into the cold water line, and a pressure-relief valve to prevent damage to the heater from over-pressure. The water heater thermostat is preset and is not adjustable.

IMPORTANT: The heating element inside the water heater will be damaged if 120-volt power is supplied to the water heater and there is an insufficient amount of water in the tank.

NOTE: Refer to the water heater instruction manual for detailed safety precautions, operation, maintenance and winterizing.

Transom Shower

Several transom shower options are available. For operating instructions, see your dealer.

CITY WATER HOOKUP

NOTE: Monitor the water system during initial use of city water hookup. When city water hookup is connected, it is essentially connected to an unlimited supply of water. DO NOT leave the craft unattended while using city water hookup. Any major leak or break in the system will allow excess water accumulation in the bilge area which can cause sinking of the craft and swamping of batteries and engine. Damage from swamping and/or submergence are not covered by the CROWNLINE Boats, Inc. warranty.

To conserve your freshwater tank supply, the freshwater system can be connected to city water at the receptacle on the inside of the cockpit. Because of the pressure of the water entering the craft, it bypasses the tank, filter, pump and the pressure accumulator of the freshwater system.

Using city water hookup does not replenish water supply in the tank. The tank can only be filled at the freshwater fill plate. When using a dockside hookup, you must bleed all lines just as you would for the freshwater tank system. Refer to Initial Start-Up.

COMPONENTS

Dual Battery Switch

The dual battery switch enables DC power to be used from one or both batteries.

Power to the engine and all 12-volt electrical equipment, except the automatic bilge pump high water alarm or CO detector, if equipped, is controlled by the dual battery switch. The dual battery switch settings available are OFF, 1, 2 and ALL.

The dual battery switch is located under the cockpit wet bar or stern bench on selected models.

IMPORTANT: The dual battery switch should be in the OFF setting when not in use and especially while the boat is unattended. In the OFF setting, only the **automatic bilge pump and the CO detector (selected models)** are supplied with DC power. All helm dash instrumentation is OFF.

The following describes the function and purpose for each setting:

OFF – All 12-volt power to craft is OFF, except for the automatic bilge pump. Make sure to turn the dual battery switch to OFF when craft is unattended for extended periods.

1 – Will use battery “1” to power engine and all 12-volt equipment connected to that battery. Also, battery “1” will be charged by the alternator. Battery “2” is isolated and remains in reserve.

2 – Will use battery “2” to power engine and all 12-volt equipment connected to that battery. Also, battery “2” will be charged by the alternator. Battery “1” is isolated and remains in reserve, but the automatic bilge pump will remain activated.

ALL – Batteries are now connected in parallel. Both will power engine and all 12-volt equipment, and will be charged by the alternator.

NOTE: DO NOT turn dual battery switch to OFF setting while engine is running; alternator and wiring damage will occur.

CROWNLINE Boats, Inc. recommends the use of only one battery at a time. This is accomplished by using the number 1 or 2 setting. Avoid using the ALL setting, especially when using accessories. This will draw power from both batteries and can leave you with two dead batteries instead of one. Use the ALL setting only when a single battery is not capable of starting the engine or to charge both batteries only.

IMPORTANT: Rotating battery usage increases the life of the battery.

Battery(ies)

Batteries are not furnished by CROWNLINE Boats, Inc.

Marine batteries are completely sealed using an absorbent electrolyte principle to provide high reserve capacity, plus cold cranking performance.

If more than one battery is installed, all batteries are electrically isolated from each other. When the engine is running, each battery is charged automatically and independent of the other in the ALL position on the battery switch. This provides complete freedom of battery selection for power use.

⚠ WARNING

Explosion, fire or burn hazard from vented fumes or burns from battery electrolyte can cause death or serious injury.

- **Wear eye protection and rubber gloves when working on or around batteries.**
- **DO NOT charge or use a battery booster to start your engine.**
- **Charge the battery outside of the boat.**
- **DO NOT smoke or bring a flame near a battery at any time.**
- **DO NOT have your head directly above a battery when making or breaking electrical connections.**
- **DO NOT use a metal object to spark between battery posts to check if the battery is charged.**
- **DO NOT disconnect or reconnect battery cables if gasoline fumes are present.**

If battery electrolyte spillage occurs, immediately wash area with a solution of baking soda and water.

AC/DC Converter and Battery Charger

The AC/DC converting and charging system is fully automatic and permanently wired into the 12-volt DC system. It operates with standard AC power sources from 105-125 volts (European standards are different).

DC Lighting

See your CROWNLINE dealer for information regarding bulb replacement.

Ground-Fault Circuit Interrupt

The ground-fault circuit interrupt (GFCI) provides additional electric shock protection. All accessible 120-volt outlet circuits are protected by the GFCI. The GFCI outlet comes with a built-in test and reset switch.

When a circuit breaker is tripped by the GFCI, push the RESET button. The GFCI outlet should be checked periodically by pushing the TEST button. Pushing the TEST button will cut power to the 120-volt outlets. If the GFCI should trip, this will shut off power to all other electrical outlets on the same circuit. Be sure to check the GFCI RESET button if electrical appliances do not function.

Bilge Pump

The automatic bilge pump with manual override removes excess water accumulation from the bilge area. If the pump motor runs but no water is discharged, it may be clogged. If there is no visible debris clogging the pump and water is still not being removed, inspect the discharge hose for kinks or obstruction. If the automatic bilge pump does not run, check the in-line fuse/breaker located near the battery(ies).

IMPORTANT: The Federal Water Pollution Act prohibits the discharge of oil or oily waste into or upon the navigable waters and contiguous zone of the United States if such discharge causes a film or sheen upon, or discoloration of, the surface of the water, or causes a sludge or emulsion beneath the surface of the water. Violators are subject to a penalty of $5,000.

Engine Water Ingestion

NOTE: To avoid possible ingestion of water that can damage engine components:

- DO NOT turn the ignition key off when the engine is running above idle speed.
- DO NOT use the lanyard stop switch to shut off the engine, except during an emergency.
- DO NOT come off plane quickly.
- DO NOT shift into reverse and shut off engine.
- When coming off plane, a large following wave may roll over the boat's transom, apply a short, light burst of throttle to minimize the wave action against the stern of the boat.

Engine water ingestion can also occur if your boat is heavily loaded at the stern. Distribute the weight of gear and passengers forward and aft to maintain a level trim. Engine water ingestion is not limited to these situations. Be sure to read and understand all the information provided in your Engine Operation and Maintenance Manual on engine water ingestion. Water ingestion is not covered by the CROWNLINE Boats, Inc. warranty.

Bilge Blower

⚠ DANGER

Fire or explosion hazard from fumes accumulating in bilge area. Ventilate the engine compartment by running the blower for five minutes, especially after repairing or refueling, and check for fuel spills or leaks.

The bilge blower forces potentially explosive fumes out of the engine compartment/ bilge area and circulates fresh air in through the deck vents. The bilge blower must be running at least five minutes before and during engine start-up, and while boat is operating below cruising speed.

The bilge blower energized system indicators (on some models) on the helm only indicate that the system is energized. Always check the blowers for correct operation.

Never assume all explosive fumes have been removed from the engine compartment. If you detect any fuel fume odors, DO NOT attempt to start, or SHUT DOWN the engine and electrical circuits. Immediately determine the source of the odor.

MARINE SANITATION DEVICE (MSD)

With any MSD, all Federal Water Pollution laws apply. Know these laws.

Cruiser Models

The ceramic Marine Sanitation Device (MSD), or head, installed on your CROWNLINE is similar to your home toilet. Flushing of the head is achieved with raw water through a manual pump, and the tandem system provides wet or dry flushing while the waste water is flushed into the holding tank.

IMPORTANT: Before operating the MSD, refer to the MSD instruction manual for detailed safety precautions, operation and maintenance. Water flooding or damage caused by misuse of the MSD is not covered by the CROWNLINE Boats, Inc. warranty.

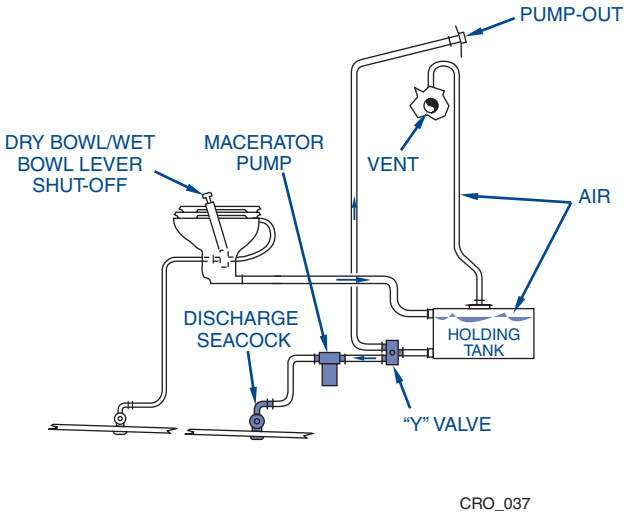

Figure 4-5

Typical Waste System

If your boat is equipped with a VacuFlush MSD system, the toilet is flushed by using the DC electric switch, located in the head compartment. This system uses fresh water instead of raw water to flush the waste and minimize odor problems.

Refer to the VacuFlush MSD system manufacturer's Owner's Manual for more detailed safety precautions, operation and maintenance instructions.

Selected Models

The standard head on select models is a portable toilet. This portable toilet provides simple operation and convenient disposal of waste. A dockside pump-out system for the portable toilet's built-in holding tank is an option. Proper use and operation of this portable toilet eliminates unnecessary measures and maintenance. Before using your portable toilet, refer to the portable toilet system manufacturer's Owner's Manual for more detailed safety precautions, operation and maintenance instructions.

HOLDING TANK

Waste from the toilet is flushed to the holding tank. You can empty the holding tank using a dockside pump-out or, when permitted, by using the macerator to discharge the waste directly overboard. Waste in the holding tank can produce methane, an explosive gas. Keep vent open and clear of obstructions.

⚠ WARNING

Explosion or fire hazard from the accumulation of explosive gases can cause death or serious injury. Keep vent open and clear of obstructions and keep open flame away when maintaining sanitary system.

Check the level of the waste tank regularly. When the tank is full, do not use the head. If the tank is overfilled, waste can plug the vent or cause the tank to rupture, allowing the waste to empty into the bilge area. Make sure to check the tank regularly.

To empty the holding tank, connect the hose from the pump-out facility to the fitting marked WASTE. After the waste is pumped out, flush the head several times to clear waste buildup of the lines and rinse out the tank.

Flushing fresh water through the head is also a good idea if you will be leaving the craft unattended for a few days. Flushing will clear waste from the lines into the holding tank. Any waste in the lines tends to dry out and the hardened waste can affect the future operation because it can decrease the inside diameter of the lines.

OVERBOARD DISCHARGE

IMPORTANT: Overboard discharge of untreated sewage within three miles of land is prohibited by law. Check with local authorities for proper discharge procedures in your area. If your boat is going to be used on inland waters, have your dealer seal the overboard discharge portion of your waste system.

If regulations permit, the macerator can be used to pump waste from the holding tank overboard. The MACERATOR circuit breaker switch at the DC control panel controls the power supply to the macerator. The macerator pulls the waste from the holding tank, grinds the waste into small particles, and pumps the waste overboard through a hull discharge fitting.

Follow these procedures to operate the macerator:

1. Turn Y-valve at the waste tank to the discharge position.
2. Switch the MACERATOR breaker switch at the DC main electrical control panel to ON.
3. Allow the macerator to run until the holding tank is empty, but no longer. **Running the macerator when the tank is empty will cause damage to the pump.**
4. When you hear the pump speed up (indicates tank is empty), immediately switch the MACERATOR breaker to OFF.

RUNNING/NAVIGATION LIGHTS

Night boating requires running lights. Your CROWNLINE boat has one white (mast or all-around), one red (port) and one green (starboard) light. Check for proper operation before heading out. You should also learn to identify the running light combinations for other vessels. CROWNLINE Boats, Inc. recommends your participation in a safe boating course.

The running/navigation lights are controlled at the helm by a three-position rocker switch. This allows the mast (white) or all-around light to be ON when anchored or moored, the mast and running/navigation lights, port (red) and starboard (green) lights to be ON while underway, or all lights OFF in the mid-position.

STEREO AND ENTERTAINMENT

The stereo is a highly sensitive AM/FM stereo receiver. The stereo and speakers are water-resistant but not waterproof. To avoid potential damage, prevent water from spraying directly on stereo components. Keep the stereo cover closed when not in use or when weather conditions can affect the system.

The entertainment system can consist of a six-disc changer, CD player; TV or TV w/DVD.

IMPORTANT: Refer to the entertainment or stereo manufacturer's literature for more safety precautions, a list of features and detailed operation.

REFRIGERATOR/FREEZER

The refrigerator/freezer operates on either 120-volt AC or 12-volt DC power. A built-in relay automatically switches to the correct power source. When using 12-volt DC power, keep the temperature control setting at the desired position. For long periods without shore power, run the engine occasionally to ensure your battery maintains an adequate charge.

IMPORTANT: Refer to the refrigerator/freezer manufacturer's literature for more safety precautions, a list of features and detailed operation.

STOVE (CABIN MODELS ONLY)

Your craft is or can be equipped with either an alcohol, alcohol/electric or electric stove. The alcohol/electric stove uses either alcohol or 120-volt, 30 Amp electrical power source.

IMPORTANT: Refer to the stove manufacturer's literature for more safety precautions, a list of features and detailed operation.

⚠ DANGER

Carbon Monoxide Hazard. Fuel-burning appliances produce more carbon monoxide than a warm engine. Reduce the possibility of carbon monoxide accumulation and excessive exposure, providing adequate ventilation in the cabin, cockpit and enclosed passenger areas. Open any hatches, doors, windows and side vents, when necessary, to increase ventilation.

AIR CONDITIONING SYSTEM

Your craft may have an optional air conditioning system. **Figure 4-9** shows the components of a typical air conditioning system. The air conditioning pump draws in seawater through a seacock in the bilge area. When the air conditioner is running it discharges the seawater through a thru-hull fitting above the waterline. Air conditioning units are controlled through a breaker switch at the AC control panel. When using an air conditioner, its breaker switch must be on.

When you operate the air conditioner:

1. Open the air conditioner seacock. The valve is open when the handle is in line with the seacock valve.
2. Check the sea strainer next to the seacock. Make sure it is clean and free of debris to ensure a steady flow of water to the unit.
3. Set the thermostat to the temperature desired.

IMPORTANT: Make sure the seacock is closed when air conditioner is not in use. Refer to the air conditioner manufacturer's literature for more safety precautions, a list of features and detailed operation.

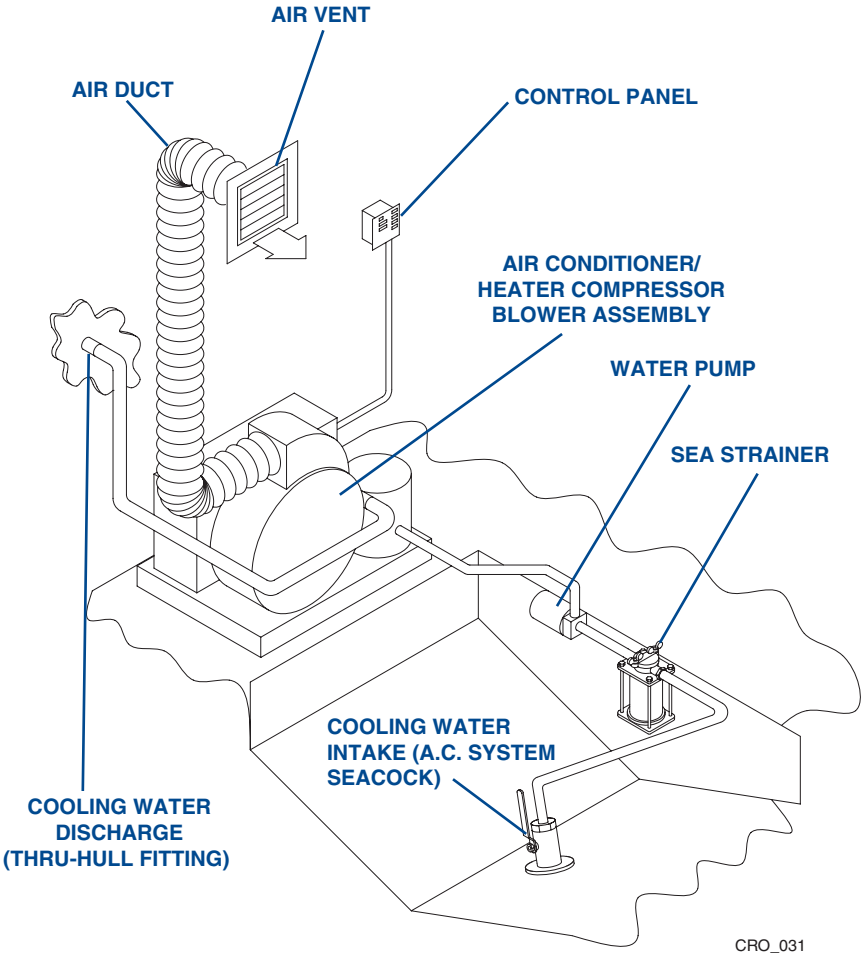

Figure 4-6

Typical Air Conditioning System

General Care and Maintenance

Your CROWNLINE may not include all the features described in this section, based on how your CROWNLINE was built. If you have a question about the features on your craft, contact your CROWNLINE dealer. This section provides a troubleshooting chart as well as information to help you care for and maintain your CROWNLINE. Periodic inspection and the maintenance procedures listed in this section are necessary. Winterization and some engine maintenance are best performed by your CROWNLINE dealer. Some maintenance procedures that can be done by you or your CROWNLINE dealer follow in this section. You should become familiar with these procedures even if you have your CROWNLINE dealer service your craft. If you do not fully understand the information contained within this section, or in any of the related product information materials, contact your CROWNLINE dealer. Your CROWNLINE dealer is qualified to make repairs or modifications that will not compromise safety, design integrity or warranty coverage.

Some manufacturers may have more detailed information regarding the care and maintenance of their products. Use this section as a foundation, while following any of the manufacturers' recommended procedures.

NOTE: DO NOT attempt any repairs on your craft unless you are qualified to do so. Only use approved marine replacement parts available from your CROWNLINE dealer. Before attempting to use a particular cleaning solution or method, test the material you will clean in a hidden or inconspicuous area for possible adverse reactions. Use cleaning agents sparingly. Never discharge cleaning solutions into the waterways. Do not use products that are non-biodegradable, contain phosphates, chlorine or solvents, petroleum-based products, or citrus cleaning agents on stainless steel.

SPECIAL CLEANING PROBLEMS

Strong cleaners should be applied with a damp, soft cloth or sponge. DO NOT rub aggressively. Follow with another clean cloth, then rinse with clean water and dry. If a stain persists, contact your CROWNLINE dealer or CROWNLINE customer service.

Use the chart below and follow steps in listed order to clean common stains. After following these steps, rinse well with water and dry. Repeat steps if necessary.

Common stains and steps to treat:

A - Medium-soft brush, warm, soapy water/rinse/dry
B - Fantastik™ or a high-quality, gentle household cleaner
C - One (1) tablespoon ammonia, 1/4 cup hydrogen peroxide, 3/4 cup warm water/ rinse/dry
D - Scrape off excess (chill chewing gum with ice)
E - Denatured alcohol/rinse/dry

Stain	Step(s)
Baby oil	B
Ballpoint ink *	E, B
Bird droppings	B, E, C
Blood	B, C
Chewing gum	D, A, D, then A
Coffee, tea, chocolate	B, B
Crayon	D, B
Engine oil	B, E, then B
Eye shadow	E, B, E, then B
Grape juice	B, C
Grease	D, B
Ketchup	A, B
Latex paint	A, B
Lipstick	B, E, C
Mildew or wet leaves	D, B, A
Oil-based paint (dried)	A, B
Oil-based paint (fresh)	D, B
Oily spot	B, E
Permanent marker *	E B
Petroleum products	B, E
Shoe polish *	A, B
Spray paint	C, B, B
Suntan lotion *	D, B
Tar/Asphalt	A, B
Urine	B, C
Yellow mustard	B, E, C

*Suntan lotions, shoe polish, foods and drinks may contain dyes or coloring agents which can stain permanently. Wet leaves can also stain permanently.

INTERIOR CARE

Vinyl and Upholstery

Always try to clean up spills quickly to prevent staining.

The seat coverings and trim are made of temperature-resistant, expandable vinyl. Remove lightly soiled areas with a mild soap and warm water solution. Dry with a clean, soft, lint-free cloth or towel. For difficult stains, refer to **SPECIAL CLEANING PROBLEMS**.

Use a stronger detergent (always follow label instructions) for difficult stains.

Never use steel wool or abrasive, powdered cleaners. They will mar the surface.

Removable outside seat cushions should be placed inside when not in use. Refer to the Vinyl Care Guide supplied with your boat for additional information.

Cabin Cushions, Interior Curtains and Fabrics

Treat the upholstery the same as you would treat home upholstery. Dust and dirt become harsh abrasives in cushions, so vacuum often. To keep fabrics clean and odor-free, vacuum often and shampoo. Allow the cushions, interior curtains and fabrics to air dry. On occasion, spray with Lysol™ or other disinfectant to prevent mildew.

Wood Products

Clean with a damp, soft cotton cloth. For thorough cleaning, wash surface with a mild solution of soap and water, and dry with a soft cotton cloth. A quality liquid furniture wax can be used when necessary. Apply liquid wax product gently and work from the center out. Rub in a circular motion and stop near the edge of the wood that meets with the interior or carpet. Remove wax with a clean soft cloth.

Carpet

Dust and dirt become harsh abrasives in carpeting, so vacuum often.

Interior – Vacuuming and occasional carpet shampooing are recommended for extended life and appearance. Apply a light coating of Scotchgard™ to protect against accidental spills.

Exterior – Scrub indoor/outdoor carpeting with a brush using mild detergent and warm water. Thoroughly rinse with clean water. Allow carpet to dry completely before use. Apply a light coating of Scotchgard™ to protect against accidental spills.

EXTERIOR CARE

Cleaning Deck and Hull

The deck and hull are made of fiberglass covered with gelcoat. Gelcoat is a scratch-resistant, color-pigmented, polyester resin. During normal use, some damage to the gelcoat should be expected. Proper care and maintenance of the gelcoat will keep the craft's luster and underlying fiberglass in good condition. 3M™ carries a complete line of fiberglass care products.

IMPORTANT: Foot traffic on soiled fiberglass surfaces will severely scratch and mar the finish. Keep the fiberglass as clean as possible.

NOTE: Make sure the household detergent you use does not contain ammonia or chlorine. Ammonia, or abrasive-type cleaners, will dull and discolor the surface of the gelcoat and are not recommended for routine maintenance. The gelcoat should be regularly cleaned with mild household detergent and water. Waxing the gelcoat surface regularly will preserve its luster. CROWNLINE Boats, Inc. recommends a fiberglass wax that is capable of filling gelcoat pores. Fiberglass wax also contains various chemicals that screen out harmful ultraviolet rays that can cause the gelcoat color to fade.

⚠ WARNING

Falling and Slipping Hazard. Wet or dry waxed gelcoat is very slippery and could cause unsafe footing. DO NOT wax nonskid deck surfaces.

Minor Stains

Wash with a soft, clean cloth and multipurpose boat soap or mild household detergent to remove surface stains. Rinse thoroughly with clear water. Some household laundry detergents may contain abrasives.

If deep stains do occur, use a special fiberglass cleaner and stain remover.

GELCOAT MAINTENANCE

Minor Scratches – Minor scratches can be repaired with car wax. Treatment will repair or lessen scratches.

Apply wax to a damp, soft cloth. Rub the gelcoat surface gently with the cloth in a circular motion.

IMPORTANT: Apply wax following the manufacturer's label instructions.

Chips, Hairline Cracks and Small Patches

Cracking, crazing, discoloration, blistering, chalking or fading of exterior gelcoat surfaces are not covered under the warranty. See your CROWNLINE dealer for more information.

Gelcoat that matches the color of your CROWNLINE can be purchased at your CROWNLINE dealer. To match the color exactly, specify boat model, name, color and year manufactured.

IMPORTANT: Air temperature must be above 65°F (18°C) to apply gelcoat. Area must be clean, dry and free from oil or wax before attempting to repair.

1. Sand damaged area with #50 sandpaper, or use a power drill with a burr bit. Round out and feather edges.
2. Remove all flaky edges. If surface damage covers a large area, a power sander may have to be used.
3. Cleanse the area with rubbing alcohol or acetone after you have completed sanding.

⚠ WARNING

Fire and Ingestion Hazard. Acetone is highly flammable and toxic. Avoid sparks and open flame. Use in well-ventilated areas only. Wear the proper personal protection and follow the manufacturer's label instructions. Do not store rags soiled with acetone in the boat. Dispose of rags properly ashore.

4. Place one teaspoon of gelcoat on a piece of wood or cardboard.
5. Add two or three drops of hardener. Mix for 10 to 15 seconds using a spatula or knife.
6. Apply gelcoat to damaged area. Fill in slightly higher than surrounding surface.
7. Cover with wax paper or clear plastic and smooth to the desired contour.
8. Allow an hour or two to dry completely.
9. Remove wax paper or plastic.
10. Water sand with #600 wet or dry sandpaper.
11. Buff repaired area with buffing compound, then follow with wax and polish.

IMPORTANT: If using a power buffer, keep the buffer moving. DO NOT pause in one area too long. This can cut into the boat's underlying surface.

Hull

If you are going to leave your CROWNLINE in the water continuously for two or more weeks, CROWNLINE Boats, Inc. recommends sealing the hull bottom with a high-quality barrier coating. Unsealed gelcoat may form water blisters. Repair of water blister damage is not covered under the CROWNLINE Boats, Inc. warranty. If you have any questions regarding this, contact your CROWNLINE dealer.

NOTE: Wire brushes, scouring pads or other abrasive-type materials/solutions should not be used on the hull bottom of your boat. They create small scratch marks that will collect dirt, silt, sand, marine growth and other foreign materials.

Keep the hull bottom of your boat clean and make frequent inspections for any signs of excessive wear or damage. Repairs to the hull bottom should be made immediately. Accumulation of dirt and marine growth may cause drag, which limits the performance and fuel efficiency of your boat.

Bottom Paint (Anti-fouling)

Anti-fouling bottom paint is designed to dissolve slowly to prevent marine growth. Therefore, the hull bottom should be repainted at the end of the boating season. Factors to take into consideration when selecting a protective bottom paint:

- Water temperature
- Pollution
- Salinity
- Current
- Organic material in the water.

IMPORTANT: Contact your CROWNLINE dealer for recommended bottom paints and for information regarding local laws that govern your area for the use of these paints. Many states regulate the chemical content of bottom paints to meet environmental standards and regulations.

1. Scrub the hull bottom with a bristle brush and a solution of soap and water.

NOTE: Repainting the hull bottom is not required after each scrubbing, unless bare areas are visible in the bottom paint.

2. Sand entire bottom surface of boat.
3. Smooth out all rough areas as required.
4. Clean bottom surface to remove all dust and foreign materials.
5. Make sure bottom surface is completely dry.
6. Apply new coat of bottom paint.

IMPORTANT: Follow the paint manufacturer's recommendations regarding drying times for bottom paint.

STAINLESS STEEL AND CHROME

⚠ DANGER

Fire, explosion or exposure to toxic materials hazard. Some of these solvents are highly flammable and toxic. Use care when cleaning. Wear protective gear and provide adequate ventilation. Do not store soiled rags on-board. Store or dispose of rags properly ashore.

NOTE: Be careful when cleaning around wood or other decorative trim. Some of these solvents could seriously damage these materials.

Inspect all hardware, mounting hardware and fittings to make sure everything is securely fastened. The hardware is either stainless steel or chrome-plated brass.

Stainless steel is highly resistant but can still rust, especially in a marine environment. Your hardware can become permanently damaged without proper care. Keep your stainless steel and chrome looking new by cleaning monthly with a high-quality stainless steel cleaner or polish.

Preventive Steps

Clean and wax the hardware prior to exposing the craft to harsh environments or placing it in extended storage. In some harsh environments, it may be necessary to clean and wax more often. Repeat as needed. High-quality stainless steel cleaners and conditioners are commercially available. Always rinse with clean water and dry with a towel or chamois after an outing.

Cleaning

Clean with fresh water and a mild, non-abrasive detergent. Use of other cleaners or abrasives will remove a protective film from your stainless steel hardware. As a final step, apply a coat of wax or chrome polish. Clean and polish in the direction of the grain and finish.

If any rust or corrosion is visible, remove it as soon as possible with a high-quality metal cleaner or polish. Do not use steel wool or any coarse abrasives, bleach or acids. DO NOT use cleaners that are not intended for use on stainless steel, such as glass, tile, or counter or citrus cleaners. These cleaners can damage the hardware permanently. Apply a high-quality metal polish or automotive wax after cleaning. Always test any product you are not familiar with in an inconspicuous area before applying to the complete surface.

WINDSHIELD AND PORTALS

Your windshield, portals, mirrors and gauge faces deserve the same care as the other parts of your craft. Clean them often with quality, commercially available glass cleaners.

⚠ CAUTION

Never use acetone, benzene, carbon tetrachloride, lacquer thinner or similar-type solvents. They can penetrate the glass/Plexiglas surfaces and cause hazing that will obstruct visibility.

Glass Cleaning

The helm windshield is constructed of 100% tinted safety glass.

1. Clean all glass with glass cleaner or water and rinse with clear water. Always use a clean, soft cotton cloth.
2. Remove grease and oil with kerosene or Hexane.

Plexiglas Cleaning

1. Wash all Plexiglas, clear vinyl or other synthetic materials with a mild detergent and water solution and rinse with clear water. Always use a clean, soft cotton cloth. DO NOT use harsh or abrasive cleaners on clear vinyl. These cleaners will scratch the surface. Keep the vinyl soft and flexible by applying a UV protectant.
2. Remove grease and oil with kerosene or Hexane.

DO NOT fold or wrinkle clear vinyl. Roll it smoothly when storing and store it dry in a dry, well-ventilated area.

CORROSION PROTECTION

It is essential that engines, stern drives and other metal components that come in contact with the water be properly protected against “stray-current” and “galvanic” corrosion.

Several possible sources of corrosion can be attributed to improper dockside wiring, improperly protected neighboring boat, submerged wiring in bilge, faulty grounding and an insufficient number of anodes or deteriorated anodes.

Severe damage to the stern drive unit and related components can occur if these components are either under-protected or overprotected against the effects of these various electrical currents.

We recommend you have your CROWNLINE dealer perform “hull potential” testing to ensure that the proper level of corrosion protection is being used for your local water conditions or waters you plan to boat.

These tests should be performed at the location where you use and dock your boat.

IMPORTANT: Damage resulting from galvanic or stray-current corrosion is not covered by the CROWNLINE Boats, Inc. warranty.

ENGINE COMPARTMENT

Corrosion protection should also be considered in other locations on your craft. Use a high-quality corrosion protection spray and treat components which can be exposed to corrosion. Use the chart as reference for intervals. Always follow the manufacturer's recommendations for usage.

Component(s)	Interval - months
Bilge area, general	3
Bilge pump housing and connections	3
Electrical connections	12
Engine	6
Fuel line connections at the fuel tank	6
Fuse panels	12
Hinges	12
Hydraulic cylinder shafts for steering	1
Light sockets	3
Locks	12
Operating mechanisms, levers	1
Plumbing connections in head areas	6
Sliding tracks of doors	12
Thru-hull fittings and seacocks	3
Windows, window hinges	12

GALVANIC CORROSION

Galvanic corrosion (electrolysis) can cause serious damage to any metal component in the water. Galvanic corrosion is the deterioration of metals from the effects of electrolytic action. When different metals are immersed in a conductive fluid like salt water, an electric current is produced, similar to the action of a battery. The softer metal will be the first to deteriorate or corrode.

Galvanic corrosion can occur in fresh or salt water, but, salt, brackish and polluted waters can accelerate the galvanic corrosion process.

Self-sacrificing anodes can be mounted to your craft to help prevent or reduce damage to metal components from galvanic corrosion.

IMPORTANT: It is the craft owner's responsibility to periodically inspect and replace the sacrificial zinc anodes. Damage resulting from electrolytic corrosion is not covered by your CROWNLINE Boats, Inc. warranty. If the anode has deteriorated 50% or more, replace it for continued protection. DO NOT paint an anode, its fasteners or its mounting surface. Paint and improper contact with its mounting surface will reduce the anode's protection capabilities. Make sure the contact between the anode and its mounting surface is clean and secure.

SALT WATER

Wash your craft after each use in salt water. If you continue to operate in salt water, the entire boat should be protected against saltwater damage. Refer to your Engine Operation and Maintenance Manual for saltwater operating recommendations.

CANVAS

Convertible and bimini tops are designed to provide coverage for the helm seating areas from the sun and light rain. These tops should not be used as a weather cover and will be damaged by accumulation of rainwater or snow buildup. While these tops are intended to provide weather protection, they are not completely weathertight or designed for extended periods of storage. The canvas may have openings to accommodate supports. To prevent exterior helm seat cushions from getting wet, it is recommended that all removable exterior cushions be removed and properly stored when helm cover is installed.

NOTE: The canvas top supplied with your CROWNLINE is not a storage cover. Canvas tops which have been used as a storage cover will not be covered by the manufacturer's warranty.

- DO NOT store the canvas while damp, or in a wet, unventilated or moist area.
- DO NOT fold the canvas. ROLL IT.

- DO NOT use the canvas top for storage. It is designed and intended for short-term use only.
- DO NOT tow the craft with the canvas top in place.

Cleaning

IMPORTANT: DO NOT use hot water when cleaning the canvas. Dry in an automatic dryer, dry-clean or steam press.

Clean the canvas regularly to prevent dirt and other elements that may accumulate on and become embedded in the fabric.

1. Wet the canvas and use a natural detergent and lukewarm water solution with a soft bristle brush to scrub. DO NOT USE NONNATURAL DETERGENTS.
2. Use a mild solution of ammonia/water and scrub for heavy soil or mildew buildup. Be sure to rinse thoroughly.
3. Brush or sweep underside of the top. Spray lightly with Lysol™ or other disinfectant to prevent mildew. DO NOT saturate the canvas with these products.

Care

1. Keep the top up in rain or when boat is not in use.
2. Lubricate the zippers with paraffin and the snaps with petroleum jelly.
3. If a leak occurs along a canvas seam, rub with paraffin or apply a light coating of Scotchgard™.
4. Allow the canvas to air-dry before storing. To prevent mildew, DO NOT store the canvas while damp, or in a wet, unventilated or moist area.
5. Avoid mooring under trees.
6. DO NOT tow the craft with the canvas top in place.

GENERAL MAINTENANCE

CROWNLINE Boats, Inc. recommends maintenance and repairs be performed at an authorized CROWNLINE dealer. The following information is only general information and does not cover the complete methods of maintenance.

IMPORTANT: Refer to your Engine Operation and Maintenance Manual and all other manufacturers' literature for detailed information about your CROWNLINE. Read Engine Operation and Maintenance Manual carefully.

Check for fuel line leaks every time you use the craft. DO NOT start your engine if gasoline odor is present. Gasoline fumes are highly explosive. Before starting your engine, open the engine cover, inspect the engine compartment for gasoline fumes or leaks, and operate the blower for at least five minutes. Run your blower when operating at slow speeds. If fuel vapors are present, do not start the engine. Check all hoses and fittings to determine the source of the vapor. Make the necessary adjustments or take the boat to your CROWNLINE dealer.

⚠ DANGER

Fire or explosion hazard from fumes accumulating in bilge area. Ventilate the engine compartment by running the blower for five minutes, especially after repairing or refueling. Check for fuel spills or leaks. If you smell gasoline vapor or see liquid gasoline, DO NOT start the engine.

Engine

Refer to your Engine Operation and Maintenance Manual for recommended precautions, service, scheduled maintenance, repair and fluid check intervals.

Discharge of Oil

The Federal Water Pollution Control Act prohibits the discharge of oil or oily waste into or upon the navigable waters of the United States or the waters of the contiguous zone. Such discharge causes a film or sheen upon, or a discoloration of, the surface of the water, or causes a sludge or emulsion beneath the surface of the water. Violators are subject to a fine of $5,000.

Fuel System

IMPORTANT: Check for fuel leaks frequently. Be sure to repair any problems immediately. Any replacement of parts or repairs to the fuel system should be performed by a trained marine mechanic. See your CROWNLINE dealer for parts and repair.

1. Starting at the fuel tank, inspect the complete fuel system for leaks.
2. Inspect fuel lines and hoses for wear, kinks, cracks or deterioration.

3. Inspect fuel line fittings, fuel system components, or carburetor and fuel pump mounting to make sure components are secure.
4. Inspect for wear or damage to the fuel ventilation ducts and clamps.
5. If your boat has a stand-alone fuel tank vent, inspect the vent screen (located outside of deck) for obstructions.

IMPORTANT: Keep fuel tanks filled during the boating season to prevent moisture condensation.

Drive Unit

Refer to your Engine Operation and Maintenance Manual for recommended service, scheduled maintenance, repair and fluid check intervals.

Propeller

⚠ CAUTION

- **A propeller can be very sharp. Be careful when you handle it. Wear a pair of protective gloves when handling any propeller.**
- **Remove your key from the ignition and remove the emergency stop switch clip from the switch to prevent accidental starting of the engine.**
- **DO NOT reuse any mounting hardware if the manufacturer instructs you to NOT reuse.**
- **DO NOT use a damaged propeller. A damaged propeller can damage your engine and craft.**

The propeller shipped with your boat is the size CROWNLINE Boats, Inc. recommends for the best overall performance. However, factors such as altitude, temperature, load and bottom growth may affect performance. Also, periodic inspection of the propeller for excessive wear or damage is recommended.

Contact your CROWNLINE dealer for specific details.

NOTE: If you change to a different size propeller, CROWNLINE Boats, Inc. assumes no responsibility for any damage resulting from this change.

Power Steering System

If your boat is equipped with a rack-and-pinion power steering system, periodic inspection and lubrication is required to maintain safe operating conditions.

Normal Use – Inspect and lubricate every 50 hours of operation or 60 days.

High Level Use – Inspect and lubricate every 25 hours of operation or 30 days.

NOTE: Saltwater operation is considered high-level use.

1. Lubricate control valve through grease fitting with multi-purpose lubricant until grease is visible around rubber boot.
2. Coat power steering output shaft and exposed steering cable end with multipurpose lubricant.
3. Lubricate cable end guide pivot point with SAE 30W engine oil.
4. Run engine for 20 to 30 minutes and check power steering fluid level. If low, add type “A” automatic transmission fluid to bring level up to the FULL mark on the dipstick.

NOTE: The correct fluid level in a cold engine is up to, but not beyond, the ADD mark. This allows for oil expansion when the engine is hot.

5. Inspect all hydraulic lines and hoses for leaks. Ensure all lines and hoses are free from friction and exposure to extreme heat. Tighten all fittings and clamps as required.
6. Check all bolts for tightness.
7. Check pump pulley drive belt for wear and proper tension.

IMPORTANT: Avoid over-tightening drive belts. Belts that are too tight can cause failure or excessive bearing wear.

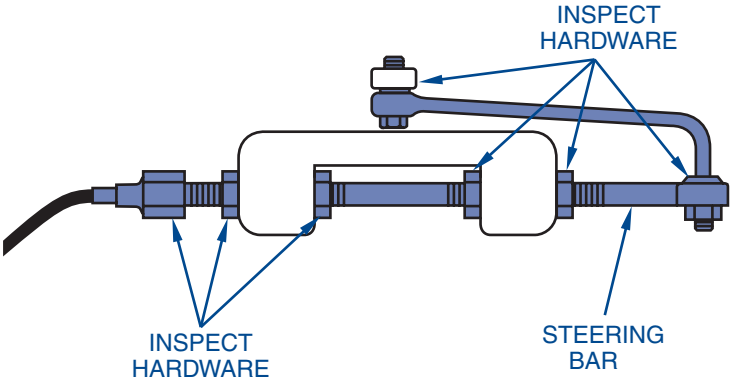

TYPICAL OUTBOARD ENGINE STEERING LINK

KC-1645-CL

Figure 5-1

Bilge

Inspection

The bilge should always be checked after launch. A small amount of water in the bilge is normal. Large amounts of water or any signs of fuel or oil require immediate investigation. Never pump fuel or oil overboard when your boat is in the water.

Cleaning

1. Remove all sand, silt, dirt or foreign material prior to activating the bilge pump to remove excess bilge water.
2. Ensure all limber holes are open and strainers are clean.
3. Use a bilge-cleaning product to remove any obvious oil stains. Consult your CROWNLINE dealer for recommended types of approved cleaner.

IMPORTANT: Never use flammable solvents (e.g., kerosene) for bilge cleaning.

TROUBLESHOOTING CHART

The troubleshooting procedures listed in this chart are designed to correct minor malfunctions for the engine, performance and vibration. The chart displays areas that could be at fault and are presented in the order of probable occurrence. Use common sense and always refer to the Engine Operation and Maintenance Manual. If the malfunction appears too complicated or unsafe, contact your CROWNLINE dealer, if possible; otherwise, contact a local marina for information regarding a marine mechanic.

⚠ WARNING

Disconnect battery cables before performing all inspections, checks and repairs.

Problem	Probable Cause	Corrective Action
Engine will not crank (ignition system)	Throttle lever in wrong position	Check position of throttle lever to ensure it is in the NEUTRAL position.
	Loose wire in starting circuit.	Tighten all wiring connections.
	Ignition switch defective	Test switch continuity. Replace switch as required.
	Starter solenoid defective	Replace solenoid.
	Battery switch in OFF position	Turn dual battery switch to battery setting 1 or 2, if equipped.
	Battery dead	Recharge or replace battery.
	Hydrostatic lock	Remove spark plugs and crank engine. If engine cranks, water is getting into the cylinders from the exhaust system or from a possible gasket leak. If water gets into the engine through the exhaust line, there is improper draining of exhaust system. Contact your CROWNLINE dealer or a qualified marine mechanic to correct problem.
Engine cranks but will not start (fuel system)	Engine stop switch lanyard pulled off the switch	Reinstall lanyard.
	Lack of fuel	Open shutoff valve, clean filter, check fuel level and check anti-siphon valve.

Problem	Probable Cause	Corrective Action
Engine cranks but will not start (fuel system) (cont.)	Improper starting procedure	See Engine Operation and Maintenance Manual to review starting procedure.
	Distributor cap brush cracked or broken	Replace brush.
	Choke plate sticking	Check thermostatic spring housing adjustment.
	Clogged fuel filter	Check and replace fuel filter.
	No fuel reaching carburetor (providing all fuel valves are open)	Check fuel pump, fuel pump filter, carburetor fuel filter and fuel tank line for cracked flanges or restricted fittings. Check anti-siphon valve.
	Engine flooded	Do not attempt to start engine for at least five minutes. For hot engine, fully advance throttle (make sure throttle lever is in neutral), and crank engine.
	Fuel contaminated	Inspect for water or other contaminants in fuel. If contaminated, drain tank and flush with fresh fuel.
Low cranking speed	Loose or dirty electrical connections or damaged wiring	Check all related electrical connections and wires.
	Battery bad	Test battery. (See Engine Operation and Maintenance Manual.)
	Engine oil too heavy for current temperature	Drain oil and refill with correct grade and viscosity oil. (See Engine Operation and Maintenance Manual.)
Starter will not crank engine	Battery discharged	Charge battery; change battery selector switch to ALL, if equipped.
	Battery cables	Clean terminals.
	Loose connection in starting circuit	Check and tighten all connections.
	Starter switch defective	Replace switch.
	Starter motor brushes dirty	Clean or replace brushes.
	Starter drive jammed	Loosen starter motor, then free jammed gear.

Problem	Probable Cause	Corrective Action
Poor acceleration	Accelerating pump bad	Replace.
	Throttle not fully open	Inspect cable and linkages for binding, obstructions or loose fasteners.
	Ignition or carburetor faulty	Service ignition system and carburetor.
	Flame arrestor dirty or air intake obstructed	Clean flame arrestor and check air intake.
	Engine overheating	Check engine temperature. (See Engine Operation and Maintenance Manual.)
Engine runs but is misfiring.	Spark plug(s) fouled	Remove, clean or replace.
	Spark plug wires wet	Wipe dry, inspect and replace damaged wires.
	Distributor carbon tracked	Clean or replace as required.
	Ignition wires loose	Inspect all wire connections.
	Engine cold and choke improperly set	Check Engine Operation and Maintenance Manual for proper choke setting.
	Fuel pump defective	Repair or replace as required.
	Fuel filter partially clogged	Clean or replace fuel filter.
	Carburetor mixture incorrect	See Engine Operation and Maintenance Manual for proper carburetor adjustment.
	Fuel contaminated	Drain fuel tank, flush clean and replace fuel filter.
Excessive fuel consumption	Flame arrestor restricted	Remove flame arrestor and clean.
	Fuel pump faulty	Repair or replace as required.
	Flame arrestor screen dirty	Clean or replace as required.
	Distributor breaker points or spark plugs improperly set or bad	Clean and set or replace breaker points and spark plugs.

Problem	Probable Cause	Corrective Action
Excessive fuel consumption (cont.)	Engine timing incorrect	Time engine.
	Choke not properly adjusted	Adjust choke as required.
	Float level too high	Reset float level as required. (See Engine Operation and Maintenance Manual.)
Blue exhaust smoke	Engine oil level too high	Drain off excess oil.
	Oil too thin	Drain and replace oil. (See Engine Operation and Maintenance Manual.)
	Oil overheated	Check cooling system.
Black or gray exhaust smoke	Fuel mixture too rich	Adjust carburetor.
	Choke stuck	Lubricate and adjust.
	Poor carburetor setting	Readjust carburetor. (See Engine Operation and Maintenance Manual.)
	Carburetor fuel level too high	Adjust float in carburetor.
	Flame arrestor clogged	Clean or replace as required.
White exhaust smoke	Engine misfiring	See Engine Operation and Maintenance Manual.
	Spark plugs dirty or not gapped correctly	Clean, adjust gap or replace.
Low oil pressure	Insufficient oil in crankcase	Check and add correct grade and viscosity oil. Visually check engine for leaks.
	Excess oil in crankcase	Check and remove excess amount of oil. Check for cause of excess oil (improper filling, bad fuel pump, etc.).
	Diluted or improper grade and viscosity oil	Change oil and oil filter, being sure to use the correct grade and viscosity oil.
	Oil leak in pressure line	Inspect all oil lines and tighten all connections as necessary.

Problem	Probable Cause	Corrective Action
No oil pressure	Gauge, gauge tube, or oil line defective	Replace gauge or tube, and tighten or replace line as necessary.
	No oil in engine	Fill with proper grade and viscosity oil. (See Engine Operation and Maintenance Manual.)
High oil pressure	Oil grade too heavy	Drain oil and replace with proper grade. (See Engine Operation and Maintenance Manual.)
	Dirt or obstruction in oil lines	Drain and clear oil system. Check for bent or flattened oil lines and replace as required.
Knocking or pinging	Fuel incorrect	Drain tank and replace with proper fuel.
	Timing incorrect	Time engine. (See Engine Operation and Maintenance Manual.)
	Pre-ignition occurring	Clean or replace spark plugs and check engine timing.
	Engine overheated	Check engine cooling system.
	Cooling system problem	Check water intake connections for leaks.
Rough running	Choke not operating	Check choke linkages for binding or obstruction.
	Fuel pump faulty	Refer to Engine Operation and Maintenance Manual for fuel pump testing procedures.
	Idle speed too low	Check idle speed and adjust.
	Ignition system components faulty	Service ignition system. (See Engine Operation and Maintenance Manual.)
	Fuel filter clogged	Replace fuel filter.
	Fuel contaminated	Inspect fuel for water or other contaminants. If contaminated, drain tank and flush with fresh fuel.

Problem	Probable Cause	Corrective Action
Rough running (cont.)	Fuel lines or fuel tank vent line kinked or clogged	**⚠ WARNING** **Wear protective eyewear when performing compressed air cleaning.** Use compressed air (20 psi or less) to blow out obstruction. Replace line if kinked.
	Flame arrestor plugged with foreign material or air intake hose obstructed	Clean flame arrestor and check hose.
Engine overheating	Sending or receiving unit bad	Replace unit(s).
	Wiring connections loose at sending or receiving unit	Tighten all connections.
	Impeller in seawater pump worn or broken	Replace impeller.
	Oil cooler clogged	Remove obstruction.
	Exhaust lines plugged	Remove obstruction.
	Ignition timing late	Time engine.
	Choke valve stuck closed	Free choke valve.
	Water pump suction hose collapsed	Install new hose.
	Belts loose or worn	Adjust or replace belts as required.
	Water intake restricted	Clean water intake.
Sludge in oil	Oil changes infrequent	Drain and refill with proper grade and viscosity oil.
	Dirty oil filter	Replace oil filter.
	Water in oil	Drain and refill. If problem persists, check for cracked block, or defective head gasket and cracked head.

Problem	Probable Cause	Corrective Action
Poor performance	Propeller damaged or improper	Inspect propeller and replace if required.
	Buildup of marine growth on hull	Clean hull.
	Excessive water in bilge area, boat overloaded or improper distribution of load	Pump out bilge area. Inspect for causes related to excess water. Reduce or redistribute load.
Vibration	Hull bottom fouled or damaged	Inspect, clean or repair as required.
	Engine mounting bolts loose	Inspect and tighten as required.
	Propeller shaft damaged	Replace shaft.
	Propeller bent or pitch not true	Inspect propeller and replace as required.
	Engine out of alignment	See Engine Operation and Maintenance Manual.

EXTENDED STORAGE

This section will help you prepare your craft for extended storage. For areas that do not require seasonal storage, CROWNLINE Boats, Inc. recommends a thorough annual inspection.

IMPORTANT: In regions where temperatures fall below freezing, all engine plugs must be removed and all water systems must be drained before storing your CROWNLINE for the winter. Failure to take these measures will seriously damage the engine and water systems.

Preparing for winter lay-up is important. In frigid zones, pay special attention to any items that can be damaged by freezing. Freeze damage is not covered by warranty.

The following items may require special attention for extended or off-season storage. Some of the items may not be included in your CROWNLINE. Have your CROWNLINE dealer perform extended or off-season procedures for the following:

- Air conditioning
- Batteries
- Engine cooling and exhaust systems
- Fuel system
- Generator
- Water systems

LIFTING THE CRAFT

Unless your boat is trailerable, have your CROWNLINE dealer or qualified marina personnel lift your CROWNLINE out of the water for you. Each CROWNLINE boat has main frame components designed to support the weight of the boat when it is being lifted out of the water. Severe gelcoat crazing or more serious hull damage can occur if the lifting slings exert pressure on the gunwales. Flat, wide, belting-type slings MUST be used. DO NOT use cable-type slings.

The spreader bar at each sling must be as long as the distance across the widest point of the boat that the sling surrounds.

- Drain the bilge and all water systems and remove any gear. DO NOT hoist the boat with more than a minimal amount of water in the bilge or any system.
- Prepare for storage by minimizing the amount of fuel you have on-board, especially if you have large capacities. Fuel weighs approximately 6 pounds per gallon (0.45 kg per liter). Thirty gallons (113.6 liters) of gasoline weighs approximately 180 pounds (81.6 kg). Gasoline becomes more dense as the temperature drops, and gasoline that is added when the temperatures are lower can weigh more. If you must dispose of fuel, do it in a safe, environmentally conscious manner. DO NOT pollute the waterways.
- Position the slings so they do not interfere with the underwater fittings on your hull, or contact the propeller or sterndrive.
- DO NOT use deck cleats to lift.
- DO NOT use a sling to store your boat out of the water. Use only lifting devices which will support the hull bottom for out-of-water storage only.
- Consult your CROWNLINE dealer to select the best and safest option to lift your craft.

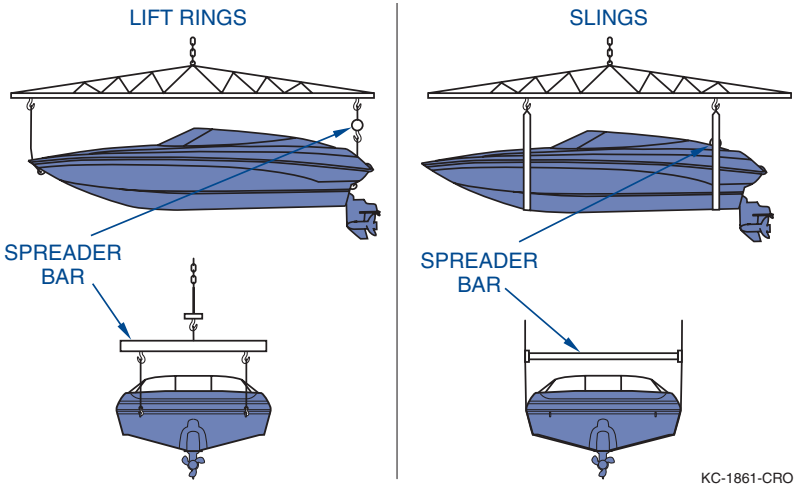

Figure 5-2

PRIOR TO STORAGE

Interior Cleaning

Be sure to clean the interior of your boat thoroughly. A thorough cleaning at the end of the season will pay off when you get underway next spring.

1. Thoroughly clean all interior surfaces including cupboards, cabinets and drawers.
2. Make sure to remove everything that can hold moisture and cause mildew. Remove all cushions, mattresses, curtains, blankets and sheets, pillows, towels, linen and clothing and store off the boat in a cool, dry location.
3. If it is necessary to store cushions on-board:
   A. Open zippers and elevate cover away from foam padding.
   B. Place a small plastic bowl inside to allow for air circulation.
   C. Seats that can be folded should be stored in the DOWN position.
   D. Use plastic seat covers to keep out dampness and protect against mildew.
4. Make sure the cabin is well-ventilated.
5. Clean and dry all life jackets and other safety equipment. If left on-board, leave them out so air can circulate around them.
6. Clean and thoroughly dry the bilge. Remove rags, sponges or other cleaning materials.
7. Let the interior completely air out for a couple of days.
8. If a boat cover is used, make sure to use a breathable fabric that will allow ample air circulation.

IMPORTANT: After cleaning, make sure that everything is thoroughly dried and air can circulate freely throughout the inside of your boat.

Hull

1. Scrape off any barnacles or crusted marine growth.
2. Scrub hull thoroughly to remove marine growth and scum.
3. Inspect underwater gear and propeller(s) for excessive wear or damage.
4. Remove hull drain plug and store in a safe place.

Deck

1. Wash deck, superstructure and cockpit.
2. Clean ALL deck hardware, cleats, rails and instruments, and apply a coat of nonabrasive metal polish or wax.
3. Clean indoor/outdoor carpet.

Refer to Interior Care and Exterior Care for specific cleaning procedures.

ENGINE

Cooling System

Drain cooling system for extended storage or when freezing weather threatens. This will also help prevent corrosion damage.

IMPORTANT: Make sure craft engine is level during extended storage.

1. While draining the cooling system, make sure that plug openings are completely clear and free of sand, silt, marine growth and rust.
2. Additional corrosion and freeze-up protection can be accomplished by filling the cooling system with nontoxic antifreeze and freshwater mixture. Mix nontoxic antifreeze according to label directions for the lowest expected temperature.
3. Refer to Engine Owner/Service Manual for detailed winterizing and storage instructions.

Lubrication

1. Drain oil when engine is warm in order to drain the maximum volume of oil.

NOTE: If engine oil contains sludge, flushing oil should be used. Refer to Engine Owner/Service Manual for detailed winterizing and storage instructions.

2. Replace engine oil filter.
3. Fill each crankcase with required amount of recommended engine oil.
4. Shut off fuel line and start engine.
5. Pour or spray fogging oil through carburetor air intake. Continue to pour or spray fogging oil until engine stops. Engine should stop from lack of gasoline.
6. Clean and lubricate all linkage.
7. Spray entire exterior of engine with rust and corrosion inhibitor.
8. Have engine alignment checked and adjusted by a qualified technician.
9. Inspect all gaskets and seals, grease U-joints, and change gear oil.
10. Remove propeller. Clean and lubricate the propeller shaft and check for damage.

Fuel System

Add a gasoline stabilizer solution to the fuel tank. Follow the product manufacturer's recommended procedure.

Battery

⚠ WARNING

Explosion, fire or burn hazard from vented fumes or burns from battery electrolyte can cause death or serious injury.

- **Wear eye protection and rubber gloves when working on or around batteries.**
- **DO NOT charge or use a battery booster to start your engine at the battery.**
- **Charge the battery outside of the boat unless your boat is equipped with a battery charger or battery jumping studs.**
- **DO NOT smoke or bring a flame near a battery at any time.**
- **DO NOT have your head directly above a battery when making or breaking electrical connections.**
- **DO NOT use a metal object to spark between battery posts to check if the battery is charged.**
- **DO NOT disconnect or reconnect battery cables if gasoline fumes are present.**

Remove battery and store away from freezing temperatures.

NOTE: DO NOT store the battery on-board. DO NOT place the battery directly on concrete, brick or dirt floors. Keep the battery on a wooden pallet in a cool, dry place.

1. Clean outside battery case, terminals, and battery clamps with a solution of baking soda and water.

NOTE: DO NOT allow baking soda and water solution to enter cells.

2. Lightly sand battery posts and clamps with fine-grit emery cloth.
3. Apply a light coat of petroleum jelly or anticorrosion spray to the cover end of the battery cables.
4. Recharge the battery monthly or have a continuous trickle charge applied to the battery during storage to increase battery life.

AIR CONDITIONER

1. Disconnect the pump plug and drain the seawater circuit. The system is self-purging to ensure that all water is drained.
2. Pump a nontoxic antifreeze solution through the condensing coil to displace any residual water in the system.

FRESHWATER SYSTEM

1. Turn off water heater, if equipped.
2. Open all faucets and allow pump to empty water tank and intake lines. Run pump dry, for one to two minutes, before turning off pump. Running pump when dry for this short period will not damage it.
3. Open all drains.
4. Disconnect discharge and intake hoses from pump.
5. Allow pump to run to force all water from unit.
6. Reconnect all hoses, close all drains and leave all faucets open.
7. Remove water pump fuse to prevent cycling during storage.

MARINE SANITATION DEVICE (MSD)

Improper winterizing can cause your MSD to fail. In saltwater environments, the toilet bowl should be filled with fresh water and allowed to stand for several days. This will ensure that any accumulated salt has sufficient time to dissolve.

1. Pump system dry and flush with fresh water.
2. Fill system with nontoxic antifreeze.

RECOMMISSION TO SERVICE

For maximum safety, make sure you inspect the fuel system carefully.

1. Inspect the fuel system and all associated equipment for proper connections, wear, leaks or other damage. Always be alert for fuel vapors.

IMPORTANT: For detailed information on relaunching, refer to the Engine Operation and Maintenance Manual.

2. Clean battery terminal posts with wire brush or steel wool before reinstallation.
3. Check charge on battery. Recharge or replace if necessary.
4. Inspect all battery wiring. Repair or replace if necessary.
5. Attach cables and tighten cable clamps.

IMPORTANT: DO NOT apply petroleum jelly or grease before connecting and tightening clamps.

6. Apply petroleum jelly or quality marine-grade grease on posts and clamps to eliminate air pockets and acid buildup. Make sure the battery clamps are secure.
7. Coat hull drain plug threads with petroleum jelly and reinstall.
8. Clean the bilge.
9. Reinstall the exhaust drain plug.

10. Inspect all exhaust connections for carbon monoxide (CO) leakage. Adjust and repair as required.
11. Test navigational lights and other lighting on-board.
12. Inspect all wiring for fraying, wear, loose connections, and other damage.
13. Inspect all switches, controls and other related equipment for proper operation.
14. Inspect the Engine Stop Switch system and make sure the lanyard is not frayed or damaged.
15. Inspect all safety equipment for proper operation and physical condition.

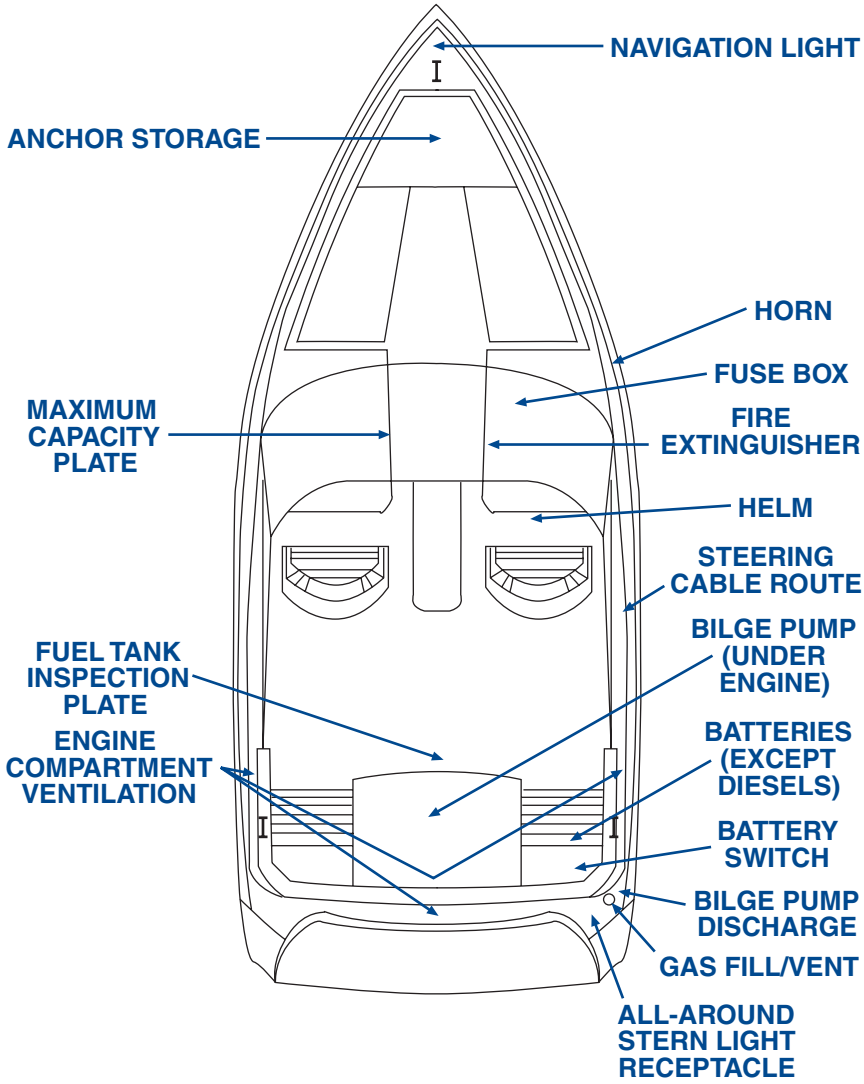

CRO_024

Figure 6-1

Typical Stern Drive Equipment

BOAT SPECIFICATIONS

Specifications	180 BR	19 SS	200 LS	210 LS	21 SS
L.O.A.	18' (5.5 m)	19' (5.8 m)	18'8" (5.7 m)	19'6" (5.9 m)	20'10" (6.35 m)
Draft Up	13" (33 cm)	13" (33 cm)	18" (46 cm)	18" (46 cm)	16" (41 cm)
Draft Down	27" (69 cm)	27" (69 cm)	32" (81 cm)	32" (81 cm)	30" (76 cm)
Maximum Capacity	1160 lbs (526 kg)	1250 lbs (567 kg)	1370 lbs (621 kg)	1400 lbs (635 kg)	1442 lbs (654 kg)
Person Capacity**	1160 lbs (8 persons or 526 kg)	1160 lbs (8 persons or 526 kg)	1160 lbs (8 persons or 526 kg)	1301 lbs (9 persons or 590 kg)	1442 lbs (10 persons or 654 kg)
Weight*	2450-2600 lbs (1112-1179 kg)	2900-3100 lbs (1315-1406 kg)	3400-3600 lbs (1545-1634 kg)	3600-3800 lbs (1633-1724 kg)	3500-3700 lbs (1588-1678 kg)
Fuel Capacity	27 gal. (102 L)	27 gal. (102 L)	37 gal. (140 L)	37 gal. (140 L)	41 gal. (155 L)
Freshwater Capacity			8.5 gal. (32 L)	8.5 gal. (32 L)	
Maximum Rated Engine	225 PHP (168 kw)	270 PHP (201 kw)	270 PHP (201 kw)	300 PHP (224 kw)	320 PHP (239 kw)
Holding Tank Capacity					
Design Category (European Certification)	C	C	C	C	C
AC					
DC	12 Volts	12 Volts	12 Volts	12 Volts	12 Volts

Blank Space - This information does not apply to this model.

NA - Information not available

*Weights are estimates and can vary from manufacturing processes and the added options and equipment.

**CE requirements may differ for European capacity

Specifications	220 CCR	220 EX	220 LS	23 SS	230 LS
L.O.A.	21'1" (6.4 m)	20'6" (6.2 m)	20'6" (6.2 m)	23'3" (7.1 m)	22' (6.7 m)
Draft Up	18" (46 cm)	20" (51 cm)	18" (46 cm)	18" (46 cm)	19" (48 cm)
Draft Down	32" (81 cm)	34" (86 cm)	32" (81 cm)	32" (81 cm)	33" (84 cm)
Maximum Capacity	1160 lbs (526 kg)	1442 lbs (654 kg)	1442 lbs (654 kg)	1583 lbs (718 kg)	1583 lbs (718 kg)
Person Capacity**	1160 lbs (8 persons or 526 kg)	1442 lbs (10 persons or 654 kg)	1442 lbs (10 persons or 654 kg)	1583 lbs (11 persons or 718 kg)	1583 lbs (11 persons or 718 kg)
Weight*	4100-4300 lbs (1816-1950 kg)	4250-4400 lbs (1930-1996 kg)	3700-3900 lbs (1680-1771 kg)	4000-4200 lbs (1814-1905 kg)	4100-4300 lbs (1816-1950 kg)
Fuel Capacity	60 gal. (227 L)	45 gal. (170 L)	45 gal. (170 L)	62 gal. (235 L)	62 gal. (235 L)
Freshwater Capacity	10 gal. (38 L)	15 gal. (57 L)			10 gal. (38 L)
Maximum Rated Engine	320 PHP (239 kw)	320 PHP (239 kw)	320 PHP (239 kw)	425 PHP (317 kw)	320 PHP (239 kw)
Holding Tank Capacity					
Design Category (European Certification)	C	C	C	C	C
AC	120V-60 Hz (240V-50 Hz)				
DC	12 Volts	12 Volts	12 Volts	12 Volts	12 Volts

Blank Space - This information does not apply to this model.

NA - Information not available

*Weights are estimates and can vary from manufacturing processes and the added options and equipment.

**CE requirements may differ for European capacity

Specifications	235 CCR	240 EX	240 LS	250 CR	252 EX
L.O.A.	23' (7.0 m)	22'6" (6.9 m)	23' (7.0 m)	24'8" (7.5 m)	23'6" (7.2 m)
Draft Up	18" (46 cm)	21" (53 cm)	19" (48 cm)	23" (58 cm)	21" (53 cm)
Draft Down	33" (84 cm)	35" (89 cm)	35" (89 cm)	38" (97 cm)	35" (89 cm)
Maximum Capacity	1300 lbs (590 kg)	2065 lbs (937 kg)	1875 lbs (850 kg)	1344 lbs (610 kg)	2065 lbs (937 kg)
Person Capacity**	1300 lbs (9 persons or 590 kg)	1865 lbs (13 persons or 846 kg)	1725 lbs (12 persons or 782 kg)	1344 lbs (9 persons or 610 kg)	1865 lbs (13 persons or 846 kg)
Weight*	4200-4400 lbs (1907-1998 kg)	4800-5000 lbs (2179-2268 kg)	4700-4900 lbs (2132-2223 kg)	6400-6600 lbs (2906-2996 kg)	5000-5200 lbs (2268-2359 kg)
Fuel Capacity	77 gal. (291 L)	50 gal. (189 L)	50 gal. (189 L)	75 gal. (284 L)	50 gal. (189 L)
Freshwater Capacity	10 gal. (38 L)	15 gal. (57 L)		26 gal. (98 L)	15 gal. (57 L)
Maximum Rated Engine	320 PHP (239 kw)	320 PHP (239 kw)	425 PHP (317 kw)	425 PHP (317 kw)	425 PHP (317 kw)
Holding Tank Capacity				26 gal. (98 L)	
Design Category (European Certification)	C	C	C	B	C
AC	120V-60 Hz (240V-50 Hz)			120V-60 Hz (240V-50 Hz)	
DC	12 Volts	12 Volts	12 Volts	12 Volts	12 Volts

Blank Space - This information does not apply to this model.

NA - Information not available

*Weights are estimates and can vary from manufacturing processes and the added options and equipment.

**CE requirements may differ for European capacity

Specifications	255 CCR	260 EX	260 LS	262 EX	270 BR
L.O.A.	24'6" (7.5 m)	24'6" (7.5 m)	24'6" (7.5 m)	24'6" (7.5 m)	26'1" (7.95 m)
Draft Up	24" (61 cm)	21" (53 cm)	24" (61 cm)	21" (53 cm)	21" (53 cm)
Draft Down	39" (99 cm)	35" (89 cm)	39" (99 cm)	35" (89 cm)	38" (97 cm)
Maximum Capacity	1442 lbs (654 kg)	2205 lbs (1000 kg)	2205 lbs (1000 kg)	2205 lbs (1000 kg)	Yacht
Person Capacity**	1442 lbs (10 persons or 654 kg)	2005 lbs (14 persons or 909 kg)	2005 lbs (14 persons or 909 kg)	2005 lbs (14 persons or 909 kg)	Yacht
Weight*	6000-6200 lbs (2722-2812 kg)	5400-5600 lbs (2449-2540 kg)	5400-5600 lbs (2449-2540 kg)	5400-5600 lbs (2449-2540 kg)	5300-5500 lbs (2404-2495 kg)
Fuel Capacity	62 gal. (235 L)	75 gal. (284 L)	75 gal. (284 L)	75 gal. (284 L)	84 gal. (318 L)
Freshwater Capacity	15 gal. (57 L)	15 gal. (57 L)	15 gal. (57 L)	15 gal. (57 L)	20 gal. (76 L)
Maximum Rated Engine	425 PHP (317 kw)	425 PHP (317 kw)	425 PHP (317 kw)	425 PHP (317 kw)	425 PHP (317 kw)
Holding Tank Capacity		15 gal. (57 L)	15 gal. (57 L)	15 gal. (57 L)	25 gal. (95 L)
Design Category (European Certification)	C	C	C	C	C
AC					
DC	12 Volts	12 Volts	12 Volts	12 Volts	12 Volts

Blank Space - This information does not apply to this model.

NA - Information not available

*Weights are estimates and can vary from manufacturing processes and the added options and equipment.

**CE requirements may differ for European capacity

Specifications	270 CR	275 CCR	315 SPORT	320 LS
L.O.A.	26'8" (8.1 m)	26'8" (8.1 m)	30'1" (9.2 m)	30'1" (9.2 m)
Draft Up	21" (53 cm)	24" (61 cm)	20" (51 cm)	
Draft Down	36" (91 cm)	39" (99 cm)	40" (102 cm)	
Maximum Capacity	Yacht	Yacht	Yacht	Yacht
Person Capacity**	Yacht	Yacht	Yacht	Yacht
Weight*	7200-7400 lbs (3266-3357 kg)	6500-6700 lbs (2948-3039 kg)	10,000-11,000 lbs (4536-4990 kg)	9100-9500 lbs (4128-4309 kg)
Fuel Capacity	75 gal. (284 L)	75 gal. (284 L)	139 gal. (526 L)	139 gal. (526 L)
Freshwater Capacity	26 gal. (98 L)	15 gal. (58 L)	25 gal. (95 L)	24 gal. (91 L)
Maximum Rated Engine	425 PHP (317 kw)	425 PHP (317 kw)	750 PHP (559 kw) Twins	640 PHP (477 kw)
Holding Tank Capacity	25 gal. (95 L)	6 gal. (23 L)	25 gal. (95 L)	25 gal. (95 L)
Design Category (European Certification)	B	B	B	C
AC	120V-60 Hz (240V-50 Hz)	120V-60 Hz (240V-50 Hz)	120V-60 Hz (240V-50 Hz)	
DC	12 Volts	12 Volts	12 Volts	12 Volts

Blank Space - This information does not apply to this model.

NA - Information not available

*Weights are estimates and can vary from manufacturing processes and the added options and equipment.

**CE requirements may differ for European capacity

CROWNLINE®

Crownline Boats, Inc.
11884 Country Club Road
West Frankfort, IL 62896

www.crownline.com

Part No. 59433

Printed In U.S.A.