Sea Ray Owner's Manual

Sea Ray

310 Sundancer®

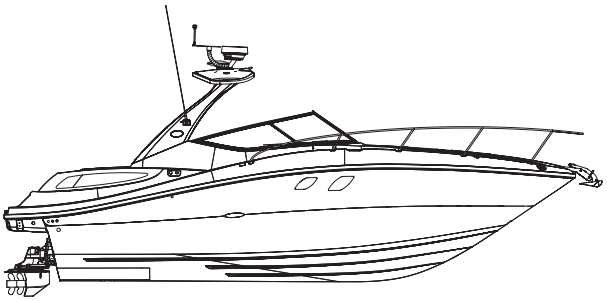

Owner's Manual Part Number: MRP 1848048

WELCOME

Congratulations on becoming the new owner of the world's most prestigious boat. We at Sea Ray® Boats, Inc. welcome you into our worldwide and ever-expanding family of boating enthusiasts.

The Owner's Manual Packet, to be kept on board your Sea Ray, gives you important information on all the features of your Sea Ray. For years of trouble-free boating take the time to carefully review the information in your Owner's Manual Packet and really get to know your boat. **Have everyone who will operate your boat read this manual.**

The Owner's Manual Packet contains the following:

- **Owner's Manual**

The Owner's Manual gives you important operating and safety information, as well as reminding you about your responsibilities as a boat owner/operator.

- **Original Equipment Manufacturer (OEM) Information**

This section of your Owner's Manual Packet contains information from the manufacturers of equipment installed on your boat. Examples include the engine, engine control and steering system. Throughout the Owner's Manual you will be referred to information provided by manufacturers of specific systems.

Because your purchase represents a substantial investment, we know you will want to take the necessary measures to protect its value. We have outlined a program for proper operation, periodic maintenance and safety inspections. We urge you to follow these recommendations. If you have questions which are not fully covered by the Owner's Manual Packet, please consult your authorized dealer for assistance.

Thank You For Selecting A Sea Ray®!

Bon Voyage

THIS PAGE LEFT INTENTIONALLY BLANK

Introduction

1. This Manual

The material here and in the rest of the Owner's Manual Packet:

- Gives you basic safety information;
- Describes the features of your boat;
- Describes the equipment on your boat;
- Describes the fundamentals of boat use; and
- Contains service and maintenance information.

You must learn to operate this boat as well as read, understand and use this manual.

What this manual does not give you is a course in boating safety, or how to navigate, anchor or dock your boat. Operating a power boat safely requires more skills, knowledge and awareness than is necessary for a car or truck.

2. Your Responsibilities

For your safety, the safety of your passengers, other boaters and people in the water, you must:

- Take a boating safety course;
- Get instruction in the safe and proper handling of your boat;
- Understand and follow the "rules of the road";
- Learn how to navigate.
- Registration: In addition to the registration requirements for your boat in the state where it is used most frequently, many states require additional registration when an out-of-state boat is used within their boundaries. Contact state boating authorities or any marine dealer for registration requirements.

3. Sources of Information

In North America, contact one of the following for boating courses:

- U.S. Coast Guard Auxiliary
- U.S. Power Squadron
- Canadian Power and Sail Squadrons
- Red Cross
- State Boating Offices
- Yacht Club

Contact your dealer or the Boat/U.S. Foundation at
1-800-336-2628

Outside of North America, contact your boat dealer and/or your governmental boating agency for assistance.

A book that provides a comprehensive background in boating is Chapman - Piloting, Seamanship and Small Boat Handling, by Elbert S. Maloney, published by Hearst Marine.

4. Dealer Responsibilities

In addition to a predelivery check and service of the boat, your dealer is to give you:

- A description and demonstration of the safety systems, features, instruments and controls on your boat;
- An orientation in the general operation of your boat;
- An "In Service Check List" form completed by you and the dealer after your inspection of the boat;
- A review of all warranty information and how to obtain warranty service;
- The complete Owner's Manual Packet.

If you do not receive all of these materials, or have any questions, contact your dealer or call:
1-800-SRBOATS.

5. Warranties

Your boat comes with several warranties. Each component and/or system on your boat has its own warranty that will be found with the specific information and manual for that component. These are included with your Owner's Manual Packet. Locate and read the individual warranties; then put them together for easy future reference. The Sea Ray® warranty is on the warranty information sheet in your packet.

6. Hull Identification Number (HIN)

The "Hull Identification Number" located on the starboard side of the transom, is your boat's most important identifying factor and must be included in all correspondence and orders. Failure to include it creates delays. Also of vital importance is the engine serial number and part number when writing about or ordering parts for your engine. Refer to the Engine Operator's Manual for location of engine serial number and record it for future reference.

Hull Identification Number Location (Fig. iv.1)

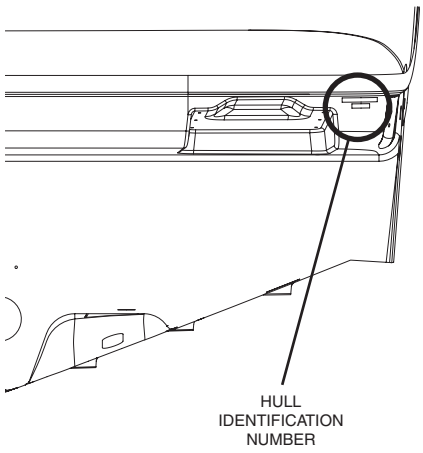

7. Manufacturer's Certification

As a boat manufacturer, Sea Ray builds their products to guidelines established under the Federal Boat Safety Act of 1971. The Act is promulgated by the United States Coast Guard who has authority to enforce these laws on boat manufacturers that sell products in the United States. Sea Ray ensures that all of its products comply with these laws.

The NMMA, National Marine Manufacturers Association, provides Sea Ray with a third party certification. The NMMA is an organization that represents the marine industry and assists manufacturers, boat dealers, marinas, repair yards and component suppliers in areas of legislation, environmental concerns, marine business growth and state and federal government agency interaction. The third party certification that Sea Ray participates in, uses the well known Standards and Recommended Practices of the ABYC, American Boat and Yacht Council.

Sea Ray Boats participates extensively in the American Boat and Yacht Council which is a nonprofit organization that develops and publishes voluntary standards and recommended practices for boat and equipment design, construction, service and repair. We utilize all applicable ABYC standards in the construction of your Sea Ray boat.

Finally, Sea Ray sells their products world wide and as such must conform to the various rules and regulations required by other countries. Most notably, are the ISO standards in Europe which require the application of the CE (Common European) mark. This mark, much like the NMMA certification here in the US, gives you the boat owner specific information concerning your craft. For more on this, turn to Section 1 • Safety, subsections 8 and 13 which explains in detail the CE plate and its importance.

8. Service, Parts and Repair for Your Boat

When your boat needs service, parts or repair, take it to an authorized Sea Ray® dealer. To find a dealer in your area call:

Domestic: 1-800-SRBOATS
Fax: 1-314-213-7878
(International: 1-314-216-3333)
or on the Internet at www.searay.com

To find repair and parts facilities for the equipment installed on your boat, refer to the manual for that component.

If a problem is not handled to your satisfaction:

1. Discuss any warranty-related problems directly with the service manager of the dealership or your sales person. Give the dealer an opportunity to help the service department resolve the matter for you.

2. If a problem arises that has not been resolved to your satisfaction by your dealer, contact Sea Ray® Boats at 1-800-SRBOATS (International 1-314-216-3333) and the appropriate customer service department information will be provided to you.

About Your Limited Warranty

Sea Ray offers an express Limited Warranty on each new Sea Ray purchased through an authorized Sea Ray dealer. A copy of the Limited Warranty was included in your owner's manual packet. If for any reason, you did not receive a copy of the Limited Warranty, please contact your local dealer or call 1-800 SR BOATS for a replacement copy. This is a summary of several provisions of the Limited Warranty. Please read the Limited Warranty, which is the controlling document.

Under the Limited Warranty, Sea Ray covers: (a) structural fiberglass deck or hull defects which occur within five (5) years of the date of delivery; (b) parts founds to be defective in factory material or workmanship within one (1) year of the date of delivery; (c) laminate blisters resulting from defects in factory material or workmanship for five (5) years on a prorated basis.

Sea Ray's obligation under the Limited Warranty is limited to repair or replacement of parts that are judged defective by Sea Ray and does not include transportation, haul out, or other expenses. The foregoing is the **sole and exclusive** remedy provided by Sea Ray.

The Limited Warranty does not cover engines, stern drives, controls, propellers, batteries, trailers, or other equipment or accessories carrying their own individual warranties, nor does the Limited Warranty cover engines, parts or accessories not installed by Sea Ray. The Limited Warranty does not cover cosmetic gel coat finish. Boats used for commercial purpose are excluded from coverage. **See the Sea Ray Limited Warranty for other exclusions.**

SEA RAY EXPRESSLY DISCLAIMS THE IMPLIED WARRANTIES OF MERCHANTABILITY AND FITNESS. NEITHER SEA RAY NOR THE SELLING DEALER SHALL HAVE ANY RESPONSIBILITY FOR LOSS OF USE OF THE BOAT, LOSS OF TIME, INCONVENIENCE, COMMERCIAL LOSS OR CONSEQUENTIAL DAMAGES.

The unexpired term of the Limited Warranty may be transferred to a subsequent owner upon the new owner's request. The new owner can submit a request for warranty transfer, free of charge, via the searay.com website. Alternatively, the new owner can submit a written request to the Sea Ray Division of Brunswick Corporation, 2600 Sea Ray Blvd., Knoxville, TN 37914, accompanied by a Fifty Dollar ($50.00) processing fee.

Thank you for your decision to buy a Sea Ray.

The Sea Ray Limited Warranty is subject to change at any time at Sea Ray's discretion. The information contained herein is general information about the Limited Warranty for the owner's general knowledge, but does not alter or amend the terms of the Limited Warranty.

Introduction

1. This Manual iii
2. Your Responsibilities iii
3. Sources of Information....iii
4. Dealer Responsibilities iv
5. Warranties.... iv
6. Hull Identification Number (HIN) iv
7. Manufacturer's Certification v
8. Service, Parts and Repair for Your Boat v
About Your Limited Warranty vi

Section 1 • Safety

1. Safety Labels 1.1
2. Legally Mandated Minimum Required Equipment 1.2
3. Fire Extinguishing System 1.2
4. Carbon Monoxide 1.2
5. Lifesaving Equipment.... 1.4
6. Additional Recommended Equipment for Safe Operation 1.5
7. Impaired Operation 1.5
8. Load Capacity.... 1.6
   A. United States 1.6
   B. International 1.6
9. Power Capacity.... 1.6
10. Propellers.... 1.7
11. Stability 1.7
12. Maintain Control.... 1.7
13. Weather 1.8
14. Chart Your Course 1.9
15. Water Sports.... 1.9
   A. Swimming 1.9
   B. Skiing 1.10
   C. Diving.... 1.10
16. Emergency Situations.... 1.11
   A. Medical Emergency 1.11
   B. Water Rescue 1.11
   C. Fire.... 1.12
   D. Flooding, Swamping and Capsizing.... 1.12
   E. Collisions and Leaking.... 1.12
   F. Grounding.... 1.12
   G. Propulsion, Control or Steering Failure 1.13
17. Safety Hot Lines 1.13
18. International Requirements 1.13
19. Environmental Considerations.... 1.14
   A. Fuel and Oil Spillage.... 1.14
   B. Waste Disposal 1.14
   C. Excessive Noise 1.14
   D. Wake / Wash 1.15
20. Nautical Terms 1.15
21. Key to Symbols on Controls and Prints 1.16
22. Warning Label Locations 1.17

Section 2 • General Boat Arrangement

1. Docking/Lifting/Storage.... 2.1
   A. Cleats.... 2.1
   B. Supporting the Boat 2.1
2. Passenger Locations 2.2
3. Propulsion System.... 2.4
   A. Stern Drive Engines.... 2.4
   B. V-Drive Engines 2.4
4. Basic Boat Dimensions and Clearances 2.5
5. Deck Layout.... 2.6
6. Cabin Layout.... 2.7
7. Helm, Gauge & Switch Layout.... 2.8
8. Function and Location of Through-Hull Cutouts . 2.11
9. Description of Major Controls 2.13
   A. Gear Shift and Throttle Control 2.13
   B. Digital Throttle & Shift Control (Opt).... 2.14
   C. Power Trim Unit and Gauge 2.15
   D. Trim Tabs.... 2.15
10. Important Gauges.... 2.16
   A. SmartCraft™ Gauge System 2.16
   B. Tachometer 2.16
   C. Oil Pressure, Water Temperature, Speedometer and Fuel Gauges.... 2.16
   D. Magnetic Compass 2.17
11. Navigation and Anchor Lights.... 2.17

Section 3 • Using Your Boat

1. Pre-Launch, Launch and Post-Launch Checklist.. 3.1
2. Fueling the Boat.... 3.2
3. Boarding 3.3
4. Personal Flotation Devices (PFDs).... 3.3
5. Passenger Instruction and Location 3.3
6. Starting the Engine 3.4
7. Shifting to Drive the Boat 3.5
8. Stopping the Engine 3.6
9. Steering System 3.6
   A. Power Assisted (Stern Drives) 3.6
   B. Hydraulic Power Steering (V-Drives).... 3.7
10. Starting the Generator 3.7
11. Stopping the Generator 3.8
12. Shore Power 3.8
   A. To Connect and Turn on Shore Power 3.8
   B. To Disconnect Shore Power 3.10
   C. Maintenance for Shore Power Cable and Shore Power Inlet 3.11

Section 4 • Bilge & Underwater Gear

1. Bilge....4.1
   A. Fuel and Oil Spillage....4.1
   B. Drain Plug....4.1
   C. Bilge Pump....4.1
   D. Bilge Blower....4.2
2. Engine and Stern Drive....4.3
   A. Maintenance and Service....4.3
   B. Vibration and Causes....4.3
   C. Impact to Stern Drive....4.3
3. Underwater Gear....4.4
   A. Propellers General Information....4.4
   B. Propeller Selection....4.5
   C. Propeller Removal and Installation....4.5
4. Seacocks & Strainers....4.8
5. Bilge Layout....4.10

Section 5 • Fuel System

1. Fuel System....5.1
2. Diesel Fuel System (Optional)....5.3
   A. Fuel Filter (Diesel)....5.3
   B. Fuel Filter Maintenance (Diesel)....5.3
3. Fueling Precautions....5.4
   A. Static Electricity and the Fuel System....5.4
   B. General:....5.4
   C. Before and During Fueling Checklist:....5.5
   D. After Fueling Checklist:....5.5
4. Fuel Recommendations....5.6

Section 6 • Electrical System

1. DC System....6.1
   A. Direct Current (DC)....6.1
   B. Recommended Batteries....6.4
   C. Battery Switch....6.4
2. Ignition Protection....6.4
3. Fuses....6.4
4. Electronic Interface Module (EIM)....6.6
5. Main DC Breaker Panel....6.8
6. 12 Volt Accessory Receptacle....6.9
7. Lighting....6.9
8. AC System....6.9
9. Main Distribution Panel Controls and Functions 6.12
10. Shore Power....6.13
   A. Shore Power Cords....6.13
   B. Main Shore Power Breaker Box....6.13
   C. Shore Power....6.13
11. Generator (Optional)....6.13
12. Servicing the Main Distribution Panel....6.13
13. Battery Charger/Converter....6.13
14. Ground Fault Interrupter Receptacle (GFI)....6.14
15. Electrolytic Corrosion and Zinc Anodes....6.15
16. Marine Electronic Cathodic Anti-Corrosion System....6.16
17. Electrical Schematics....6.16

Section 7 • Options & Accessories

1. Layout and Accessory Locations....7.1
2. Carbon Monoxide Monitor....7.1
3. Air Conditioning & Heating (Optional)....7.1
4. Water System....7.2
   A. Sanitizing the Water System....7.3
   B. Water Pump and Filter....7.3
   C. Winterizing the Water System....7.4
   D. Shower System....7.4
   E. Transom Shower....7.5
   F. Dockside Water Inlet....7.5
   G. Fresh Water Wash Down Spigot....7.6
   H. Water Heater....7.6
5. Gray Water System (Option)
6. Head System....7.6
   A. Requirements for Operators....7.6
   B. VacuFlush® Head....7.7
   C. Holding Tank Operation....7.7
   D. Vent Filter....7.7
7. Macerator Discharge Pump with Seacock Interlock System (Optional)....7.8
8. Automatic Fire Extinguisher System....7.8
   A. Gasoline Engine Boats....7.9
   B. Diesel Engine Boats....7.9
   C. Manual Fire Extinguishing System Pull Handle.. 7.9
   D. Safety Pin....7.10
9. Entertainment System....7.10
   A. 12 Volt Stereo....7.10
   B. Salon Entertainment Center (Option)....7.10
10. Refrigerator....7.11
11. Canvas....7.11
12. Horn....7.12
13. Spot Light (Optional)....7.12
14. Underwater Lighting (Optional)....7.12

Section 8 • Required Inspection, Service & Maintenance

1. Summary Guide for Inspection, Service and Maintenance 8.1
2. Useful Service Information 8.3
3. Inspection, Service and Maintenance Protocol 8.4
   A. Bilge Area 8.4
   B. Topside and Supplies 8.5
4. Winterization Checklist for Boats Stored on Land 8.5
   A. Boat Storage 8.5
   B. Engines 8.5
   C. Battery(ies) 8.5
   D. Head System 8.6
   E. Water System 8.6
   F. Fuel Systems 8.6
5. Fitting out After Storage 8.7
   A. Fuel System 8.7
   B. Battery(ies) 8.7
   C. Miscellaneous 8.7
6. Security Considerations 8.7
7. Seacock Lubrication 8.8
8. Quick Reference Checklist 8.9
   A. Boarding the Boat* 8.9
   B. Preparing to Depart and After Launching 8.10
   C. While Underway 8.11
   D. Returning to Port 8.11
   E. Securing the Boat 8.12
   F. If the Engine Does Not Start 8.12
9. After Market Equipment Checklist 8.13
10. Maintenance Log 8.14

Section 9 • Care & Refinishing

1. Paint Cleaning Agents and Other Substances 9.1
2. Fiberglass and Gelcoat 9.1
3. Stains and Scratches 9.2
4. Permanently Moored or Docked Boats 9.2
5. Care for Bottom Paint 9.2
6. Topside Areas 9.2
   A. Stainless Steel and Alloy Fittings 9.2
   B. Salt Crystals 9.2
7. Gauge and Switch Panels 9.3
8. Acrylic Plastic Sheeting (Plastic Glass) 9.3
9. Canvas and Clear Vinyl 9.3
10. Exterior Upholstery Fabric 9.4
11. Interior Upholstery Fabric 9.4

Index

Information in this publication is based upon the latest product specifications available at printing. Sea Ray® Boats, Inc. reserves the right to make changes at any time, without notice, in the colors, equipment, specifications, materials and prices of all models, or to discontinue models. Should changes in production models be made, Sea Ray® is not obligated to make similar changes or modifications to models sold prior to the date of such changes.

Owner's Manual
310 Sundancer®
Printed in the U.S.A. July 2006
© Sea Ray Boats, Inc. • A Brunswick Company
MRP #1848048

Sea Ray Boats, Inc. 2600 Sea Ray Blvd., Knoxville, TN 37914
For information call 1-800-SRBOATS or fax 1-314-213-7878
(International 1-314-216-3333)

Internet Address: http://www.searay.com

Note: Not all accessories shown in pictures or described herein are standard equipment or even available as options.
Options and features are subject to change without notice.

The following are registered trademarks of the Brunswick Corporation: Sea Ray® & The SR Wave Logo

SAFE BOATING MEANS:

- Knowing the limitations of your boat;
- Following the rules of the road;
- Keeping a sharp lookout for people and objects in the water;
- Not boating in water or weather conditions that are beyond the boat's or the operator's capability;
- Never boating when the operator is under the influence of drugs or alcohol;
- Being aware of your passengers' safety at all times; and
- Reducing speed when there is limited visibility, rough water, nearby people in the water, boats, or structures.

Boating in beautiful weather and calm water conditions can be a wonderful experience. Pleasurable boating, however, requires considerably greater skills than operating a land vehicle. To obtain these skills, you must:

- Take a Coast Guard, U.S. Power Squadron or equivalent boating safety course. **Call the Boat/U.S. Foundation at 1-800-336-2628 for information on available courses.**
- Get hands-on training on how to operate your boat properly.

IN ADDITION:

- Maintain your boat and its safety and other systems as recommended in this manual.
- Have the boat inspected by a qualified mechanic or dealer, at least annually.
- Ensure that the Coast Guard required safety equipment is on board and functions. (See page 1.2).

1. SAFETY LABELS

Safety precautions are given throughout this manual and labels are mounted at key locations throughout the boat. This safety information advises the owner/operator and passengers of imperative safety precautions to follow when operating and/or servicing equipment.

- Fig. 1.17.1 thru 1.20.1 show the location of the safety labels on your boat.
- Do not remove or obstruct any safety label.
- Replace any label which becomes illegible. Replacement safety labels can be obtained by calling your dealer or Sea Ray at 1-800-SRBOATS (International 1-314-216-3333) for information on how to contact the manufacturing facility for your boat.

The meaning associated with each of the four basic types of label is:

⚠ DANGER

DANGER – Immediate hazards which WILL result in severe personal injury or death if the warning is ignored.

⚠ WARNING

WARNING – Hazards or unsafe practices which COULD result in severe personal injury or death if the warning is ignored.

⚠ CAUTION

CAUTION – Hazards or unsafe practices which could result in minor injury or product or property damage if the warning is ignored.

NOTICE

Information which is important to proper operation or maintenance, but is not hazard-related.

2. Legally Mandated Minimum Required Equipment

Consult your national boating law enforcement agency.

The following equipment is the minimum required by the U.S. Coast Guard for a boat 26' to less than 40' [7.9 meters to less than 12 meters] in length.

Personal Flotation Devices (PFD's): One Coast Guard approved Type I, II or III device is mandatory for each person aboard. One throwable Type IV device is also required to be on board. A Type V device is acceptable if worn for approved use. See Page 1.4 for a description of these PFD classifications. **Always wear a PFD when boating.**

Fire Extinguisher - Portable: If no fixed fire extinguishing system is installed in the engine and generator spaces, the U.S. Coast Guard requires **two** (2) **Type B-1 or one (1) Type B-2** fire extinguisher be on board. If your boat is equipped with a fixed fire extinguishing system in the engine and generator spaces, the U.S Coast Guard requires **one (1) Type B-1** fire extinguisher be on board. The American Boat and Yacht Council (ABYC) recommends that you have **three** (3) **Type B-1 ABC** fire extinguishers on board located outside the engine compartment, at the helm station and in the galley.

Whistle, Horn: You must have on board some means of making a loud sound signal, for example, whistle or horn.

Visual Distress Signals: If you operate your boat in coastal waters or on the Great Lakes, you must have visual distress signals for day and night use on board. At least three (3) U.S. Coast Guard approved pyrotechnic devices marked with date showing service life must be carried, be readily accessible, in serviceable condition and not expired. Store pyrotechnic signals in a well-marked waterproof container in a dry location.

Other: Your Sea Ray is equipped with the required navigation lights, engine exhaust and ventilation systems.

3. Fire Extinguishing System

Your boat is equipped with an automatic fire extinguisher system, located in the engine compartment. In the event of a fire, the heat sensitive automatic head in the engine compartment will release a fire-extinguishing vapor, totally flooding the area.

The dashboard contains an indicator light for the automatic fire extinguishing system. The light will be ON when the ignition is on and indicates that the system is ready. If the light goes out while the ignition is on, the system has discharged.

WHEN DISCHARGE OCCURS, IMMEDIATELY SHUT DOWN ALL ENGINES, POWERED VENTILATION, ELECTRICAL SYSTEMS AND EXTINGUISH ALL SMOKING MATERIALS. DO NOT IMMEDIATELY OPEN THE ENGINE COMPARTMENT! THIS FEEDS OXYGEN TO THE FIRE AND THE FIRE COULD RESTART.

Wait at least fifteen (15) minutes before opening the engine compartment. This permits the fire-extinguishing vapor to "soak" the compartment long enough for hot metals and fuels to cool. Have portable extinguishers at hand and ready to use in case the fire reignites. Do not breathe fumes or vapors caused by the fire.

A. Diesel Option

See *Section 7 • Accessories and Options*, Page 7.9 for details on the operation of the fire extinguishing system for diesel powered boats.

4. Carbon Monoxide

Symptoms of carbon monoxide poisoning are dizziness, ears ringing, headaches, nausea and unconsciousness. A poisoning victim's skin often turns cherry red. Because carbon monoxide gas (CO) is odorless, colorless and tasteless, it is unlikely to be noticed until a person is overcome.

⚠ DANGER

Fumes from engine, generators, and other equipment and appliances using burning fuel contain carbon monoxide.

Carbon Monoxide can kill you.

Open all doors, curtains, windows, and hatches to let fresh air circulate, when running engine, generator or burning any fuel when boat is anchored, moored or docked.

⚠ DANGER

Even in rainy cold weather ventilation must be maintained to avoid Carbon Monoxide poisoning. You will get wet and/or cold.

⚠ DANGER

Sleeping on boat requires an operating Carbon Monoxide detection system in each sleeping location.

Dangerous concentrations of carbon monoxide will be present if:

- the engine and/or generator exhaust systems leak;
- insufficient fresh air is circulating where people are present; and
- fumes move from the rear of the boat into the cockpit and cabin area.

Fig. 1.3.1 gives examples of boat operating conditions that can lead to high concentrations of carbon monoxide gas.

To minimize the danger of CO accumulation when the engine and/or generator are running, or using burning fuel applications:

- Be sure to have sufficient ventilation when using canvas or window-type side curtains when underway, anchored, moored or docked.
- If the convertible top is installed, operate with the forward hatch open and leave cabin door open.
- Operate all burning fuel appliances, such as charcoal, propane, LPG, CNG or alcohol cooking devices in areas where fresh air can circulate. Do not use such devices where there is no noticeable air movement, especially in the cabin, when anchored, moored or docked.
- Do not idle engine without moving boat for more than 15 minutes at a time.

EXAMPLES OF HOW HIGH LEVELS OF CARBON MONOXIDE MAY ACCUMULATE (FIG. 1.3.1)

BLOCKING HULL EXHAUSTS. OPERATING AT SLOW SPEED OR DEAD IN THE WATER.

ILLUSTRATION #A

OPERATING ENGINE AND/OR GENERATOR IN CONFINED SPACES.

ILLUSTRATION #D

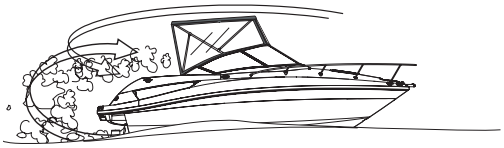

USING CANVAS CURTAINS.

ILLUSTRATION #B

OPERATING WITH THE BOW HIGH.

ILLUSTRATION #E

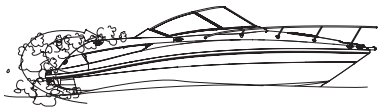

WINDS BLOWING EXHAUST TOWARD BOAT OCCUPANTS.

ILLUSTRATION #C

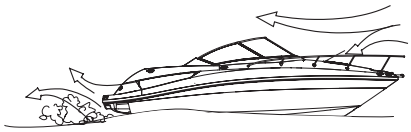

GOOD VENTILATION.

ILLUSTRATION #F

- Inspect the exhaust system regularly. (See Section 8, Required Inspection, Service and Maintenance.

If CO poisoning is suspected, have the victim breath fresh air deeply. If breathing stops, resuscitate. A victim often revives, then relapses because organs are damaged by lack of oxygen. Seek immediate medical attention.

A. Carbon Monoxide Monitor

Your boat has a carbon monoxide (CO) monitor mounted inside the boat . The CO monitor is an electronic instrument that detects CO. When there is a buildup of CO, the monitor will alert the occupants by a flashing DANGER light and alarm. The CO monitor is wired through a breaker on the Main Distribution Panel (MDP).

It is extremely important that you become totally familiar with your CO monitor and its functions.

Read and understand the CO monitor information and operating instructions located in your Owner's Manual Packet.

5. Lifesaving Equipment

Even strong swimmers can tire quickly in the water and drown due to exhaustion, hypothermia, or both. The buoyancy provided by a personal flotation device (PFD) will allow the person who has fallen overboard to remain afloat with far less effort and heat loss, extending survival time necessary to find and retrieve them.

Boat operators are required to carry one wearable personal flotation device (Type I, II, III or V) for every person on board. Boats must also have at least one throwable device (Type IV).

The law requires that PFD's must be readily accessible, if not worn. "Readily accessible" means removed from storage bags and unbuckled. But, children and nonswimmers must wear PFDs at all times when aboard. It is common sense to have everyone on board wearing PFDs. A throwable device must also be right at hand and ready to toss.

A. PFD Classifications

(Fig. 1.4.1)

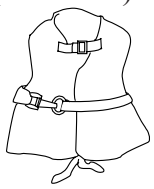

Off-Shore Life Jacket (Type I) – most buoyant, it is designed to turn an unconscious person face up; used in all types of waters where rescue may be slow, particularly in cold or rough conditions.

(Fig. 1.4.2)

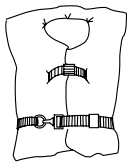

Near-Shore Life Vest (Type II)– "keyhole" vest with flotation-filled head and neck support is also designed to turn a person face up, but the turning action is not as pronounced; used in calm, inland waters or where quick rescue is likely.

(Fig. 1.4.3)

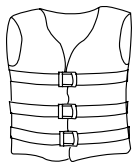

Flotation Aid (Type III) – vest is designed so conscious wearers can turn face up; often designed for comfort while engaged in sports such as skiing.

(Fig. 1.4.4)

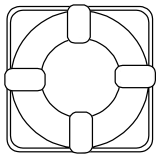

Throwable Devices (Type IV)– horseshoe buoys, ring buoys and buoyant cushions are designed to be grasped, not worn.

(Fig. 1.4.5)

Special-Use Devices (Type V)– sailboat harnesses, white-water vests, float coats, and hybrid vests which have minimum inherent buoyancy and an inflatable chamber.

Before purchasing PFDs, ensure that there is an attached tag indicating they are approved by the U.S. Coast Guard or by your national boating law enforcement agency.

Children and nonswimmers must wear PFDs at all times when aboard. All passengers and crew should wear them. A loose PFD is often useless in an emergency.

The operator is responsible for instructing everyone aboard on the location and use of PFDs.

Size PFDs for the wearer. Children require special attention in the use of PFDs.

Test PFD buoyancy at least once a year.

6. Additional Recommended Equipment for Safe Operation

In addition to legally mandated equipment, the following items are necessary for safe boating, especially if your boat is out of sight of land.

- First aid kit
- Visual distress signals for day and night use (required in some areas; consult local regulations)
- Charts of your intended cruising area
- Compass
- GPS or Loran position locating devices
- Marine VHF radio with weather channels
- Emergency position-indicating radio beacon (EPIRB)
- Manual bilge pump
- Moisture repellent
- Anchors, chain and line (The anchors must be properly sized for your boat. Ask your dealer or marine supply store for recommendations).
- Mooring lines
- Fenders
- Boat hook
- Waterproof flashlight(s)
- Extra batteries for flashlights and portable electronic devices
- High power spotlight, if you intend to boat at night
- Spare keys
- Instruction manuals for engine and accessories
- Lubricating oil
- Tool kit:
  - Assorted screwdrivers (Phillips and flat blade)
  - Pliers (regular, vise-grip, and tongue & groove)
  - Wrenches (box, open-end, allen, adjustable)
  - Socket set (metric or U.S. Standard as appropriate)
  - Electrical tape and duct tape
  - Hammer
  - Utility Knife
- Spare parts kit (spark plugs, fuses, hose clamps and ask your dealer to recommend other parts)
- Extra propeller

7. Impaired Operation

Drugs and/or alcohol will prevent you from operating your boat safely. This single factor is involved in more marine accidents and deaths than any other. The detrimental effects of alcohol and drugs are increased by the wind, waves and sun, quickly impairing your ability to react properly and promptly in an emergency.

⚠ WARNING

Drugs and/or alcohol impair the operator's ability to control the boat safely.

Death or serious injury can result from improper boat operation.

8. LOAD CAPACITY

A. UNITED STATES

Use common sense and sound judgement when placing equipment and/or passengers in your boat. The number of people on board must be reduced if you go out in poor weather and rough water.

- The number of seats does not indicate how many people a boat can carry in poor weather and rough water
- Above idle speed, all passengers must be seated on the seats provided.

The United States Coast Guard does not provide specific numbers for passenger capacity or cargo weight for recreational vessels larger than 20 feet (6.09 meters). For safety sake, use the following information provided for the international loading standards for maximum number of passengers plus cargo weight.

B. INTERNATIONAL

The certification plate (Fig. 1.6.1) located near the helm indicates maximum weight and number of persons your boat can handle under calm sea conditions. **Do not exceed the load capacities stated.** The number of people on board must be reduced if you go out in poor weather and rough water.

BUILDER'S PLATE (INTERNATIONAL)
(FIG. 1.6.1)

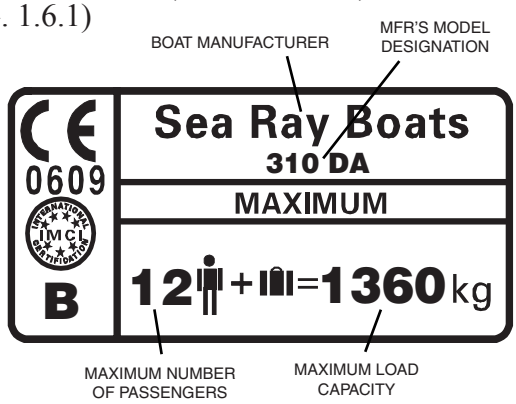

The information present on the certification plate does not relieve the operator from responsibility. Use common sense and sound judgement when placing equipment and/or passengers in your boat.

- Do not load to capacity in poor weather or rough water.
- The number of seats does not indicate how many people a boat can carry in poor weather and rough water.
- Above idle speed, all passengers must be seated on the seats provided.

⚠ WARNING

When engine is running, keep passengers away from areas not designed for riding, such as seat backs, bow, gunwales, transom platform, swim platform, front and rear decks and on sun pads.

Passengers can fall overboard if not seated properly on the seats provided.

⚠ DANGER

Never carry more weight or passengers than indicated on the certification plate, regardless of weather or water conditions.

The boat can capsize, swamp or sink.

9. POWER CAPACITY

Your boat's engine and accessories were selected to provide optimum performance and service. Installing a different engine or other accessories may cause unwanted handling characteristics. Should you choose to install a different engine or to add accessories that will affect the boat's running trim, have an experienced marine technician perform a safety inspection and handling test ***before*** operating your boat again. Certain modifications to your boat ***will*** result in cancellation of your warranty protection. ***Always*** check with your dealer ***before*** making any modifications to your boat.

10. PROPELLERS

Your Sea Ray® has been equipped with propellers which our tests have shown to be the best suited for general use with our engine under normal conditions and load. Do not change the pitch of your propellers without getting your dealer's recommendations first. If you change to a different propeller pitch, **under no circumstances use propellers which allow the engine to operate at higher than recommended RPM.** (Your engine manual specifies the maximum recommended RPM).

To maintain rated power, propellers should be free of nicks, excessive pitting and any distortions that alter them from their original design. Badly damaged propellers should be replaced, but those that are chipped, bent or merely out of shape can be reconditioned by your marine dealer.

It is advisable to carry an extra propeller aboard in case you damage the one in use.

11. STABILITY

Your boat was manufactured to specific stability and flotation standards for the capacity shown on the certification plate. Any increase from the recommended load capacities will put your boat in jeopardy of capsizing, swamping and/or sinking.

IN ADDITION:

- Stability may be substantially reduced if equipment is added above the deck.
- Stability is substantially reduced by loose fluids or weight within the hull. Keep bilge area as dry as possible, and close all openings, hatches and windows in rough weather.

⚠ WARNING

Distribute passengers and gear as uniformly as possible from front to rear and left to right.

The manufacturer's load rating is the maximum allowed under calm conditions.

Reduce boat loading if weather, water or other conditions are adverse.

12. MAINTAIN CONTROL

On the water there are no marked traffic lanes, no traffic signs or lights, and boats have no turn signals. The boat operator must keep his or her attention focused not only on what's ahead but what's on the left, right and behind the boat.

The operator must always be alert to approaching boats (from the rear, right and left sides, as well as those ahead). There can be people in the water, partially submerged debris, and other navigational hazards such as rocks, sand bars, dangerous currents, to name a few.

Your passengers are relying on you to operate and maneuver the boat safely so that they are not in danger of going overboard. If you turn too quickly, increase or decrease speed abruptly, your passengers are at risk of being thrown overboard or thrown about the boat.

⚠ WARNING

Death or serious injury can result if you fail to observe these safety rules:

- **Anyone who controls the boat must have taken a boating safety course and have trained in the proper operation of the boat.**
- **Always operate the boat at speeds that will not put people or property in danger.**
- **Be constantly aware of conditions in all directions when underway and before turning.**
- **Reduce speed, use a lookout to identify possible hazards or difficulties, and turn on navigation lights when:**
  - **- visibility is impaired;**
  - **- in rough water; or**
  - **- in congested waterways.**
- **Watch your wake. It can capsize a small boat or damage moored boats or other property. You are responsible for damage caused by your wake.**

When visibility becomes impaired because of weather, time of day or high bow angle you must slow down so that you have sufficient time to react if an emergency occurs. Nearby boats face similar risks in avoiding a collision with you.

A. General Considerations

- Know how your boat handles under different conditions. Recognize your limitations and the boat's limitations. Modify speed in keeping with weather, sea and traffic conditions.
- Instruct passengers on location and use of safety equipment and procedures.
- Instruct passengers on the fundamentals of operating your boat in case you are unable to do so.
- You are responsible for passenger's actions. If they place themselves or the boat in danger, immediately correct them.

13. Weather

There are four international design categories of boats based upon their ability to withstand wind and sea or water conditions:

A. Ocean
Wind speed: above 40 knots (46 mph)
Wave height: above 4 meters (13 feet)
Boat may be used for extended ocean voyages.

B. Offshore
Maximum wind speed: 40 knots (46 mph)
Maximum wave height: 4 meters (13 feet)
Boat can be used offshore, but not for extended ocean voyages.

C. Inshore
Maximum wind speed: 27 knots (31 mph)
Maximum wave height: 2 meters (6.5 feet)
Boat use is limited to coastal waters, large bays, estuaries, lakes and rivers.

D. Sheltered waters
Maximum wind speed: 15 knots (18 mph)
Maximum wave height: 0.5 meters (1.5 feet)
Boat use is limited to small lakes, rivers and canals.

⚠ DANGER

DO NOT ATTEMPT TO BOAT IN SEVERE WEATHER CONDITIONS

DEATH OR SERIOUS INJURY CAN OCCUR

GET TO SHORE BEFORE THE WEATHER TURNS BAD

Your 310 Sundancer® is Design Category B.

The wind speed and wave height specified as the upper limit for your category of boat does **not** mean that you or your passengers can survive if your boat is exposed to these conditions. It is only the most experienced operators and crew that may be able to operate a boat safely under these conditions. You must always be aware of weather conditions and head for port or protected waters in sufficient time to avoid being caught in high winds and rough water. **Do not take chances!**

Getting caught in severe weather is hazardous. Bad weather and/or rough sea or water conditions can cause an unsafe situation. Consult local weather information, or listen to the NOAA weather reports for the latest weather conditions or any impending deterioration of the weather before setting out and while underway. Following are a few basic weather-related rules:

- Check the weather forecast and the water conditions before leaving and while underway.
- A sudden change in wind direction or speed or an increase in wave height indicates deteriorating weather.
- Have everyone wear a personal flotation device.
- If a storm approaches, immediately seek a safe harbor.
- If a storm hits, have everyone sit in the cabin or

on the cockpit deck in the boat. Head the bow into the wind with enough power to maintain slow headway.

- If you encounter fog, determine your position, set a safe course, slow down and alert other boats of your presence with a sound signal.
- If a lightning storm approaches, the safest action is to dock and disembark. If you cannot return to shore, have passengers go **inside** the cabin and remain there until the storm passes.
- Lightning seeks a ground when it strikes. The best protection is a properly grounded lightning rod placed high enough over the deck to provide a protective umbrella over the hull. Depending upon the likelihood of your being in a lightning storm, consult your dealer for installation of a lightning rod. Stay clear of the lightning rod, all attached wiring and all metal parts of the boat.
- Stay out of the water during a lightning storm. If caught swimming during a storm, get back into the boat and remain there until the storm passes.

14. Chart Your Course

To avoid boating in unsafe areas where there are underwater obstructions, shallow water, unnavigable conditions such as dangerous currents, and others, you must chart a course. This means having and using the National Oceanic and Atmospheric Administration (NOAA) charts for coastal waters, observing and understanding all navigational aids, using the knowledge and guidance of experienced boaters, and being aware of the tide times where appropriate.

⚠ WARNING

Hitting an object in or under the water or boating in dangerous currents can cause serious injury or death to boat occupants.

You must know where the hazards are and avoid them.

In uncharted waters, boat very slowly and post a lookout.

If you are in an unfamiliar area without knowledge of the hazards, proceed very slowly and have someone watch for hazards.

Let others know where you are going. A float plan describes your intended cruising course and itinerary, boat description, and your expected time and date of return. Give the float plan to a friend or relative, so they can give the information to a national boat agency, like the U.S. Coast Guard, in the event you fail to return.

⚠ WARNING

Shut engine off if an object is struck or if you run aground.

Check for hull leaks and drive line damage, before restarting engines.

Use hand pump if bilge pumps don't remove water.

Boat very slowly, if you must proceed with a damaged drive line.

15. Water Sports

⚠ WARNING

Your boat can kill or injure persons in the water.

Always stay away from areas designated for swimming or diving. Unless you are towing a skier, stay away from water ski areas. Recognize markers used for such areas.

When engine is running, close and lock transom door and do not permit anyone to use boarding ladder or swim platform.

A. Swimming

- Do not permit anyone to swim from a moving boat, or a boat with an engine running.
- Many localities prohibit swimming from boats except in designated areas.
- Make sure boat's engines are turned off before allowing people to swim anywhere near your boat. Shut the engine OFF and remove the key from the ignition switch so that no one can

accidentally start the engine while swimmers are nearby.

- Turn off engines when taking swimmers or skiers aboard or when they are entering the water. Never permit use of the transom or swim platform while engines are running.
- Slow down and look for swimmers or skiers when cruising in an area where there might be persons in the water.

B. SKIING

It is advised that you become familiar with water skiing safety and hand signals as you will most likely, on occasion, find yourself in the vicinity of or engaging in water skiing activity.

⚠ WARNING

Skiers must wear an approved PFD.

- Anyone who water skis must know how to swim.
- Never drive the boat directly behind a water skier. At 22 knots (25 m.p.h.), it takes only 5 seconds to overtake a fallen skier who was 60 meters (200 feet) in front.
- Keep a downed skier in sight and on the operator's side of the boat when approaching the skier. Never back up to anyone in the water.
- Learn the signals to communicate with a skier. The skier is to control the boat through hand signals (Fig. 1.10.1).

  Turn – Arm raised, circle with index finger extended.

  Skier in Water – Extend one ski vertically out of water.

  Back to Dock – Pat top of head.

  Cut Motor – Draw finger across throat.

  Slow Down – Thumb pointed down or palm down, move hand up and down.

  Faster – Thumb pointed up or palm up, move hand up and down.

  OK – Raise arm and form a circle with thumb and index finger.

  Stop – Raise arm with palm vertical and facing forward.

  Turn Right – Extend arm out from body to the right.

  Turn Left – Extend arm out from body to the left.

  OK After a Fall – Clasp hands together overhead.

SKIING SIGNALS
(FIG. 1.10.1)

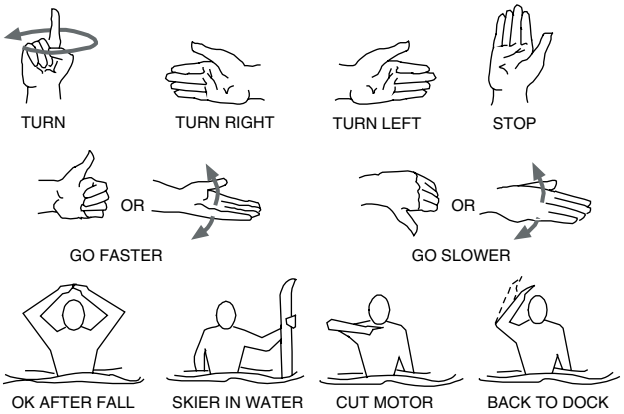

- If the skier suddenly releases the tow rope, it can backlash into cockpit. Spotters who are watching the skier must be aware of this fact and be prepared to deflect the rope by hand to avoid injury.

C. DIVING

- Recognize and respect diving flags (Fig. 1.10.2). Keep at least 30 meters (100 feet) away.

DIVERS FLAGS
(FIG. 1.10.2)

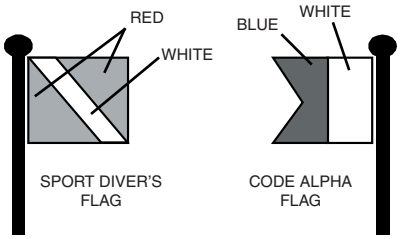

Sport Diver's Flag – Red flag with diagonal white stripe marks a diver in the water.

Code Alpha Flag – Blue and white pennant designates boat being used in dive operations.

IN GENERAL

When engaged in water sports, be safe and courteous to others sharing the water:

- Be considerate to fishermen.
- Do not water ski in congested areas.
- Keep the boat and skier away from navigation markers.
- Stay well clear of other boats and skiers.

16. EMERGENCY SITUATIONS

Prevention is the safest approach. We hope that you are never involved in an emergency situation.

ASSISTING OTHER BOATERS

All boaters have a legal obligation to help other boaters who are in distress, as long as rendering assistance does not endanger you, your passengers or your boat.

If you are involved in an emergency situation, it is imperative that you know how to react, in order to protect the lives in your care.

A. MEDICAL EMERGENCY

You may be far from professional medical help when you are boating. At least two people on board your boat should be CPR certified, and should have taken a first aid course. Equip your boat with a first aid kit.

B. WATER RESCUE

A person who has fallen overboard will die from hypothermia in water temperatures below 70°F if not rescued quickly. Water rescue consists of three steps: returning to the victim, making contact with the victim, and getting the victim back on board.

RETURNING TO THE VICTIM

- Immediately make everyone aware of the incident and keep the victim in sight.
- Slow the boat and keep pointing toward the person overboard. At night, direct the best available light source at the person.
- Throw a life preserver, even if the person is wearing a PFD. It will serve as another marker.

MAKING CONTACT

- Stop or slow the boat and circle toward the victim.
- Try to approach heading into the wind or into the waves.
- Keep the victim constantly in sight.
- When almost alongside, stop the engine in gear to prevent propeller "windmilling."

GETTING BACK ABOARD

- Try to reach the victim with a pole, or by throwing a life preserver. Do not swim to rescue the victim, except as a last resort.
- Assist the person in boarding the boat. The person should normally be brought in over the stern.
- If the person is injured or cannot get into the boat, a rescuer should put on a PFD with a safety line attached to the boat and enter the water to assist the victim.
- Handle the victim with care. Spinal injuries may have occurred.

C. FIRE

Fire is a serious boating hazard. Boats will burn quickly. Do not remain on board and fight a fire for more than a few minutes. If the fire cannot be extinguished within a few minutes, abandon the boat.

Have fire extinguishers handy. A small fire can be extinguished quickly with the right size and type of fire extinguisher.

- Extinguish smoking materials, shut off blowers, stoves, engines and generators.
- Throw burning materials overboard, if possible.
- If the fire is accessible, empty the contents of fire extinguishers at the base of the fire.
- If the fire is in the engine compartment and you have an automatic extinguisher for the engine, wait 15 minutes before opening the compartment. Have a portable extinguisher ready in case the fire flares up.
- Signal for help.
- Grab distress signals and survival gear. Put on PFDs. Prepare to abandon ship.

D. FLOODING, SWAMPING AND CAPSIZING

In the event of flooding, swamping or capsizing:

- Try to shut off engines, generators and blowers, before leaving the boat.
- Have everyone put on Personal Flotation Devices (PFDs).
- Account for all who were on board.
- If the boat is floating stay with the boat. Hang on, or climb on the boat and signal for help.
- Only as a last resort should you attempt to swim to shore - it is further away than it looks and you can tire and drown.

E. COLLISIONS AND LEAKING

In the event of collision and leaking:

- Slow down or stop to reduce water intake, unless maintaining speed will keep the hole above water.
- Switch on bilge pumps.
- If equipped, operate the manual bilge pump if the powered bilge pumps can't handle the water flow.
- Account for everyone on board and check for injuries.
- Have everyone put on PFDs.
- Stay with the boat.
- Signal for help.
- If a leak patch is attempted, it should be done from the outside.
- In the event of a collision, you are required to file an accident report. Contact a state enforcement agency or the nearest Coast Guard office. If you are boating outside of U.S. waters, consult the nation you are visiting for accident reporting requirements.

F. GROUNDING

In the event of running aground:

- Check for leaks. If water is coming in, stop the intake of water before attempting to get the boat free.
- Inspect for damage to the hull, propulsion and steering systems.
- Determine if the tide, wind and current will drive the boat harder aground or will help to free it.
- Determine the water depth all around the boat, and the type of bottom (sand, mud, rocks, etc.). If it can be done without exposing persons to risk of injury, the boat should be moved away from hard obstructions and toward open water with soft ground.

- Do not attempt to have your boat towed by other than a trained and competent service, such as the Coast Guard or a salvage company. Recreational craft are not designed to tow other recreational craft.

G. Propulsion, Control or Steering Failure

If the drive train fails, or controls or steering do not respond properly at all:

- Shut off engine.
- Put out the anchor to prevent drifting.
- Determine whether or not you can repair the problem yourself. See the proper manuals for assistance in troubleshooting the engine, steering and engine controls.
- If you are not sure you can fix the problem, or if conditions are adverse, signal for help.

17. Safety Hot Lines

The safety information in the preceding pages gives only the general areas of concern for boating safety. It is not intended to be, nor can it be, exhaustive. You must take a boating safety course, and get hands-on instruction in the proper and safe operation of your boat from experienced persons before cruising.

The U.S. Coast Guard offers many pamphlets on safety and other information not covered in this book. Contact your local Coast Guard unit or call the toll-free safety hot lines below for information.

- U.S. Coast Guard 1-800-368-5647
- Canadian Coast Guard 1-800-267-6687

In other countries, ask your marine dealer for information on how to contact the national boating law enforcement agency.

18. International Requirements

This vessel and its systems have been constructed in accordance with standards and specifications in effect at the time of manufacture as published by the various regulatory authorities listed below.

1. Ministere De La Mer - France
2. Registro Italiano Navale - Italy
3. Det Norske Veritas - Norway
4. Securite des Nauires - Canada
5. J.C.I. (Japan Craft Inspection) - Japan
6. N.K.K. (Nippon Kaiji Kyokai) - Japan
7. B.S.I. (British Standards Institute) - England
8. Ministerio Obras Publicas Y Transportes - Spain
9. EC Recreational Craft Directive - European Community.

Further information concerning these requirements may be obtained from Sea Ray® Customer Service: 1-800-SRBOATS.

19. ENVIRONMENTAL CONSIDERATIONS

The following warning is offered for boats sold in the State of California in accordance with California Health & Safety Code §§ 25249.5-.13:

⚠ WARNING

A wide variety of components used on this vessel contain or emit chemicals known to the State of California to cause cancer and birth defects and other reproductive harm.

EXAMPLES INCLUDE:

- **Engine and generator exhaust**
- **Engine and generator fuel, and other liquids such as coolants and oil, especially used motor oil**
- **Cooking fuels**
- **Cleaners, paints, and substances used for vessel repair**
- **Waste materials that result from wear of vessel components**
- **Lead from battery terminals and from other sources such as ballast or fishing sinkers**

TO AVOID HARM:

- **Keep away from engine, generator, and cooking fuel exhaust fumes.**
- **Wash areas thoroughly with soap and water after handling the substances above.**

A. FUEL AND OIL SPILLAGE

Regulations prohibit discharging fuel or oily waste in navigable waters. Discharge is defined as any action which causes a film, sheen or discoloration on the water surface, or causes a sludge or emulsion beneath the water surface. A common violation is bilge discharge. Use rags or sponges to soak up fuel or oily waste, then dispose of them properly ashore. If there is much fuel or oil in the bilge, contact a knowledgeable marine service to remove it. Never pump contaminated bilge discharge overboard. Help protect your waters.

Fill tank(s) less than rated capacity. Allow for fuel expansion.

B. WASTE DISPOSAL

- Many areas prohibit overboard sewer discharge. Close and disable flow-through waste systems to prevent discharge in such areas.
- Bag all refuse until it can be disposed of ashore. Regulations prohibit disposal of plastic anywhere in the marine environment and restrict other garbage disposal within specified distances from shore.

NOTICE

- **There is a possibility of being fined for having an operable direct overboard discharge of waste in some waters. Removing seacock handle, in closed position, or other means must be used to avoid fine.**
- **It is illegal for any vessel to dump plastic trash anywhere in the ocean or navigable waters of the United States.**

⚠ CAUTION

FOR BOATS WITH VACUFLUSH® HEADS ONLY

Do not place facial tissues, paper towels or sanitary napkins in head. Such material can damage the waste disposal system and the environment.

C. EXCESSIVE NOISE

Many areas regulate noise limits. Even if there are no laws, courtesy demands that boats operate quietly.

⚠ WARNING

SPEED HAZARD - Watch your wake. It might capsize a small craft. You are responsible for damage caused by your wake.

D. WAKE / WASH

Power boat wakes can endanger people and vessels. Each power boat operator is responsible for injury or damage caused by the boat's wake. Be especially careful in confined areas such as channels or marinas. Observe "no wake" warnings.

⚠ CAUTION

Reduce speed in congested waterway.

Be alert for No Wake markers.

20. NAUTICAL TERMS

Abeam – object 90 degrees to center line on either side of boat.

Abaft – a point on a boat that is aft of another.

Aft – toward the rear or stern of the boat.

Beam – the width of a boat.

Bow – the fore part of a boat.

Bow Eye – bolt with looped head mounted on extreme forward part of bow.

Bulkhead – vertical partition in a boat.

Chine – meeting juncture of side and bottom of boat.

Chock – deck fitting, used as guides for mooring or anchor lines. Also, a wedge to stop wheels from rolling.

Cleat – deck fitting with arms or horns on which lines may be made fast.

Cockpit – an open space from which a boat is operated.

Deck – upper structure which covers the hull between gunwales.

Draft – depth of water required to float boat and its propulsion system.

Fathom – six feet.

Fenders – rope or plastic pieces hung over the side to protect the hull from chafing.

Freeboard – height of exposed hull from water line to deck.

Ground tackle – general term referring to anchors, anchor lines, etc.

Gunwale (pronounced gun'l) – meeting juncture of hull and deck.

Hatch – an opening in deck to provide access below.

Head – toilet or toilet area in a boat.

Headroom – vertical distance between the deck and cabin or canopy top.

Helm – steering console.

Hull – the basic part of a boat that provides buoyancy to float the weight of the craft and its load.

Keel – the major longitudinal member of a hull; the lowest external portion of a boat.

Knot – unit of speed in nautical miles per hour.

Lee – the side that is sheltered from the wind.

PFD – Personal Flotation Device; life preserver.

Port – term designating left side of the boat.

Rudder – movable fixture at the stern used for steering.

Scupper – hole permitting water to drain overboard from deck or cockpit.

Sheer – curve or sweep of the deck as viewed from the side.

Snub – to check or tighten a line suddenly.

Starboard – term designating right side of the boat

Stern – the aft end of a boat.

Stern drive – outboard unit of an inboard/outboard (I/O) engine installation.

Stringer – longitudinal members fastened inside the hull for additional structural strength.

Transom – transverse part of stern.

Wake – disturbed water that a boat leaves behind as a result of forward motion.

Windward – toward the direction from which the wind is blowing.

21. KEY TO SYMBOLS ON CONTROLS AND PRINTS

These symbols may be found on your controls and gauges and/or used in this owner's manual. This page is to help you understand what the symbols mean.

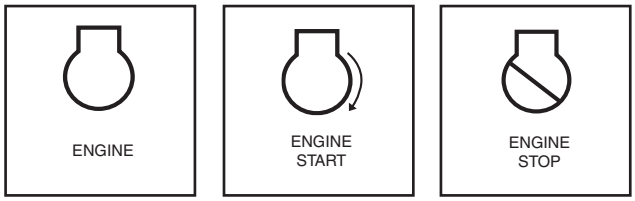

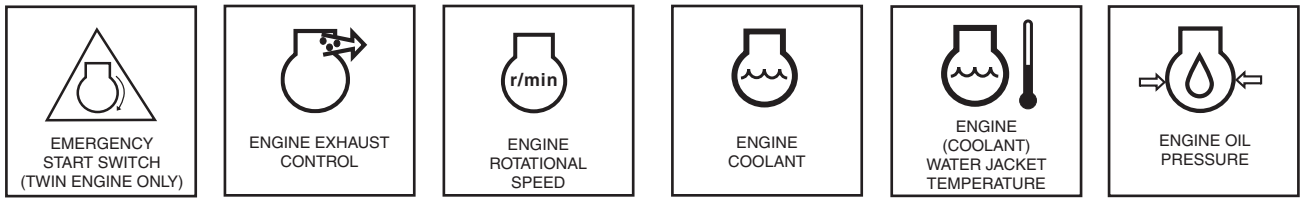

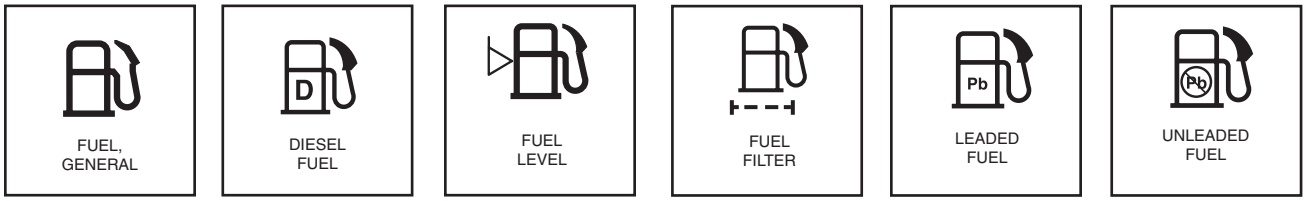

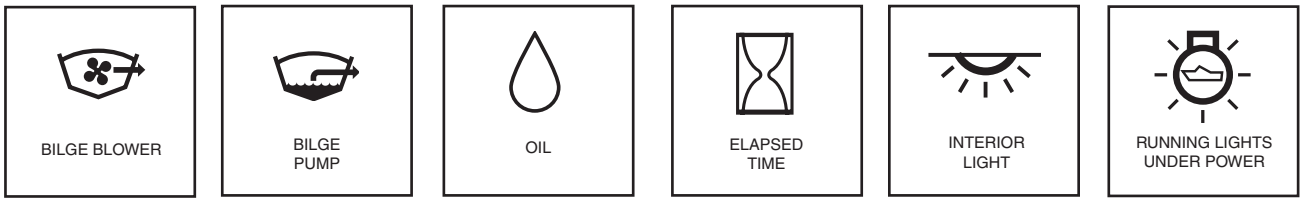

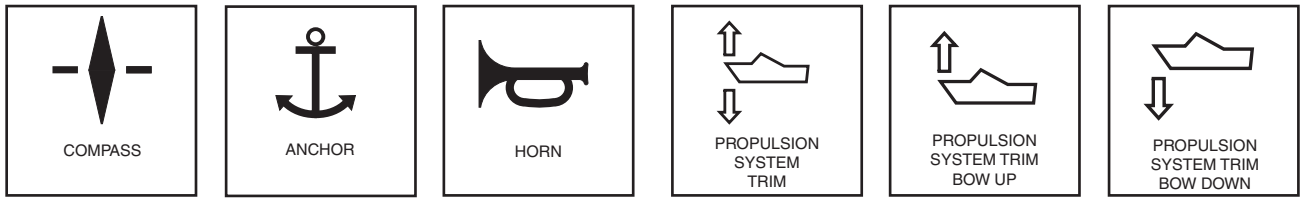

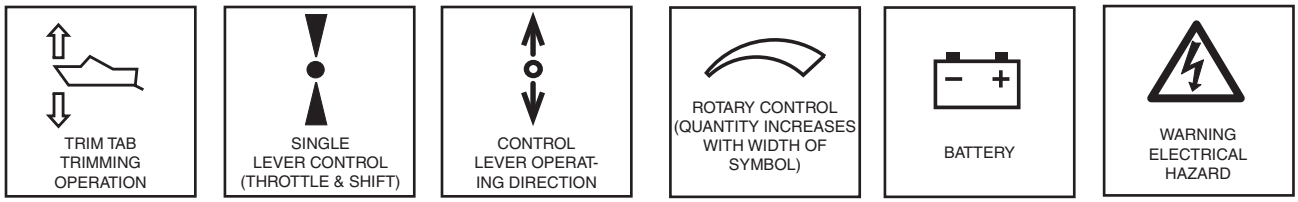

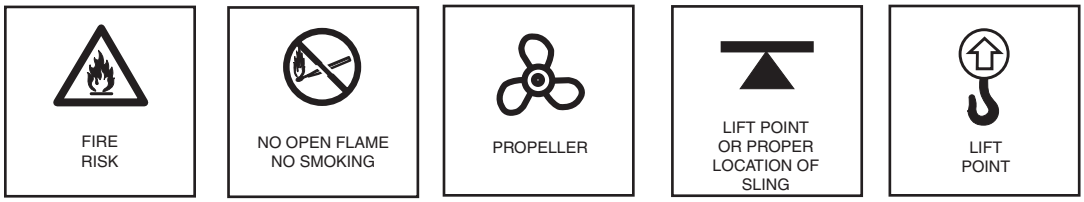

22. Warning Label Locations

Warning Label Locations
(Fig. 1.17.1)

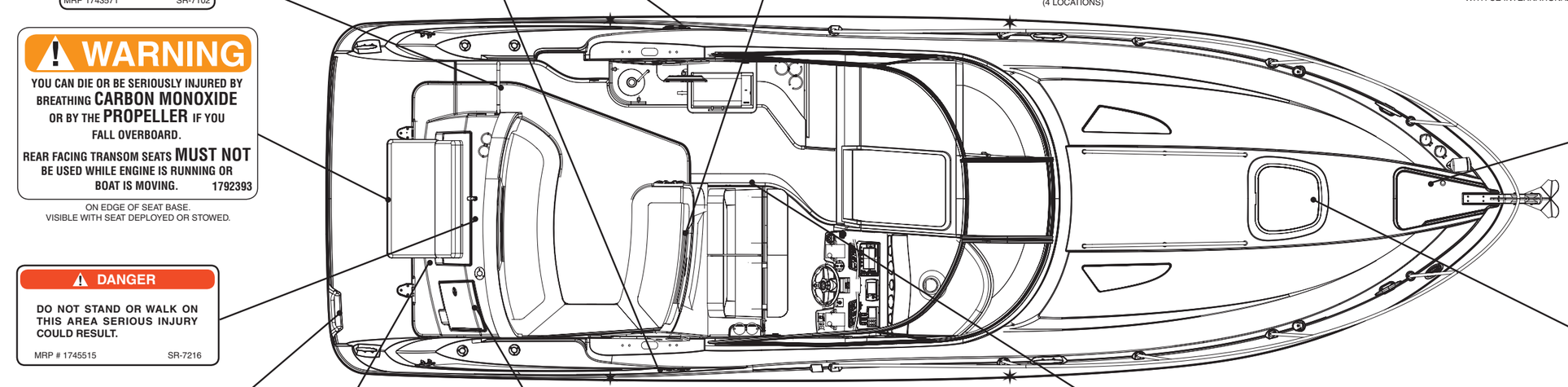

DANGER
NO SMOKING
GASOLINE VAPORS ARE EXPLOSIVE

NOTICE
GASOLINE RECOMMENDATION
Minimum octane rating of 87 AKI.
Refer to the engine owner's manual for additional information.
MRP 1745157 SR-7119A

NOTICE
CHECK BATTERY CELL FLUID LEVEL APPROXIMATELY EVERY 4 WEEKS, AND MORE OFTEN IN SUMMER AND HOT ZONES.
MRP # 1746895 SR-7139

NOTICE
THIS BOAT IS EQUIPPED WITH AN OPTIONAL DIRECT OVERBOARD DISCHARGE VALVE. DISCHARGING OF SEWAGE DIRECTLY OVERBOARD IS FOR USE WHERE APPROVED ONLY
MRP 1745156 SR-7118

WARNING
LEAKING FUEL IS A FIRE AND EXPLOSION HAZARD, INSPECT SYSTEM REGULARLY. EXAMINE FUEL TANKS FOR LEAKS OR CORROSION AT LEAST ANNUALLY.
MRP 1745513 SR-7151

CAUTION
PRIOR TO TOWING VESSEL:
- LOCK PROPELLER SHAFT(S) TO PREVENT DAMAGE TO SHAFT SEAL AND TRANSMISSION BEARINGS.
- CLOSE SEACOCKS ON NON-OPERATING ENGINES TO PREVENT SEA WATER INGESTION.

MRP 1751885 SR-7203

DANGER
STAY CLEAR OF MOVING PARTS WHILE ENGINE IS RUNNING.
MRP 1745512 SR-7149

DISCHARGE OF OIL PROHIBITED
THE FEDERAL WATER POLLUTION CONTROL ACT PROHIBITS THE DISCHARGE OF OIL OR OILY WASTE INTO OR UPON THE NAVIGABLE WATERS OF THE UNITED STATES OR THE WATERS OF THE CONTIGUOUS ZONE IF SUCH DISCHARGE CAUSES A FILM OR SHEEN UPON OR A DISCOLORATION OF THE SURFACE OF THE WATER OR CAUSES A SLUDGE OR EMULSION BENEATH THE SURFACE OF THE WATER.
VIOLATORS ARE SUBJECT TO A PENALTY OF $5,000.
MRP # 1744737 SR-744

ON UNDERSIDE OF ENGINE HATCH

PREVENT THE DISCHARGE OF POLLUTANTS
DISCHARGE OF OIL OR OILY WASTE INTO NAVIGABLE WATERS IS PROHIBITED OF SUCH A DISCHARGE CAUSES A FILM, SHEEN OR A DISCOLORATION OF THE SURFACE, OR CAUSES A SLUDGE OR EMULSION BENEATH THE SURFACE OF THE WATER. VIOLATORS ARE SUBJECT TO PENALTIES.
MRP # 1745514 SR-7166

REPLACES SR-744 ON BOATS WITH CE INTERNATIONAL OPTION

SLING
MRP # 221861 SR-27
(4 LOCATIONS)

DANGER
TRANSOM DOOR MUST BE CLOSED AND SECURE WHEN ENGINE IS RUNNING
MRP 1743571 SR-7102

WARNING
YOU CAN DIE OR BE SERIOUSLY INJURED BY BREATHING CARBON MONOXIDE OR BY THE PROPELLER IF YOU FALL OVERBOARD.
REAR FACING TRANSOM SEATS MUST NOT BE USED WHILE ENGINE IS RUNNING OR BOAT IS MOVING. 1792393

ON EDGE OF SEAT BASE.
VISIBLE WITH SEAT DEPLOYED OR STOWED.

DANGER
STAY CLEAR OF MOVING PARTS
MRP # 1746896 SR-7162

LOCATED UNDER ANCHOR HATCH

DANGER
DO NOT STAND OR WALK ON THIS AREA SERIOUS INJURY COULD RESULT.
MRP # 1745515 SR-7216

DANGER
DO NOT STAND OR WALK ON THIS AREA SERIOUS INJURY COULD RESULT.
MRP # 1745515 SR-7216

DANGER
TO AVOID RISK OF SERIOUS INJURY OR DEATH SHUT OFF ENGINE WHEN NEAR SWIMMERS OR PRIOR TO USING SWIM PLATFORM AND BOARDING LADDER.
MRP 1745519 SR-7214

WARNING
- DO NOT LEAVE BOAT UNATTENDED WITH THE DOCKSIDE WATER HOSE CONNECTED.
- DOCKSIDE WATER SHOULD BE CONNECTED DURING PERIODS OF HEAVY WATER USE ONLY.

MRP 1745162 SR-7124

INSIDE COMPARTMENT

CAUTION
IF SWITCH IS TURNED OFF WHILE ENGINE IS RUNNING ALTERNATOR WILL BE DAMAGED.
MRP # 1746901 SR-7167

ON DC BREAKER PANEL AT BATTERY SWITCH

DANGER
Carbon monoxide (CO) can cause brain damage or death.
Engine and generator exhaust contains odorless and colorless carbon monoxide gas.
Carbon monoxide will be around the back of the boat when engines or generators are running.
Move to fresh air, if you feel nausea, headache, dizziness, or drowsiness.
NW-206-05

MRP # 1811367

FUEL SHUT-OFF VALVE ENCLOSED
MRP 1744735 SR-741
DIESEL OPTION ONLY

DANGER
UNPLUG SHORE POWER AND TURN OFF GENERATOR *BEFORE* REMOVING COVER
MRP 1743616 SR-7154

THROUGHOUT THE BILGE
ON ALL AC JUNCTION BOXES

WARNING LABEL LOCATIONS (FIG. 1.18.1)

⚠ WARNING

Carbon monoxide (CO) can cause brain damage or death.

Engine and generator exhaust contains odorless and colorless carbon monoxide gas.

Signs of carbon monoxide poisoning include nausea, headache, dizziness, drowsiness, and lack of consciousness.

Get fresh air if anyone shows signs of carbon monoxide poisoning.

See Owner's Manual for information regarding carbon monoxide poisoning.

NW-204-05

MRP # 1811368

⚠ DANGER ⚠

AVOID COLLISIONS-

- Maintain Look-out as required by the "Rules of the Road".
- Visibility can be limited by high boat trim angles. persons, gear, weather and light conditions.
- At all times proceed at a Safe Speed so that you can take proper and effective action to avoid hazardous conditions.

Such issues are considered under the control of the operator!

CARBON MONOXIDE CAN BE FATAL-

In all gasoline powered boats, engine and generator exhaust systems produce colorless and odorless carbon monoxide gas ("CO"). Direct prolonged exposure can result in CO poisoning which may be harmful or fatal. To prevent excess exposure and reduce the possibility of accumulations of CO in the cabin and cockpit of the boat, the operator should insure adequate ventilation in each the cabin and cockpit areas, through utilization of cabin hatches, cabin doors, cabin windows, cockpit windshield windows and side windshield vents to increase air movement through the cabin and cockpit areas. The following conditions tend to increase the accumulation of CO in and about the boat and require the operator's particular attention:

1. Operation at slow speeds or dead in the water.
2. Operation with a high bow angle attitude.
3. The utilization of canvas tops, side curtains and back curtains.
4. Contributing climatic conditions, such as a head wind.
5. Operation of engines and/or generator in confined spaces or at dockside.
6. Any blockage of hull exhaust outlets.

Indications of excessive exposure to CO concentrations may include nausea, dizziness and drowsiness.

DO NOT USE-Sun Pads, Boarding Ladder or Swim Platform and Transom Door should be closed when engine is running.

MRP 1749696 SR-7193

GASOLINE BOATS ONLY

⚠ DANGER

AVOID COLLISIONS

.Maintain look-out as required by the "Rules of the Road".
.Visibility can be limited by high boat trim angles. persons, gear, weather and light conditions.
.At all times proceed at a Safe Speed so that you can take proper and effective action to avoid hazardous conditions.

Such issues are considered under the control of the operator!

AVOID RISK OF INJURY OR DEATH, SHUT OFF ENGINE PRIOR TO USING SUNPADS, SWIM PLATFORM OR BOARDING LADDER.

MRP 1744804 SR-7187

REPLACES SR-7193 ON DIESEL BOATS

⚠ WARNING

VISIBILITY FROM THIS HELM STATION IS LIMITED AVOID COLLISIONS-MAINTAIN LOOKOUT AS REQUIRED IN 'RULES OF THE ROAD' BY US COAST GUARD

MRP # 1752856 SR-7153

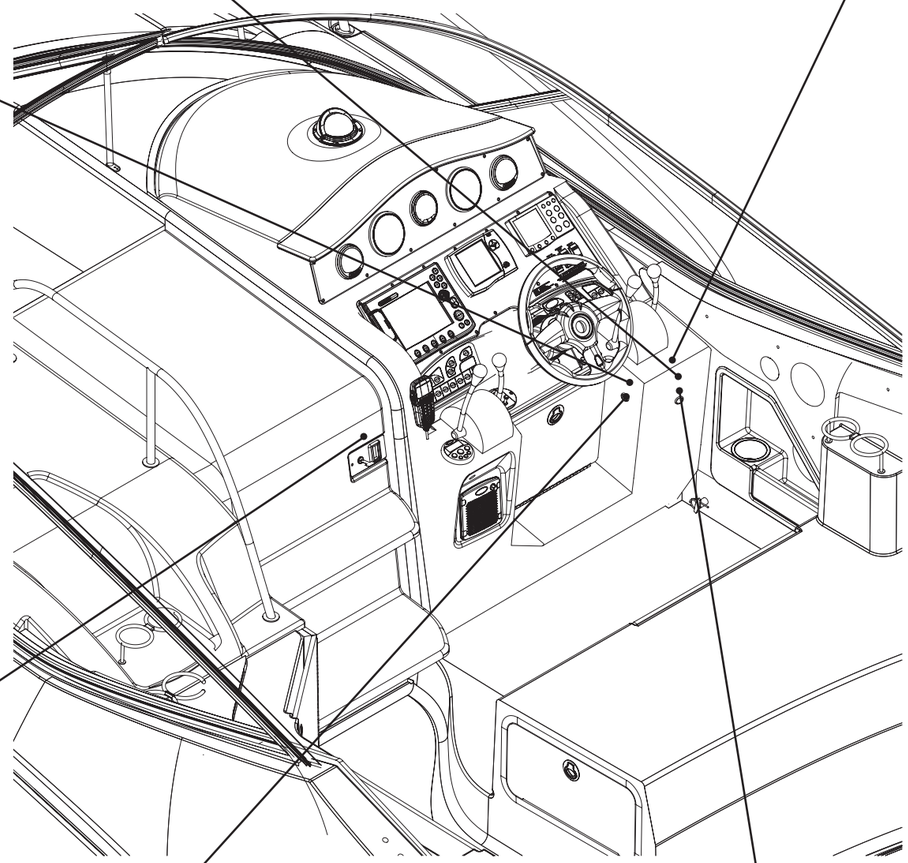

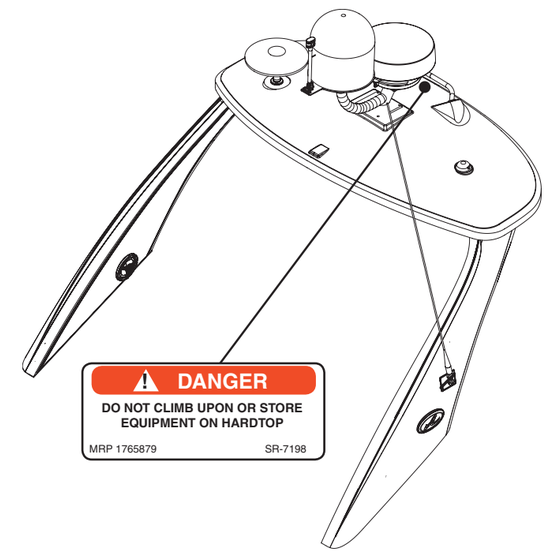

⚠ DANGER

DO NOT CLIMB UPON OR STORE EQUIPMENT ON HARDTOP

MRP 1765879 SR-7198

⚠ DANGER

DOOR MUST BE SECURED WHILE VESSEL IS UNDERWAY

MRP 1743507 SR-7313

⚠ WARNING

RUNNING BOAT WITH DOOR OPEN COULD INDUCE EXHAUST FUMES INTO CABIN. SEE OWNER'S MANUAL FOR INSTRUCTIONS CONCERNING CARBON MONOXIDE.

MRP # 1743548 SR-7285

ON INSIDE OF CABIN DOOR

NMMA CERTIFIED

YACHT CERTIFICATION

DESIGN COMPLIANCE WITH NMMA REQUIREMENTS IN EFFECT ON THE DATE OF CERTIFICATION IS VERIFIED. MANUFACTURER RESPONSIBLE FOR PRODUCTION CONTROL.

NATIONAL MARINE MANUFACTURERS ASSOCIATION

THIS BOAT COMPLIES WITH U.S. COAST GUARD SAFETY STANDARDS IN EFFECT ON THE DATE OF CERTIFICATION.

SEA RAY BOATS, INC. MERRITT ISLAND, FL

NMMA CERTIFICATION TAG

CE 0609 IMCI B

Sea Ray Boats
310 DA
MAXIMUM
12 + = 1360 kg

THIS TAG INSTALLED WHEN BOAT IS ORDERED WITH CE INTERNATIONAL OPTION

12VDC-15A MAX

MRP # 1744738 SR-747

NMMA NW501-04

⚠ WARNING

A wide variety of components used on this vessel contain or emit chemicals known to the State of California to cause cancer and birth defects and other reproductive harm.

EXAMPLES INCLUDE:
- Engine and generator exhaust
- Engine and generator fuel, and other liquids such as coolants and oil, especially used motor oil.
- Cooking fuels.
- Cleaners, paints, and substances used for vessel repair.
- Waste materials that result from wear of vessel components.
- Lead from battery terminals and from other sources such as ballast or fishing sinkers.

TO AVOID HARM:
- Keep away from engine, generator, and cooking fuel exhaust fumes.
- Wash areas thoroughly with soap and water after handling the substances above.

California Health & Safety Code §§ 25249.5-.13

MRP 1798084
CALIFORNIA RESIDENTS ONLY
THE ABOVE WARNING IS ATTACHED TO THE STEERING WHEEL PRIOR TO DELIVERY OF ANY BOATS SOLD IN THE STATE OF CALIFORNIA IN ACCORDANCE WITH CALIFORNIA HEALTH & SAFETY CODE §§ 25249.5-.13:

Warning Label Locations
(Fig. 1.19.1)

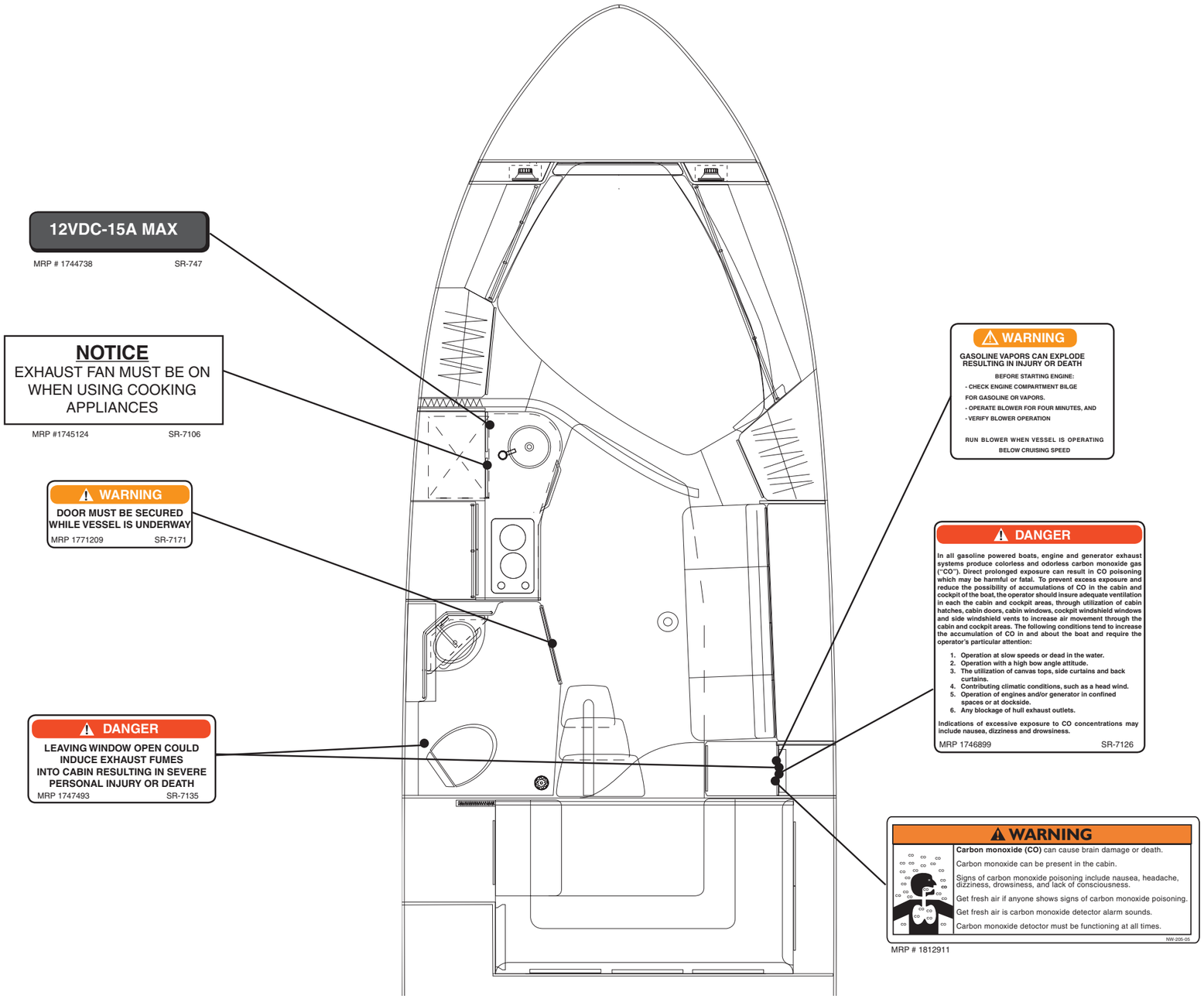

WARNING LABEL LOCATIONS
(FIG. 1.20.1)

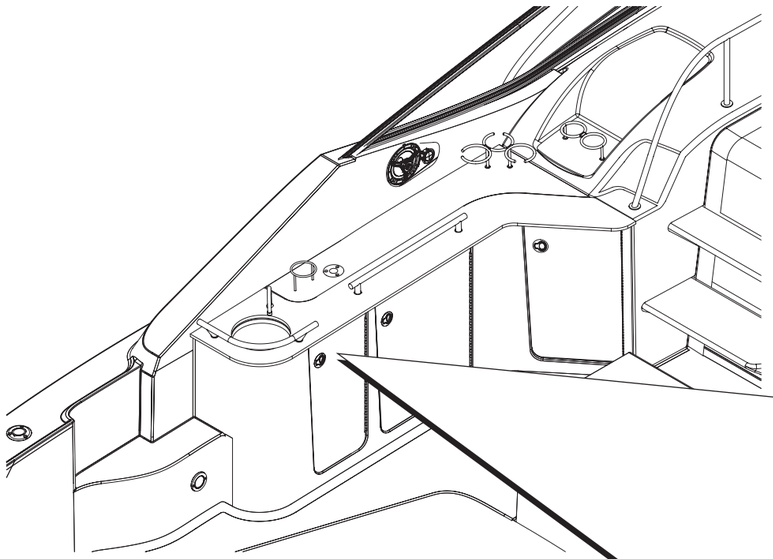

Save Our Seas

It is *illegal* to dump plastic trash anywhere into the ocean or navigable waters of the United States. Violation of these requirements may result in civil penalty up to $25,000, a fine of $50,000 and imprisonment for up to five years.

PLASTIC - Includes but is not limited to: plastic bags, styrofoam cups and lids, six-pack holders, stirrers, straws, milk jugs, egg cartons, synthetic fishing nets, ropes, lines, and bio or photo degradable plastics.

GARBAGE - Means paper, rags, glass, metal, crockery (generated in living spaces aboard the vessel-what we normally call trash), and all kinds of food, maintenance and cargo-associated waste.
"Garbage" does not include fresh fish or fish parts, dishwater, and gray water.

INSIDE 3 MILES

(and in U.S. Lakes, Rivers, Bays and Sounds)
PLASTICS
DUNNAGE, LINING AND PACKING MATERIALS THAT FLOAT
ANY GARBAGE EXCEPT DISHWATER/ GRAYWATER/FRESH FISH PARTS

3 TO 12 MILES

PLASTICS
DUNNAGE, LINING AND PACKING MATERIALS THAT FLOAT
ANY GARBAGE NOT GROUND TO LESS THAN ONE SQUARE INCH

12 TO 25 MILES

PLASTICS
DUNNAGE, LINING AND PACKING MATERIALS THAT FLOAT

12 TO 25 MILES

PLASTICS

DUNNAGE- Material used to block and brace cargo, and is considered a cargo associated waste.

DISHWATER- Means the liquid residue from the manual or automatic washing of dishes and cooking utensils which, have been pre-cleaned to the extent that any food particles adhering to them would not normally interfere with the operation of automatic dishwashers.

GRAYWATER - Means drainage from a dishwasher, shower, laundry, bath, and wash basin, and does not include drainage from toilets, urinals, hospitals, and cargo spaces.

MRP 1744745 SR-761

LOCATED INSIDE STORAGE AREA BELOW WET BAR

1. DOCKING/LIFTING/STORAGE

⚠ CAUTION

Do Not use cleats for lifting.

A. CLEATS

Cleats must not be used for lifting the boat; they are intended for docking or mooring use only.

When lifting the boat always keep the bow higher than the stern to drain the exhaust lines and to prevent water from running forward through the manifold and into the engine where it can become trapped. It may seem expedient to lift only the stern when changing a propeller, but this can result in water entering the engine cylinders, causing hydrostatic lock and resulting in possible engine failure. Even a small amount of water in the engine can cause rust and is to be avoided.

With fiberglass boats, severe gelcoat crazing or more serious hull damage can occur during launching and hauling if pressure is created on the gunwales by the slings. Flat, wide belting-type slings and spreaders long enough to keep pressure from the gunwales are necessary. Cable-type slings should be avoided. Do not place the slings where they may lift on underwater fittings.

Never hoist the boat with an appreciable amount of water in the bilge. Fuel and water tanks should preferably be empty, especially if of large capacity.

B. SUPPORTING THE BOAT

A cradle is the ideal support for the boat whenever it is not in the water. Properly designed and constructed, it will provide support at the proper points, which is essential to avoid stress on the hull. Do not rest boat on underwater fittings.

CLEAT / BOW & STERN EYE LOCATIONS
(FIG. 2.1.1)

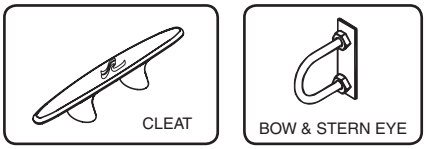

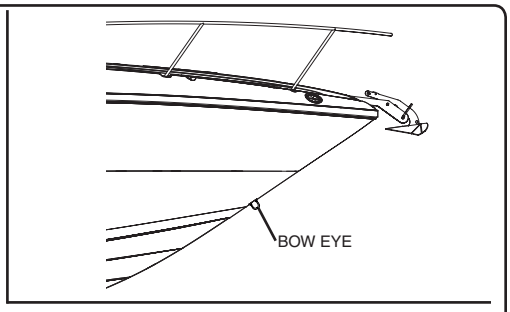

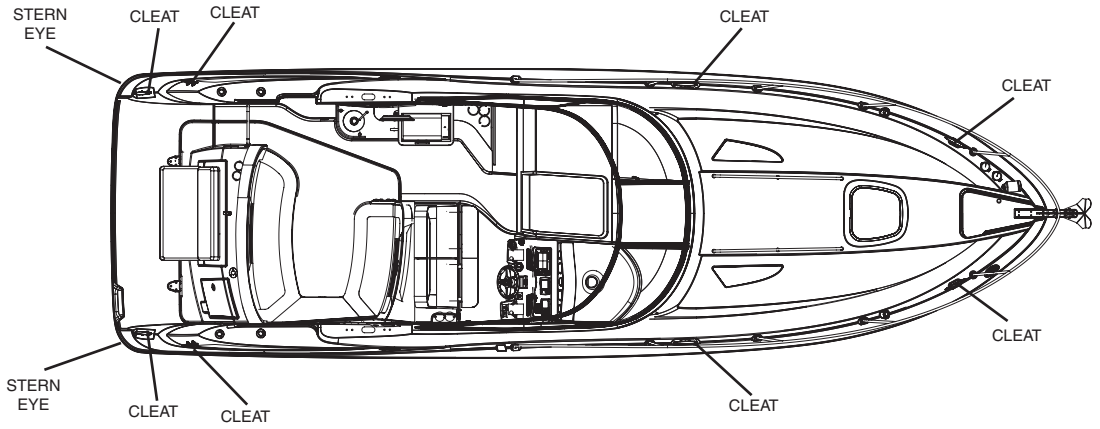

PROPER STORAGE
(FIG. 2.2.1)

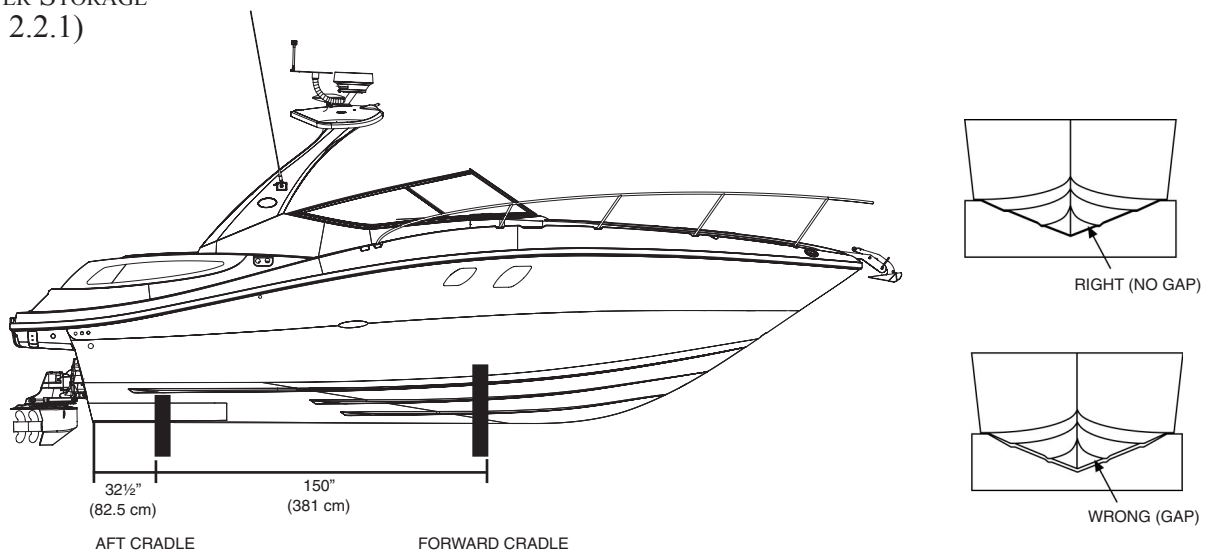

2. PASSENGER LOCATIONS

⚠ WARNING

Boat motion can be erratic.

You can fall overboard or be injured by hitting something in or on the boat.

All persons must be in cockpit area or cabin and be prepared for sudden boat movement.

Use front or bow deck area only during anchoring, mooring or emergencies.

⚠ WARNING

Wet decks are slippery.

You can be seriously injured if you slip and fall.

Wear slip resistant footwear secured to your feet and hold on to rails or boat structure.

1. When the boat is moving, all passengers must be in the cockpit area or in the cabin and must be on seating provided or, if standing, holding on firmly (Fig. 2.3.1).

   While the person at the wheel must alert passengers before any sudden or erratic boat movement, such as crossing wakes, rapid turns, sudden acceleration or deceleration, etc., an emergency action may be necessary before passengers can be warned. All passengers must be prepared for rapid boat movement and be able to hold on to prevent loss of balance.

2. When persons are on the working deck area, for anchoring, mooring or in emergencies, they must be holding on and be positioned so as to prevent falling. In bad weather and/or rough water, if it is essential to be on deck, persons should be closely tied to cleats, railing stanchions or other securely fastened boat hardware.

3. Engines must be turned off if the boat is near swimmers or persons are on the swim platform or the swim ladder.

PASSENGER LOCATIONS
(FIG. 2.3.1)

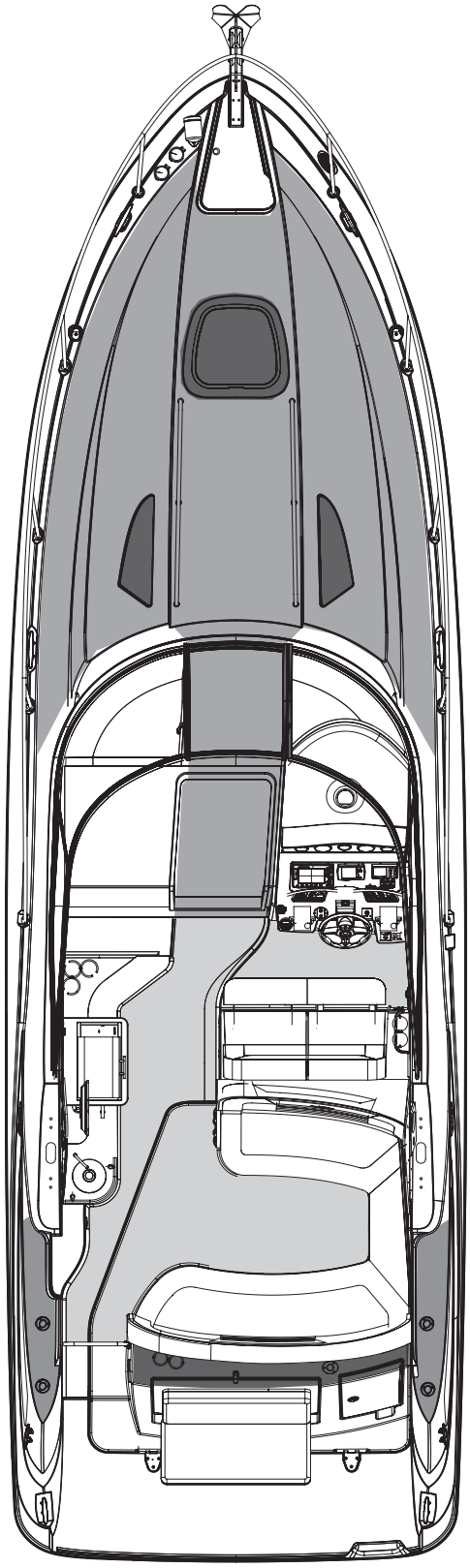

ACCOMMODATION DECK
(DECK AREA INTENDED FOR OCCUPATION DURING NORMAL OPERATION)

WORKING DECK
(DECK AREA INTENDED FOR OCCUPATION DURING ANCHORING, MOORING AND EMERGENCY OPERATION ONLY)

DO NOT WALK ON THIS AREA

⚠ WARNING

Wet decks are slippery.

You can be seriously injured if you slip and fall.

Wear slip resistant footwear secured to your feet and hold on to rails or boat structure.

⚠ DANGER

Rotating propellers can injure or kill you.

Shut off engine when persons are in water, near boat, on swim platform or ladder.

3. PROPULSION SYSTEM

A. STERN DRIVE ENGINES

The standard gasoline and optional diesel engines on your boat are a stern drive propulsion system also known as inboard-outboard engines. This type of propulsion system has the engine inside the boat secured to the hull's stringers at the rear end of the hull. The stern drive unit, also called the outdrive because it hangs below the hull, is part of the propulsion system that attaches to the outside of the hull or transom. The stern drive unit pivots to steer the boat.

REFER TO THE ENGINE OWNER'S MANUAL FOR OPERATING INSTRUCTIONS AND WARRANTY INFORMATION.

STANDARD STERN DRIVE (INBOARD-OUTBOARD) ENGINE (FIG. 2.4.1)

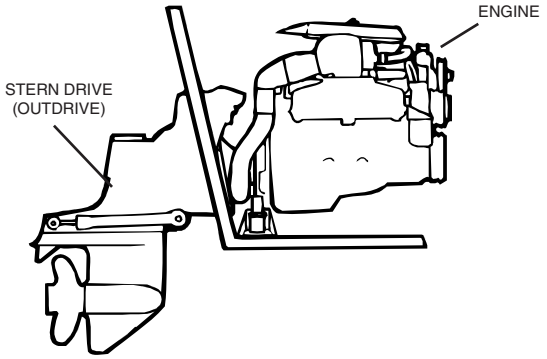

B. V-DRIVE ENGINES

Optionally available on your boat is a gasoline V-drive engine system. The V-drive system incorporates inboard engines with an angled transmission that allows the drive shaft to pass through the hull under the engine. See *Section 4 • Bilge and Underwater Gear* for more information on the engines in you boat.

REFER TO THE ENGINE OWNER'S MANUAL FOR OPERATING INSTRUCTIONS AND WARRANTY INFORMATION.

OPTIONAL V-DRIVE ENGINE (FIG. 2.4.2)

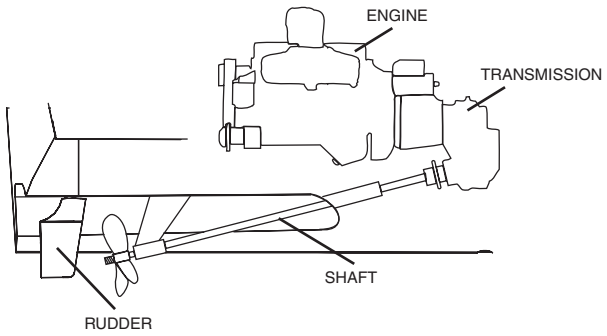

4. BASIC BOAT DIMENSIONS AND CLEARANCES

BOAT DIMENSIONS AND CLEARANCES
(FIG. 2.5.1)

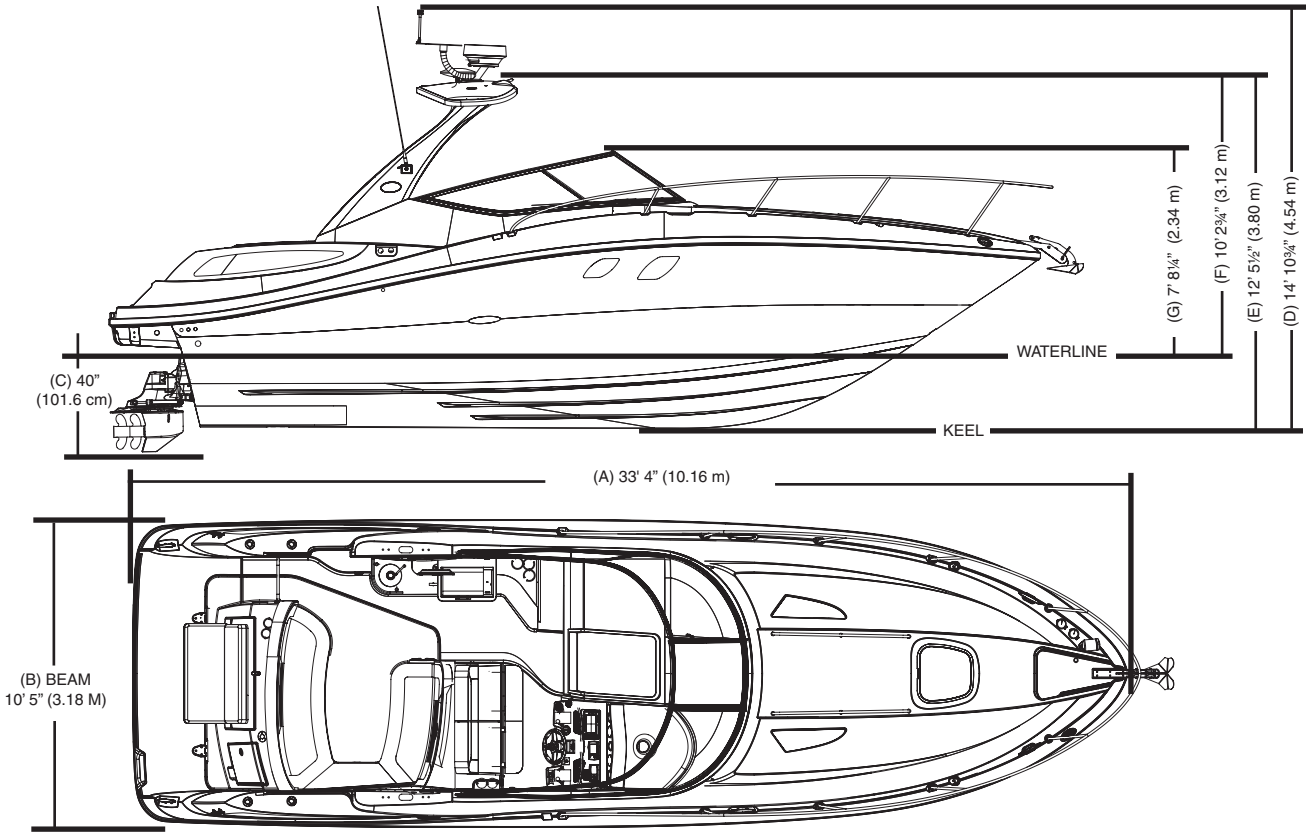

310 SUNDANCER® SPECIFICATIONS

(A) Overall Length With Std. Swim Platform	33ft. 4in.	10.16 m
(B) Beam (Width)	10ft. 5in.	3.18 m
(C) Draft (Twin Stern Drive Down)	40in.*	101.6 cm*
Draft (Twin Stern Drive Up)	24in.*	61.0 cm*
Draft (Twin V-Drive)	35in.*	88.9 cm*

* MINIMUM WATER DEPTH TO PREVENT RUNNING AGROUND

Dry Weight	13,350 lbs.	6,055 kg.
Fuel Capacity	200 gal.	757 liters
Usable Fuel	180 gal.	681 liters
Water Capacity	35 gal.	132.5 liters
Holding Tank	28 gal.	106 liters
Dead Rise	21°	

HEIGHT DIMENSIONS

(D) Keel to Top of Mast Light	14ft. 10¾in.	4.54 m
(E) Keel to Top of Arch	12ft. 5½in.	3.80 m
(F) Waterline to Top of Arch	10ft. 2¾in.	3.12 m
(G) Waterline to Top of Windshield	7ft. 8¼in.	2.34 m

5. DECK LAYOUT

GENERAL LAYOUT
(FIG. 2.6.1)

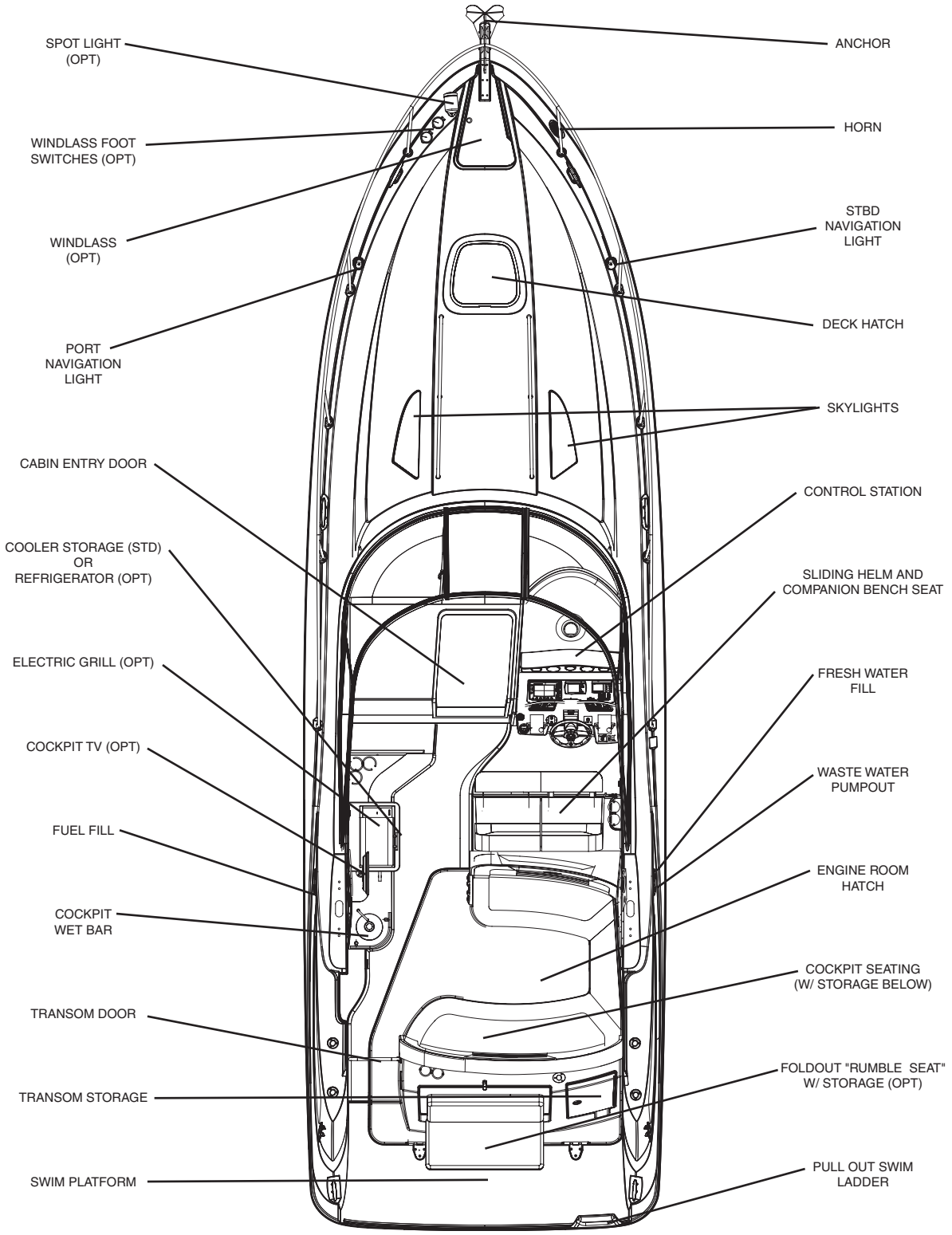

6. CABIN LAYOUT

CABIN LAYOUT
(FIG. 2.7.1)

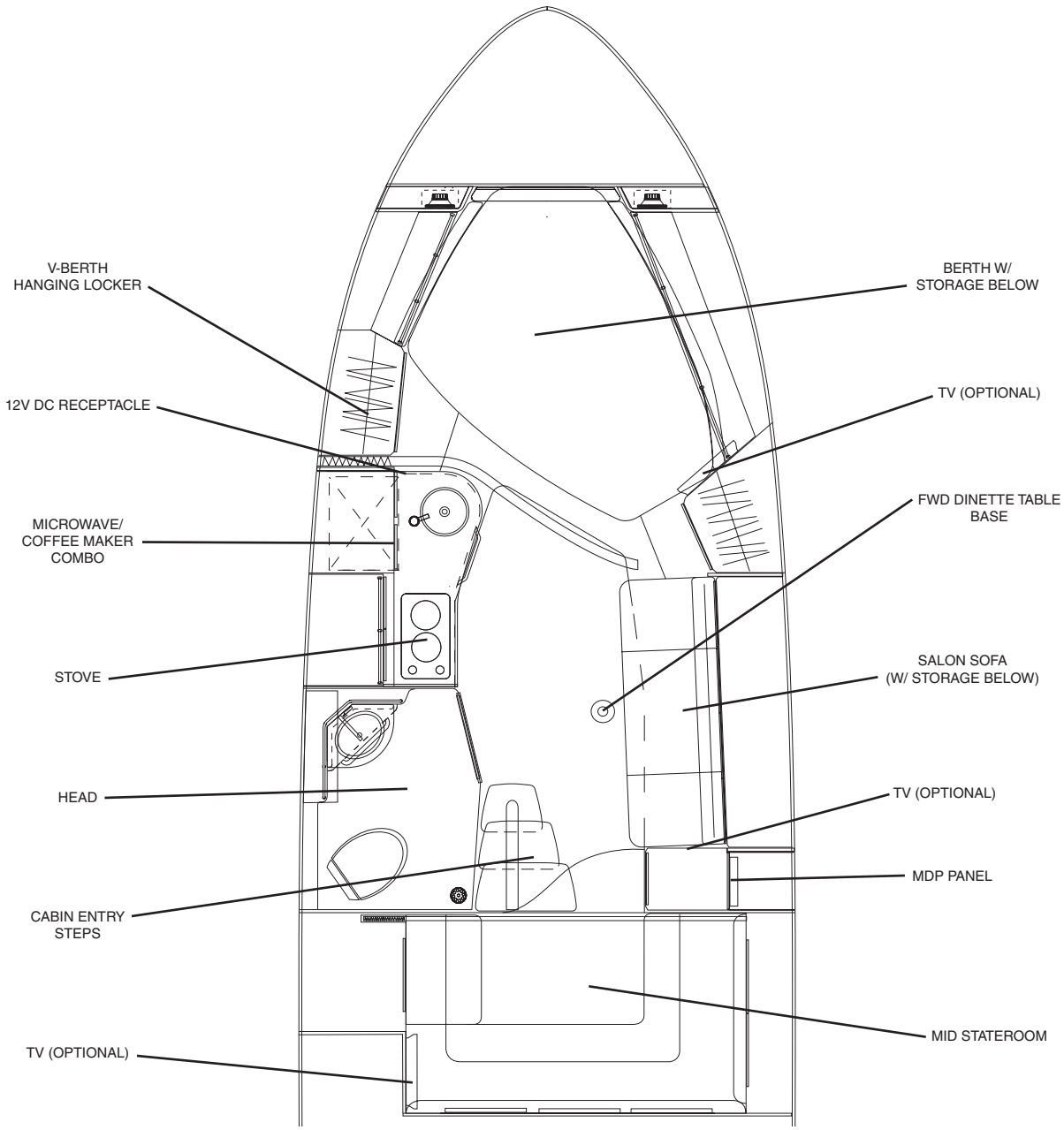

7. HELM, GAUGE & SWITCH LAYOUT

GAUGE PANEL (GAS ENGINE)
(FIG. 2.8.1)

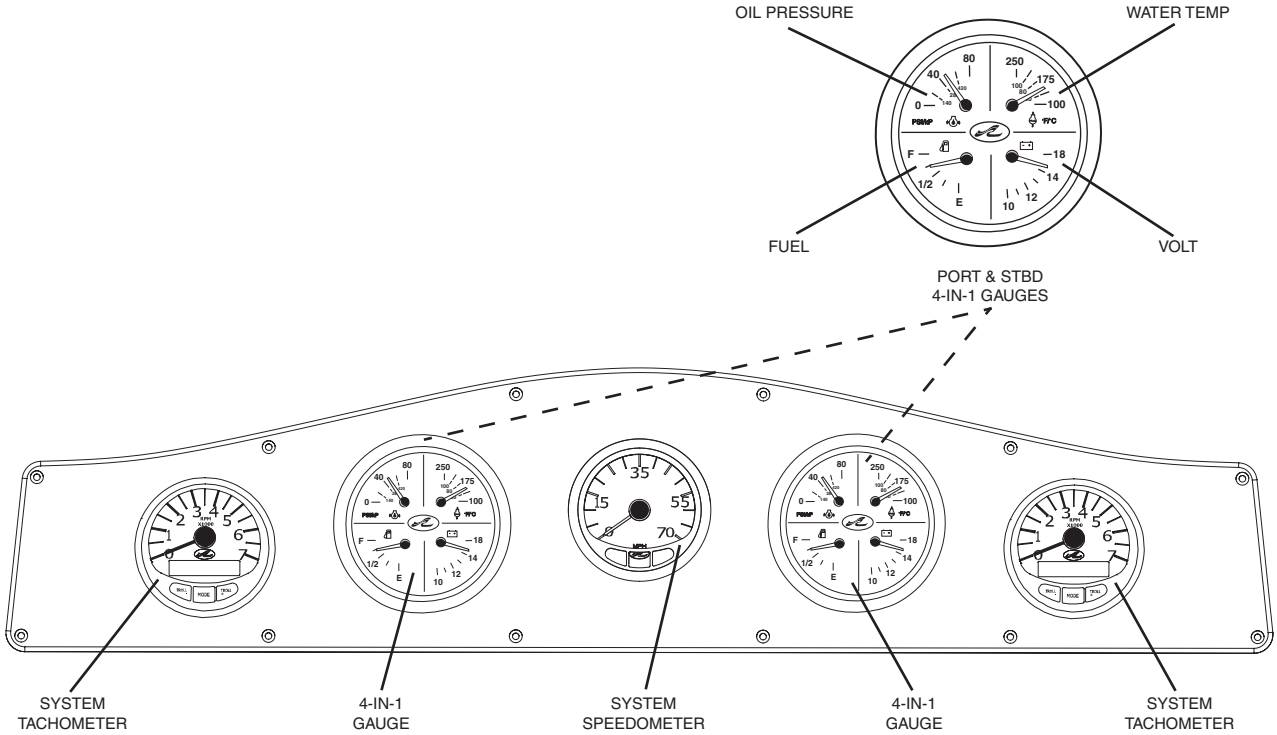

GAUGE PANEL (DIESEL ENGINE OPTION)
(FIG. 2.8.2)

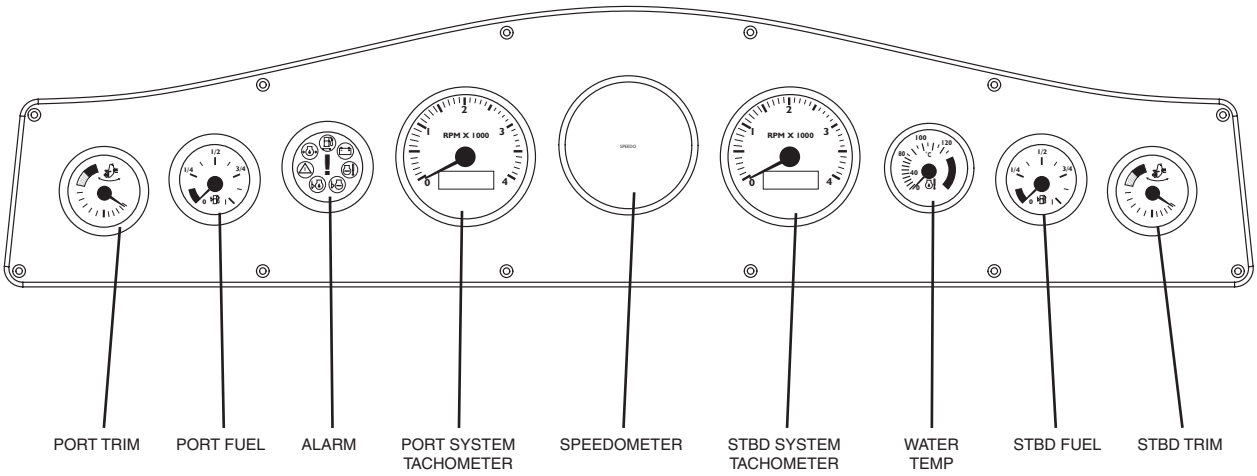

HELM, GAUGE & SWITCH LAYOUT (CONTINUED)

PORT SWITCH PAD
(FIG. 2.9.1)

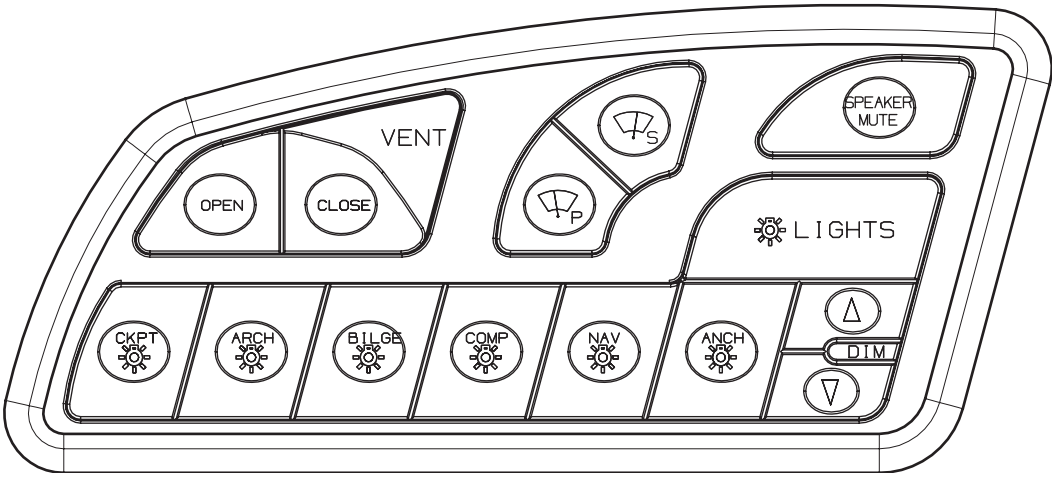

STBD SWITCH PAD
(FIG. 2.9.2)

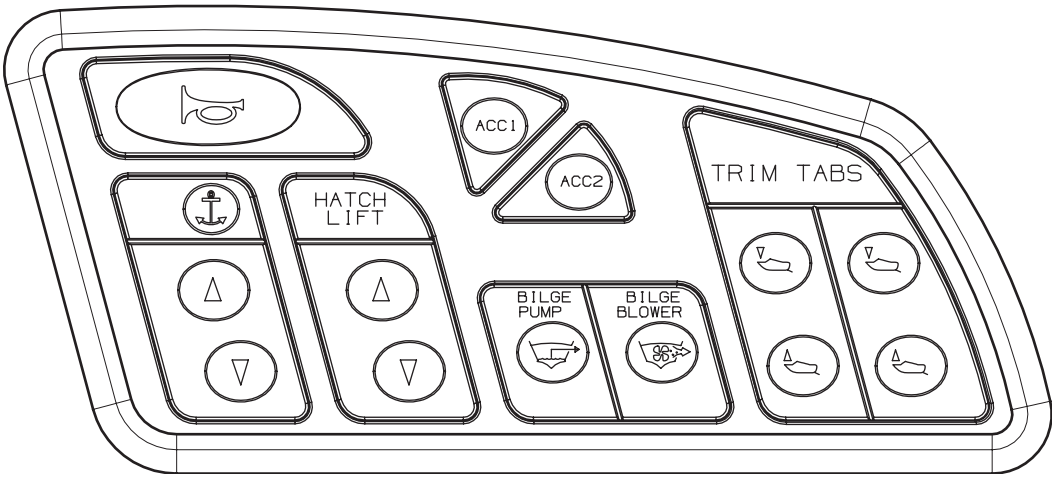

HELM, GAUGE & SWITCH LAYOUT (CONTINUED)

HELM LAYOUT (FIG. 2.10.1)

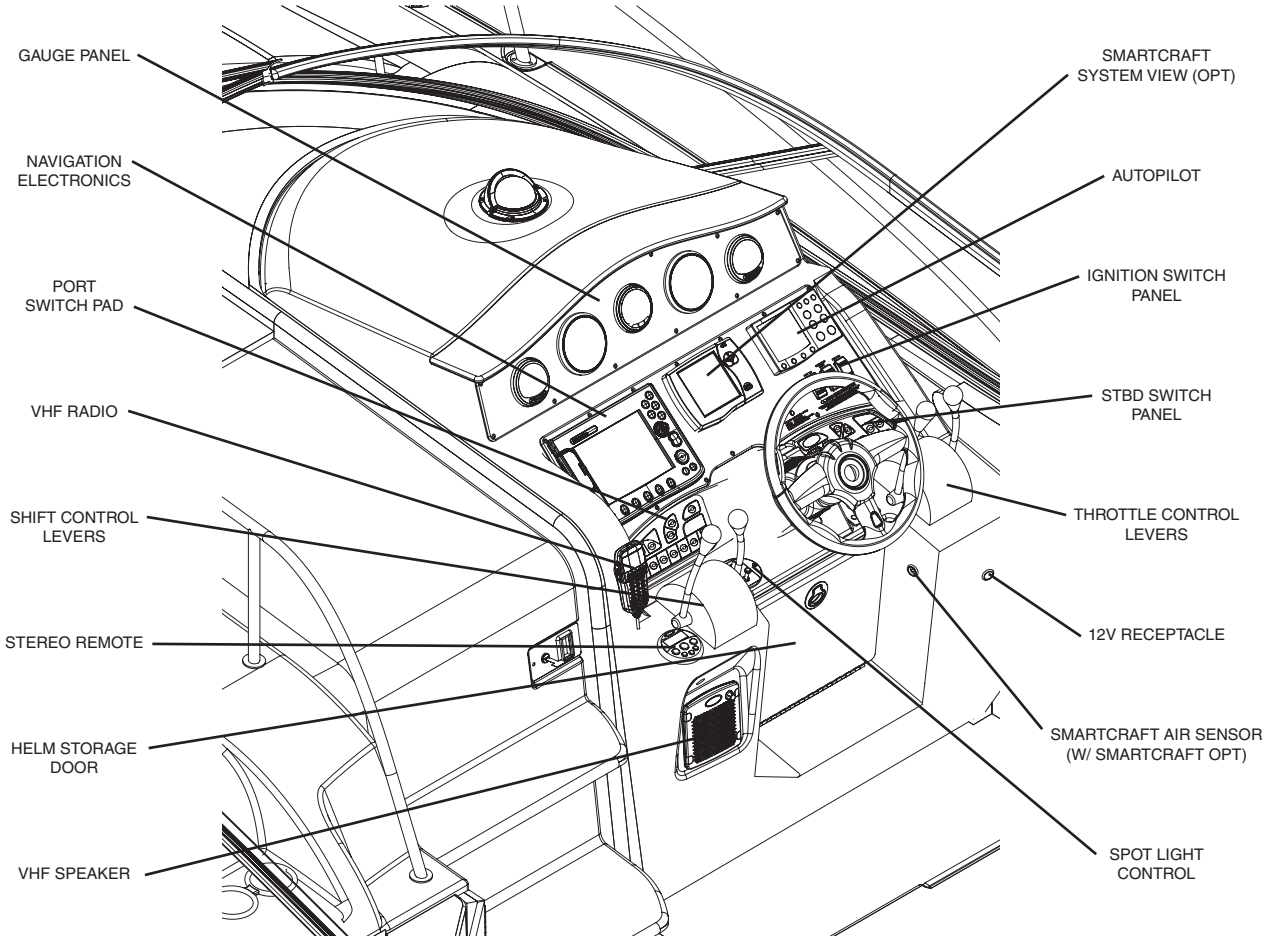

8. FUNCTION AND LOCATION OF THROUGH-HULL CUTOUTS

STARBOARD THROUGH-HULL CUTOUTS (STERN DRIVE)
(FIG. 2.11.1)

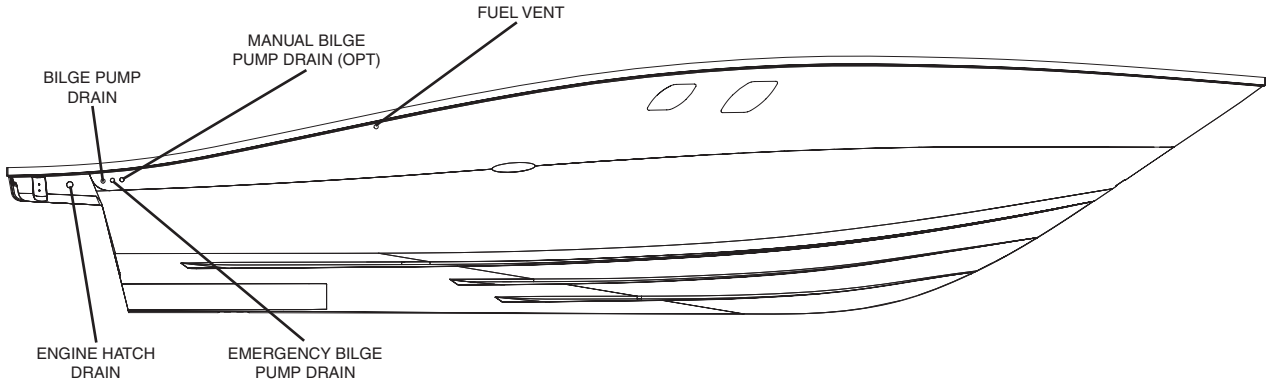

PORT THROUGH-HULL CUTOUTS (STERN DRIVE)
(FIG. 2.11.2)

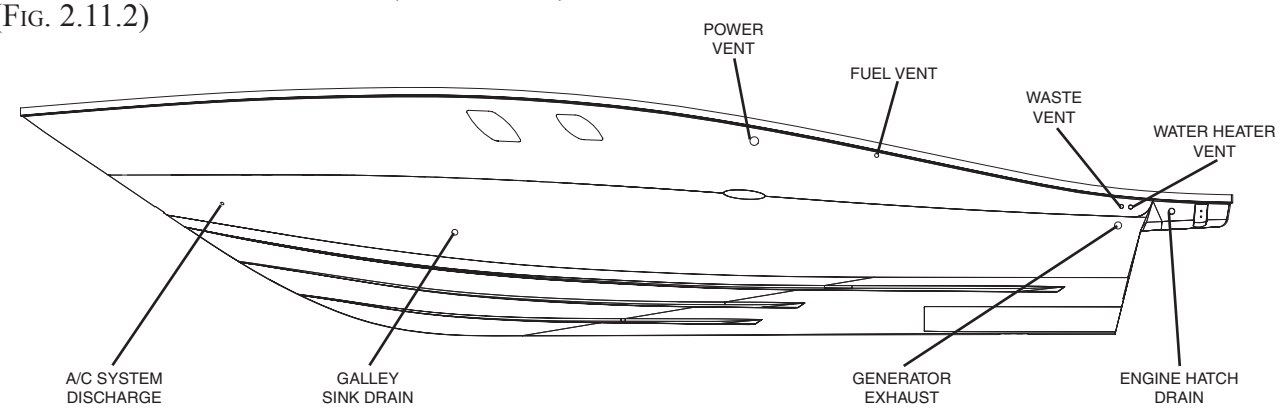

BILGE THROUGH-HULL CUTOUTS (STERN DRIVE)
(FIG. 2.11.3)

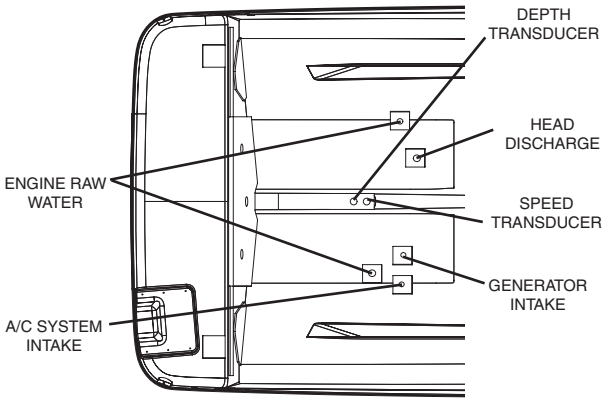

TRANSOM THROUGH-HULL CUTOUTS (STERN DRIVE)
(FIG. 2.11.4)

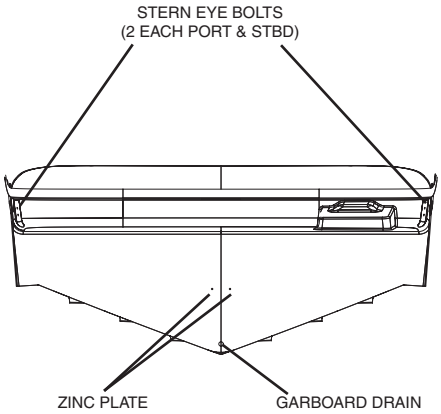

8. FUNCTION AND LOCATION OF THROUGH-HULL CUTOUTS

STARBOARD THROUGH-HULL CUTOUTS (V-DRIVE) (FIG. 2.12.1)

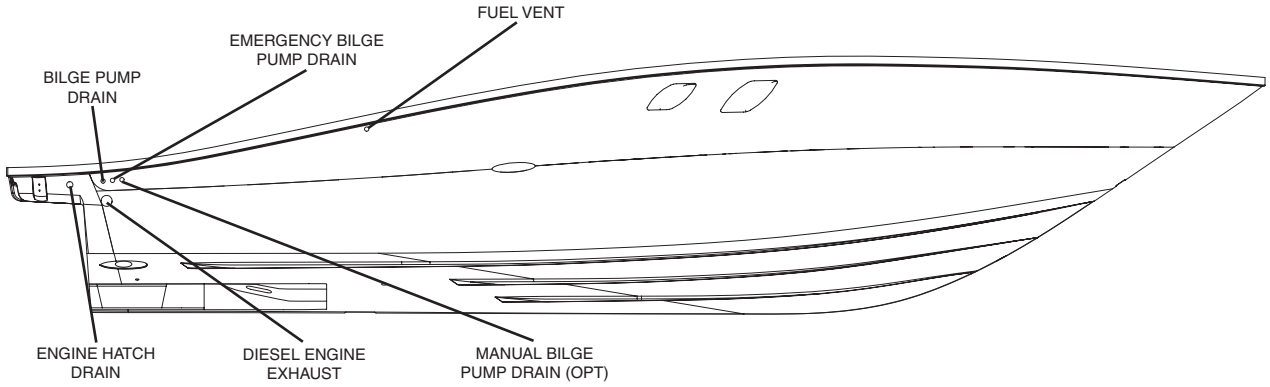

PORT THROUGH-HULL CUTOUTS (V-DRIVE) (FIG. 2.12.2)

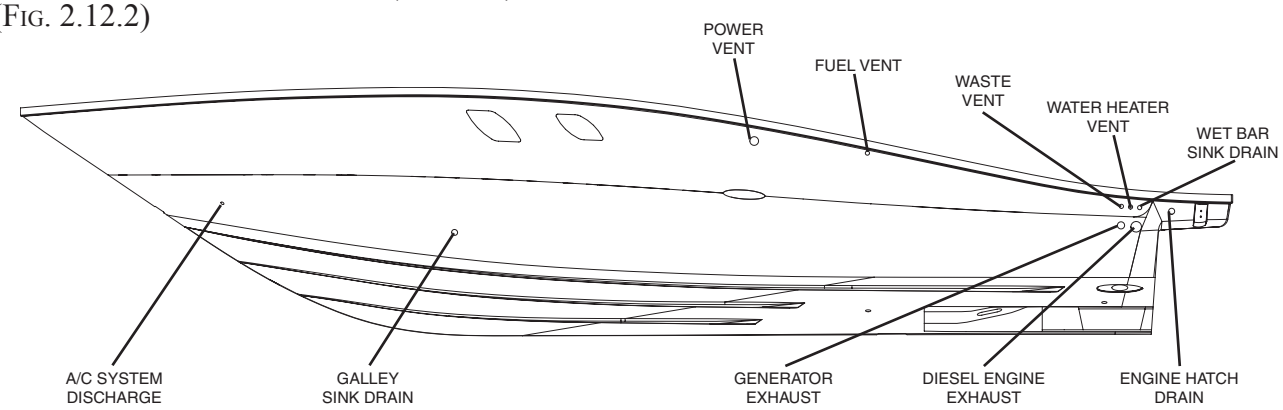

BILGE THROUGH-HULL CUTOUTS (V-DRIVE) (FIG. 2.12.3)

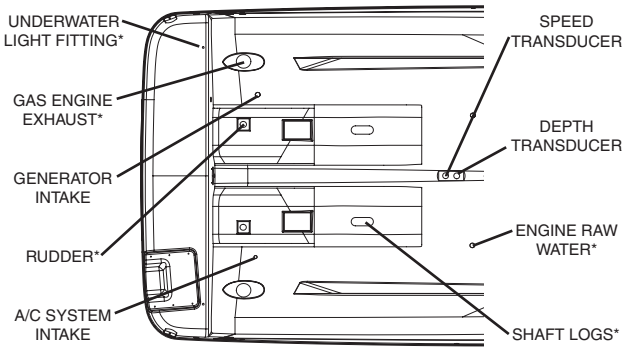

*PORT & STARBOARD TYPICAL

TRANSOM THROUGH-HULL CUTOUTS (V-DRIVE) (FIG. 2.12.4)

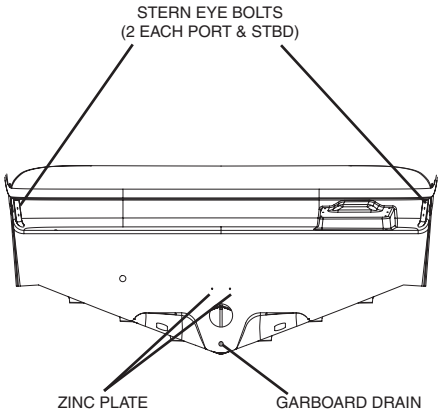

9. DESCRIPTION OF MAJOR CONTROLS

A. GEAR SHIFT AND THROTTLE CONTROL

Standard on the 310 DA are dual hydraulic gear shift and throttle engine controls. Read and understand the information in the Owner's Manual Packet for your yacht model's gear and throttle control.

The gear shift levers have three positions: forward, neutral (center), and reverse. The gear shift levers must be in the neutral position when starting the engines. A detent can be felt when the control is in exact neutral. **Forward and reverse positions should always be in the full travel extremes in either direction for positive engagement and minimum wear.** Each gear shift lever can be used independently from the other, for example, when idling one shift can be put in forward and the other in reverse for tight maneuvering. **Shift gears only with engines idling.**

⚠ WARNING

Shift selectors to NEUTRAL before starting engines.

Shift only when engine is at IDLE.

Reversing at high speeds can cause flooding/swaping due to water being pushed over the transom.

⚠ CAUTION

Shift Quickly; easing into gear can damage the transmission.

Hydraulic controls FORWARD and REVERSE positions should always be in full travel extremes in either direction for positive engagement and minimum wear.

The throttle controls regulate the RPM of the engines. Pushing the levers forward will increase engine RPM. Regulating RPM of the engines will control the speed of the boat through the water.

NOTE: Prior to starting engines, put throttles at IDLE and gearshifts in NEUTRAL.

SHIFT & THROTTLE CONTROLS
(FIG. 2.13.1)

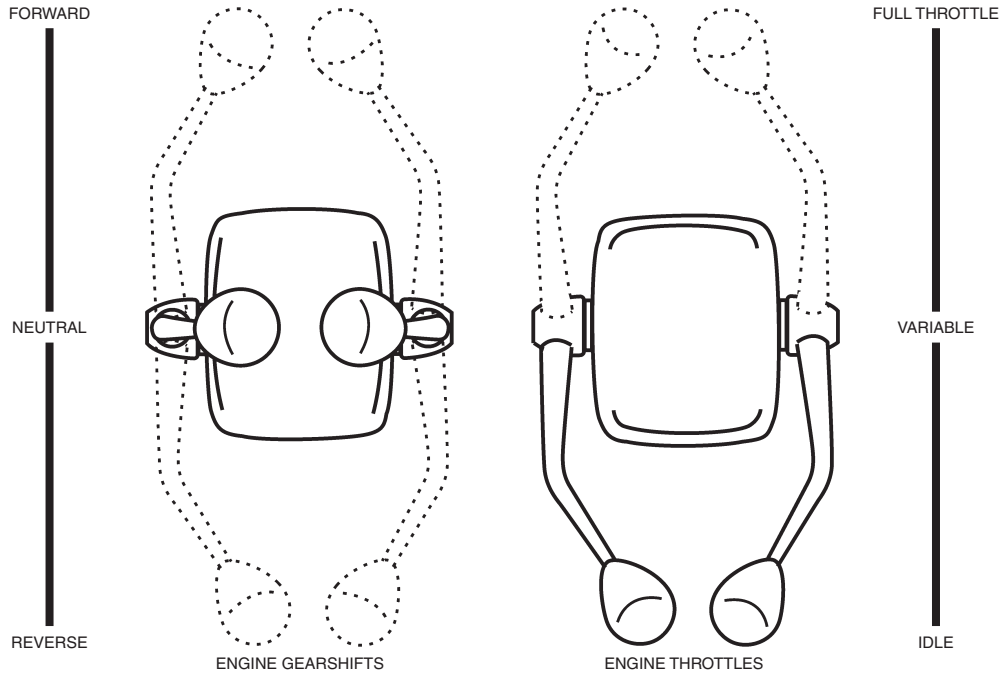

OPERATION

1. Throttle Levers:

   Forward motion - increases Throttle

   Aft Motion - Decreases Throttle

2. Gearshift Levers:

   Forward Position - FORWARD

   Center Position - NEUTRAL

   Aft Position - REVERSE

MAINTENANCE

The gear and throttle lever bodies are made of anodized aluminum. To clean them, a warm soapy water solution should be used. DO NOT use an abrasive compound.

NOTE: Refer to your engine Owner's Manual to operate the throttle arm by hand for maintenance.

REFER TO OWNER'S MANUAL PACKET FOR INSTRUCTIONS AND WARRANTY INFORMATION.

B. DIGITAL THROTTLE & SHIFT CONTROL (OPT)

Optionally available on the 310 DA is the Digital Throttle and Shift control system (DTS). The DTS system may be configured as either a single control unit with combined throttle/shift levers (one for each engine), or separate throttle and shift control units.

In either case, the DTS system functions similarly to mechanical Shift and Throttle Control systems. The DTS system uses electronic signals rather than push/pull cables to control the engine gear and speed. This makes shifting gears and adjusting speed much easier.

Starting the engine is also simplified by a single Start/Stop button located on the Throttle & Shift lever. To start the engine, press and release the Start/Stop button and the DTS system automatically starts the engine (without having the engage the Throttle Only function in order to pump fuel to start the engine). To stop the engine, simply press the Start/Stop button and the engine shuts off.

MERCURY DTS CONTROLS
(FIG. 2.14.1)

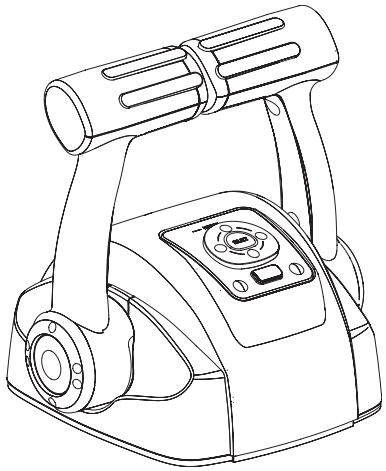

REFER TO THE PRODUCT OWNER'S MANUAL FOR COMPLETE OPERATING INSTRUCTIONS AND WARRANTY INFORMATION.

C. POWER TRIM UNIT AND GAUGE

The power trim allows the operator to raise and lower the stern drive unit while underway to provide the ideal boat angle (in relation to the water surface) for a given load and water condition.

Trimming UP rotates the stern drive and propeller away from the transom. Trimming DOWN rotates the stern drive and propeller closer to the transom.

When the stern drive is trimmed DOWN, the bow of the boat is being forces down. If the trim is in the full DOWN position when accelerating from idle to plane, the boat will plane faster with less bow rise. Once on plane, the stern drive unit can be trimmed UP slightly. This will raise the bow of the boat slightly and increase speed. You will need to try small differences in the stern drive position to determine the trim position you prefer under various conditions.

EFFECTS OF POWER TRIM
(FIG. 2.15.1)

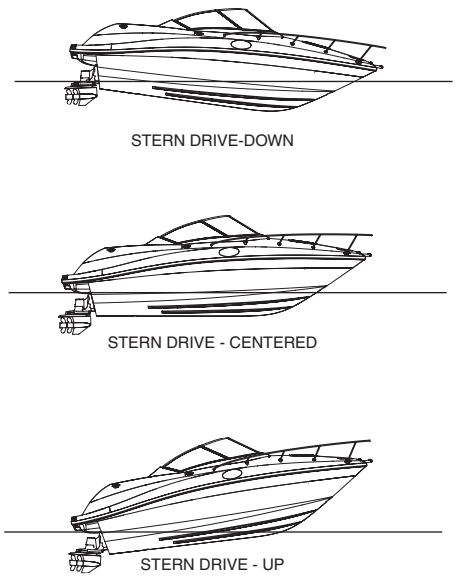

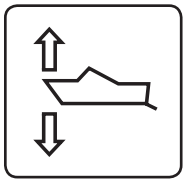

If you raise the stern drive too far while you are on plane, you could cause a loss of speed and power due to a condition called "ventilation." If this happens, there will be a sudden increase in engine RPM and a loss of speed. Do not let this condition continue. Immediately reduce your engine RPM and trim the stern drive DOWN slightly until the engine slows down and you regain forward speed.

The trim gauge indicates the position of the stern drive relative to the transom.

REFER TO YOUR ENGINE OPERATOR'S MANUAL FOR PROPER TRIM GAUGE SETTING.

D. TRIM TABS

The trim tabs are two flat plates, hinged below the water line on the transom at the rear and are raised and lowered hydraulically by using the switches located on the starboard switch panel at the helm (see Fig. 2.9.2).

The trim tabs are used to adjust the sideways listing of the boat due to uneven loading, a strong cross wind or propeller torque. The twisting effect

RUNNING ATTITUDE	LIST	PUSH
BOW UP	.....	TOP OF BOTH SWITCHES
BOW UP	PORT	TOP OF STARBOARD SWITCH
BOW UP	STARBOARD	TOP OF PORT SWITCH
BOW DOWN	PORT	BOTTOM OF STARBOARD SWITCH
BOW DOWN	STARBOARD	BOTTOM OF PORT SWITCH

TRIM TABS
(FIG. 2.15.2)

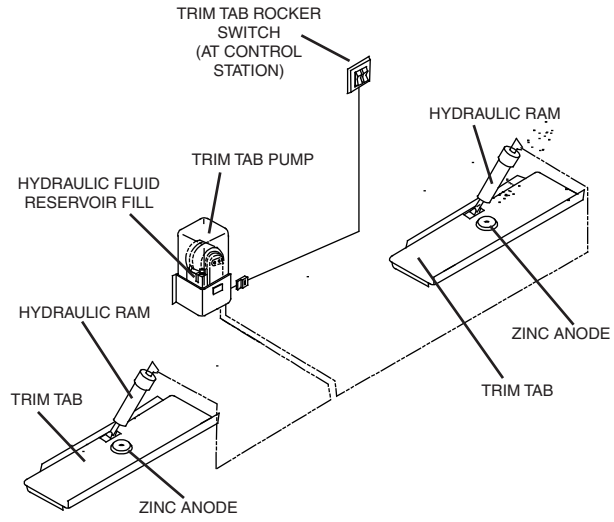

⚠ CAUTION

Always check oil pressure and water gauges while moving, even if your engine has an alarm.

Shut down engine immediately if gauges are not in normal ranges, or alarm sounds.

Do not restart engine until problems are corrected.

of propeller torque is especially pronounced when running the engine at high horsepower output. To correct the listing, adjust the trim tabs to level the boat. When the boat is level, right to left, the steering effort will be the same for right and left turns.

Lower the trim tabs on the listing (lower) side by pushing the top half of the trim tab switch in one-half second bursts until the boat is righted.

Using both switches to lower both tabs on a side-to-side balanced boat will lower the bow, when on plane, if the rear of the boat is highly loaded. Again, use only short bursts of the trim tab switches to adjust the trim.

When running at cruising speed, the trim tabs should be fully up, unless the rear is heavily loaded.

In heavy following seas or when running in an inlet, best maneuverability is obtained with a bow high attitude. To be sure the tabs are full up, push the bottom halves of the switches for several seconds.

10. IMPORTANT GAUGES

A. SMARTCRAFT™ GAUGE SYSTEM

Your boat is equipped with the SmartCraft™ instrumentation system. The SmartCraft™ system consists of a smart tachometer with a display screen.

The SmartCraft™ system provides a wide range of engine, boat systems and environmental information to the boat operator to help make your time on the water more enjoyable by providing accurate systems information in one convenient location, right at the helm. Below is a list of features the SmartCraft™ system offers.

SMARTCRAFT SYSTEM TACH
(FIG. 2.16.1)

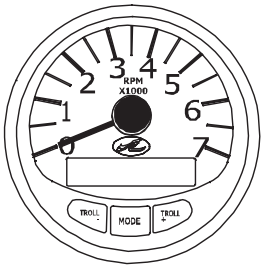

Refer to the SmartCraft™ owner's manual in the owner's packet for all SmartCraft™ operating instructions.

SOME FEATURES INCLUDE:
(Depending on engine type and software version)

SYSTEM TACH DISPLAY SCREEN:

(FIG. 2.16.2)

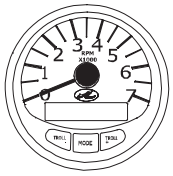

- Depth/Water Temperature
- Engine Alarm/Hourmeter
- Fuel Consumption/Usage
- Trim Level
- Troll Control
- Voltage
- Digital Speed

B. TACHOMETER

The tachometer indicates the revolutions per minute (RPM) of the engine. (It does not indicate the speed of the boat.) Your Engine Operator's Manual indicates the maximum full throttle RPM at which your engine should operate. This must not be exceeded or serious engine damage will occur. The tachometer should also be used to determine the most comfortable and economical cruising RPM.

C. OIL PRESSURE, WATER TEMPERATURE, SPEEDOMETER AND FUEL GAUGES

These gauges function on your boat the same way they do on your car or truck. You must continually check these gauges visually to make certain there are no engine system problems even if your boat engine has an alarm system.

D. MAGNETIC COMPASS

MAGNETIC COMPASS
(FIG. 2.17.1)

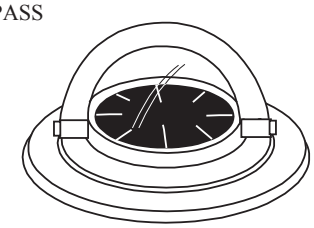

Your compass, properly corrected, will indicate magnetic north (not true north). A compass must be adjusted by a qualified person. The reason for this is that nearby instruments or objects containing magnets or current-carrying electrical wires will influence the compass reading. This is especially true if you add electronic devices to the helm station.

After your compass has been professionally adjusted. You will be given a deviation card or chart indicating the correction to be applied when laying out a compass course or making navigational calculations. **Keep this correction card or chart at the helm.**

NOTE: The compass adjustment is only good for the equipment arrangement that existed at the time of the adjustment. If you place different equipment or remove equipment from the vicinity of the compass, you cannot rely on the compass reading. The compass must be readjusted by a qualified person after equipment is added or removed from the vicinity of the compass.

NOTE: The compass roses shown on navigational charts have both true north and magnetic north directions superimposed. Make certain you plot course compass directions from the magnetic north compass rose.

When not in use, the compass should be protected from excessive and prolonged sunlight. If your compass becomes sluggish or erratic, it should be serviced by an authorized repair station.

To keep the Plexiglas dome free from scratches, remove salt deposits and dust with a damp cloth. An occasional treatment with paste wax will help preserve the dome surface.

REFER TO OWNER'S MANUAL PACKET FOR INSTRUCTIONS AND WARRANTY INFORMATION.

11. NAVIGATION AND ANCHOR LIGHTS

Navigation lights (Fig. 2.17.2) MUST be on while underway from sunset to sunrise or in conditions of reduced visibility. "Underway" means the boat is not docked or at anchor. Trolling or drifting with engine off is considered "underway" and navigation lights must be used.

If you are anchored in open water, i.e. where other boats can approach yours, you must display your anchor light (Fig. 2.17.2): a white light that can be seen from all possible directions, i.e. 360 degrees.

Read the "Federal Requirements and Safety Tips for Recreational Boats" provided in your kit.

NAVIGATION LIGHTS & SWITCHES
(FIG. 2.17.2)

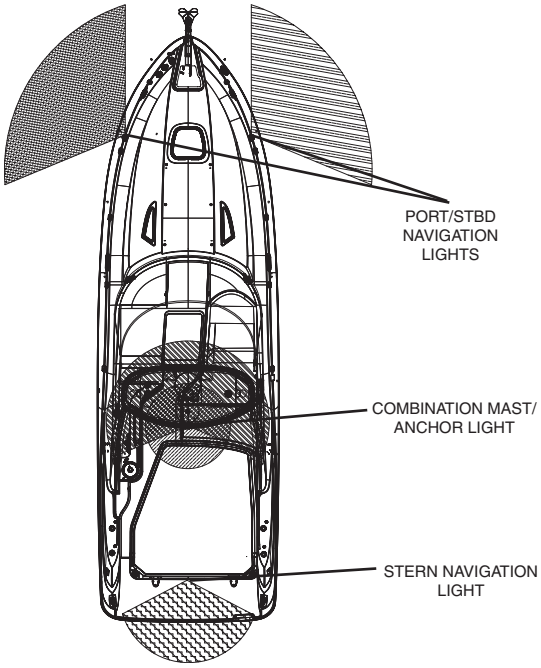

CONTROL STATION PORT SWITCH PAD

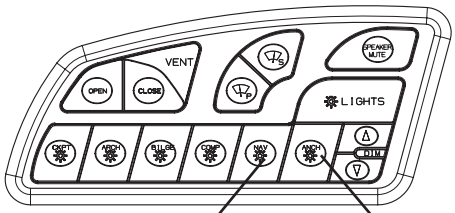

THIS PAGE LEFT INTENTIONALLY BLANK

1. PRE-LAUNCH, LAUNCH AND POST-LAUNCH CHECKLIST

Listed below are the critical items you must check and do each time you use your boat. It does not list all of the necessary maintenance and service items required to keep your boat running properly. These other items are found in Section 8.

BEFORE LAUNCH

- ❒ Drain plug installed
- ❒ Enough fuel for trip
- ❒ Float plan given to friend or relative
- ❒ Navigation charts for trip
- ❒ Weather forecast - safe

IN THE WATER, BEFORE BOARDING PASSENGERS OR STARTING ENGINE

- ❒ Equipment stored and balanced
- ❒ No gas smell in engine compartment
- ❒ Engine oil and steering fluid levels - OK
- ❒ Battery switch on
- ❒ Bilge pump working
- ❒ Bilge blower on
- ❒ Radio and navigation equipment functioning

PASSENGERS

- ❒ Wearing PFDs
- ❒ Seated properly
- ❒ Given safety instructions

STARTING ENGINE

- ❒ Make sure you have read and understand the dangers of Carbon Monoxide (CO) information in this manual.
- ❒ Bilge blower on for at least four (4) minutes. Feel to confirm airflow at hull vent on hull side. Inspect bilge area for visual and odor confirmation that there are no fuel leaks.
- ❒ Gear shift in neutral position. Throttle pumped before starting, if necessary.
- ❒ Oil pressure, engine temperature, voltage - OK after starting and warm up.

UNDERWAY

- ❒ Gradual acceleration and deceleration and turning.
- ❒ Aware of surroundings at all times.
- ❒ Operate so as to prevent buildup of Carbon Monoxide (CO)
- ❒ Monitor weather
- ❒ Use navigational aids in water and on shore
- ❒ Keep passengers safe
- ❒ Check fuel consumption regularly
- ❒ Check all gauges frequently

END OF TRIP

- ❒ Equipment dry and stored.
- ❒ Electronic equipment and switches off.
- ❒ Battery switch off.
- ❒ Notify person who had float plan.
- ❒ Boat covered properly for trailering, docking or mooring.
- ❒ If boat is pulled from water, drain plug removed.
- ❒ If boat is pulled from water, hull and propeller inspected for damage.

⚠ WARNING

An improper trailer can cause structural damage to the hull.

A damaged hull can be unsafe; it could cause the boat to sink.

Use a trailer that can properly support the boat's weight and shape. Get professional help in picking the right trailer for your boat.

2. FUELING THE BOAT

⚠ DANGER

NO SMOKING

GASOLINE VAPORS ARE EXPLOSIVE

NOTICE

GASOLINE RECOMMENDATIONS

Minimum octane rating of 87 AKI.

The use of improper gasoline or additives can damage your fuel system and is considered misuse of the system. Damage caused by improper gasoline or additives WILL NOT be covered under warranty.

⚠ DANGER

Gasoline vapors can explode from static electricity if fueling is not done properly.

Read and understand this section and *Section 5 • Fuel System*

The fuel fills are located on the port and starboard mid decks (Fig. 3.2.1). Do not mistake the waste pump out cap located on the port mid deck or the fresh water fill cap located on the starboard mid deck for the fuel fill cap.

Refer to your engine manual for the proper grade of fuel for gasoline engine(s).

BEFORE FUELING

- Fuel during daylight hours.
- Tie boat to the dock.
- Shut off engine, bilge blower and all other electrical equipment.
- Shut off gas burning appliances (gas stove, etc.).
- Close all hatches, doors and keep engine compartment closed to prevent gasoline fumes from entering the cabin or cockpit area.
- All passengers must leave the boat, as a precaution.
- There must be no smoking or any flames within 20 feet of the boat, before, during and for at least 5 minutes after fueling is completed.

FUEL FILL LOCATION
(FIG. 3.2.1)

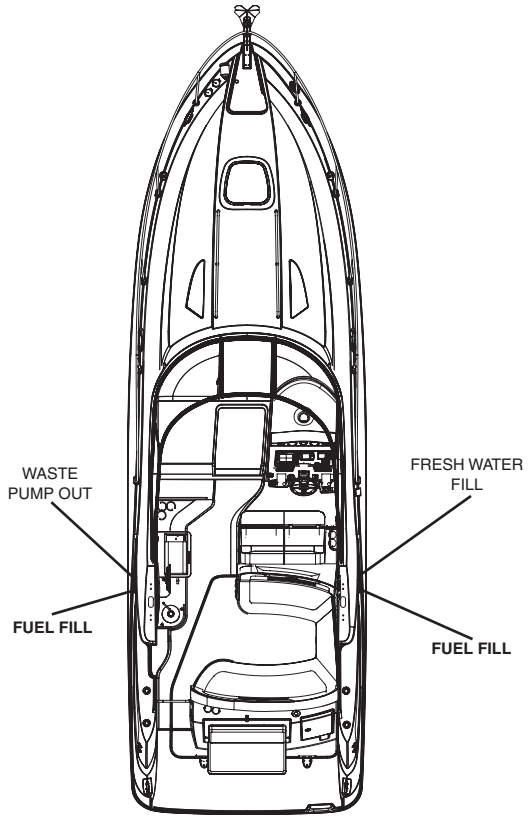

- Open fuel fill cap and insert hose nozzle into the fuel fill opening. Fuel fill hose nozzle must contact the fuel fill opening BEFORE adding fuel and throughout the fueling process to prevent discharge of static electricity.

FILLING THE TANKS

- Check the fill plate label to ensure that fuel is placed ONLY in the fuel tank. The fuel fill plates are located on the port and starboard mid decks (Fig. 3.2.1).
- Keep nozzle in contact with fuel fill opening at all times during fueling.
- Listen as tank fills and stop adding fuel before it spills. Fuel must have room for expansion.

After Filling

- DO NOT wash spilled fuel overboard. Wipe up any spill with rags or paper towels and dispose of them properly on shore.
- Open engine compartment and check for fuel fumes. This is especially important if your boat is equipped with a gasoline engine. Leave compartment open until no odor is apparent. Close compartment.
- If fumes in the engine compartment do not disappear, do not turn on blower or start engine. Get help from trained and experienced persons before using the boat.
- Turn on blower for four minutes, then restart engine.
- Assist passengers back into the boat.

3. Boarding

⚠ WARNING

Wet decks are slippery.

You can be seriously injured if you slip and fall.

Wear slip-resistant footwear secured to your feet and hold onto rails or boat structure.

- DO NOT overload the boat.
- Board one person at a time and give assistance as needed.
- Transfer gear and equipment by handing it from a person on the dock to a person on board. You can lose your balance and be injured if you attempt to board while carrying equipment or gear.
- Distribute the weight of equipment and passengers as evenly as possible to keep the boat balanced.
- Stow gear and equipment so that it is accessible, but everything is to be stored in places to prevent it from shifting if the boat encounters rough water or weather.

4. Personal Flotation Devices (PFDs)

- Operator must instruct all passengers on location and use of PFDs (See page 1.4 for type and usage).
- Children less than sixteen (16) years of age and all nonswimmers, adults as well as children, must wear properly-sized PFDs at all times when aboard.
- ALL passengers should wear PFDs. By the time someone falls overboard, it can be too late for them to put on a PFD and fasten it properly. This is especially true in colder waters, below 70°F, where survival time, before hypothermia sets in, is measured in minutes.
- If there are passengers not wearing PFDs, the PFDs must be readily accessible. “Readily accessible” means out of the storage bag and unbuckled.
- All throwable flotation devices (cushions, rings, etc.) must be right at hand.

5. Passenger Instruction and Location

- Everyone on board must be told about the boat’s behavior from starting to getting up on plane.
- Before the operator does any high-speed maneuvers or rapidly accelerates or decelerates the boat, passengers must be warned to sit and hold on and must heed the warning.
- The operator may have to make rapid changes in speed and/or direction to avoid a problem, with little or no time for alerting passengers. It is critical that all passengers be seated in the designated seating areas and holding on at all times to prevent falling overboard or getting knocked about in the boat when underway.
- If standing, maintain a firm grip on handholds. When walking, grasp handholds.

6. STARTING THE ENGINE

⚠ DANGER

Gasoline vapors can explode

Before starting the engines, open engine compartment and check for gasoline smell.

- **If you smell gasoline, do not start engine; get everyone off the boat and get trained help to find and fix the problem.**

If there is no gasoline smell, perform checks specified by manual, then and only then, close engine compartment and run blower for at least 4 minutes before starting.

The engine operation and maintenance manual furnished with your boat describes pre-start and starting procedures. We urge you to thoroughly read and understand your engine manual.

Listed below are basic pre-start and starting reminders. These are not a substitute for the engine manufacturer's specific recommendations.

Open the engine compartment and check for the smell of gasoline.

- IF YOU SMELL GASOLINE, get everyone off the boat, do not operate any electrical switches or light any matches, lighters, etc. Get trained help to find and fix the problem before starting the engine or operating any switches on the boat.

(FIG. 3.4.1)

- If you DO NOT smell gasoline...

1. Check all fluid levels and any other necessary checks as specified in Section 8 and in the engine manual.

(FIG. 3.4.2)

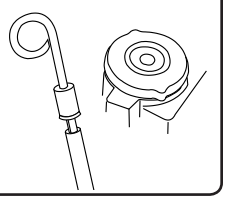

2. Check that water level in bilge is minimal. Verify that the bilge pump is operating by turning the bilge pump switch to MANUAL and listening for the pump running and check to see that bilge water is being pumped overboard.

3. Close the engine compartment and turn on the battery switch located under the helm bench seat.

(FIG. 3.4.3)

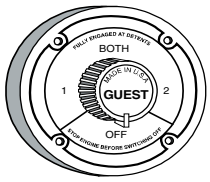

4. Check fuel level. Be sure you have enough fuel for your trip. Remember the "1/3 Rule": Use no more than 1/3 of your fuel for outbound trip; use 1/3 of the fuel for return trip; keep 1/3 for reserve in case of emergency.

(FIG. 3.4.4)

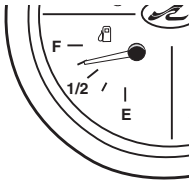

5. Run bilge blowers for at least 4 minutes before attempting to start engine

   Unlike your automobile engine which is naturally ventilated even when it is not moving, your boat engine compartment (the bilge) does not have sufficient natural ventilation when the boat is not moving or moving slowly. That is why the engine compartment must have forced ventilation, using the bilge blower, to remove potentially explosive gasoline vapors, before the engine is started and when the boat is moving slowly.

   Because it may be difficult to remember to turn on the bilge blower every time you slow down the boat, it is recommended that the bilge blower run all the time when the engines are running.

6. Place drive unit in full DOWN/IN position (Stern Drives Only).

(FIG. 3.4.5)

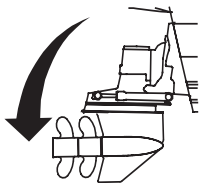

7. (For DTS System skip to Step 8) Put shift control lever into neutral and the throttle control lever in idle; then for a:

(FIG. 3.5.1)

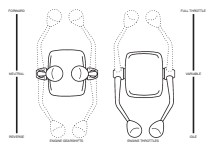

COLD ENGINE - Press Move throttle lever forward to full open throttle, then return to about 1/4 throttle. In cold weather, it may be necessary to pump lever several times before engine will start.

WARM ENGINE - Move throttle lever about 1/4 open throttle position. Do not pump lever.

FLOODED ENGINE - Move throttle lever to full open position. DO NOT pump lever. When the engine starts, move throttle lever back rapidly to decrease engine speed to between 1000 and 1500 RPM.

8. TO START ENGINE:

Turn ON ignition key(s) on the DC distribution panel located in the salon.

(FIG. 3.5.2)

9. For DTS System, press and release the ignition switch. For non-DTS system, press and hold engine START switch on ignition switch panel until engine starts. Do not crank engine for more than a few seconds if it doesn't start. Engine may be very cold or flooded: see step 7.

10. After engine starts, reduce speed to between 1000 and 1500 RPM and check oil pressure.

11. If oil pressure is correct, let engine warm up to normal temperature range as specified in the engine manual, before shifting into forward or reverse gear.

(FIG. 3.5.3)

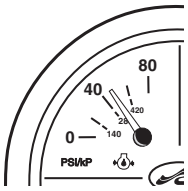

IF OIL PRESSURE GOES ABOVE OR BELOW OPERATING RANGE SHUT DOWN THE ENGINE IMMEDIATELY. GET TRAINED HELP TO FIND AND FIX THE PROBLEM.

12. Check water temperature to ensure temperature range remains normal.

(FIG. 3.5.4)

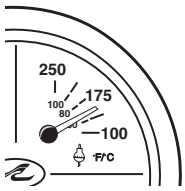

IF ENGINE TEMPERATURE GOES ABOVE NORMAL RANGE SHUT DOWN THE ENGINE IMMEDIATELY. GET TRAINED HELP TO FIND AND FIX THE PROBLEM.

7. SHIFTING TO DRIVE THE BOAT

Bring the throttle lever back to idle position.

(FIG. 3.5.5)

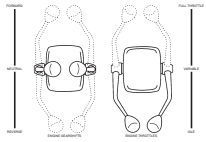

Then move shift lever rapidly, either forward or reverse. The drive unit will engage and boat will start to move slowly in either forward or reverse. You can damage the transmission if you do not shift quickly from neutral into gear. Once clear of the dock, mooring, people and/or the no-wake zone and the boat has been shifted into forward gear, move throttle lever forward to desired engine speed.

⚠ CAUTION

Cockpit can fill with water if boat is moving forward, when it is put into reverse.

Before shifting into reverse, shift to neutral, wait for the boat to stop moving forward, then shift into reverse.

8. STOPPING THE ENGINE

(FIG. 3.6.1)

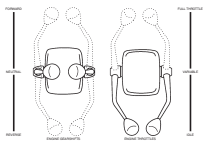

1. Move throttle lever to IDLE and the shift lever to NEUTRAL and let engine idle for about 5 minutes to allow engine to cool down.

2. Press ENGINE STOP switch(es) on the Ignition switch panel.

(FIG. 3.6.2)

3. Turn OFF ignition key(s) on the DC distribution panel.

(FIG. 3.6.3)

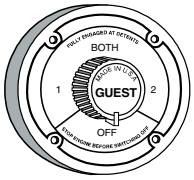

4. If you are leaving the boat for more than two hours, turn OFF battery switch.

9. STEERING SYSTEM

A. POWER ASSISTED (STERN DRIVES)

The steering system on boats with stern drive engines is an enclosed push-pull cable that is hydraulically assisted (power steering) at the stern drive end (Fig. 3.6.4 & 3.6.5). THE CABLE AND ITS CONNECTIONS TO THE STEERING WHEEL AND TO THE OUT DRIVE MUST BE INSPECTED AT LEAST TWICE A YEAR BY YOUR SEA RAY DEALER. See Section 8 of this manual for inspection, service and maintenance recommendations.

⚠ WARNING

Failure of the steering system will cause loss of control of your boat. Any change in steering such as looseness, tightness, binding, etc., must be checked immediately by your Sea Ray dealer.

The power steering pump (Fig. 3.6.5) fluid level MUST be checked every time prior to using the boat. Refer to the steering system information in your Owner's Packet.

POWER STEERING SYSTEM
(FIG. 3.6.4)

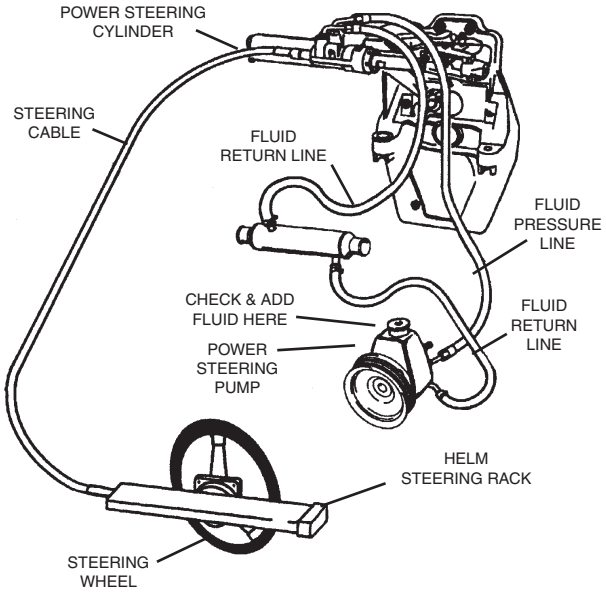

SHIFT, THROTTLE & STEERING CABLE ROUTING
(FIG. 3.6.5)

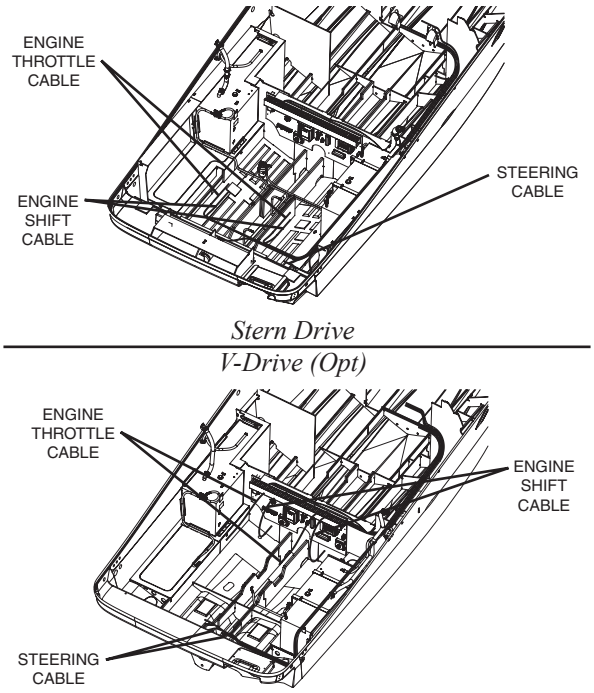

B. HYDRAULIC POWER STEERING (V-DRIVE)

The steering system on boats with v-drive engines is a hydraulic power steering system (Figure 3.7.1). The system uses the boat's engines to provide the "power" for the steering system, via a mechanical or electrical motor driven hydraulic pump.

A manual hydraulic steering system, consisting of a helm and a hydraulic cylinder (fitted with an integral servo cylinder and a power steering valve), supplies the "control" portion of the steering system.

Under normal conditions, with engines running, a hydraulic oil supply is in a standby mode, ready to be directed to the steering cylinder as dictated by the steering wheel, servo cylinder and power steering valve. Turning the steering wheel left or right makes the system go from "standby" into "operating" mode and move the steering cylinder accordingly.

In the event of a power source failure, hydraulic oil from the steering helm is automatically diverted into the servo and steering cylinder, providing the helmsman with manual backup steering.

An engine room mounted oil reservoir allows easy fill and assists the in-line cooler in cooling the hydraulic oil. An in-line oil filter helps to protect the steering system components against contaminants.

TYPICAL HYDRAULIC POWER STEERING ASSEMBLY (FIG. 3.7.1)

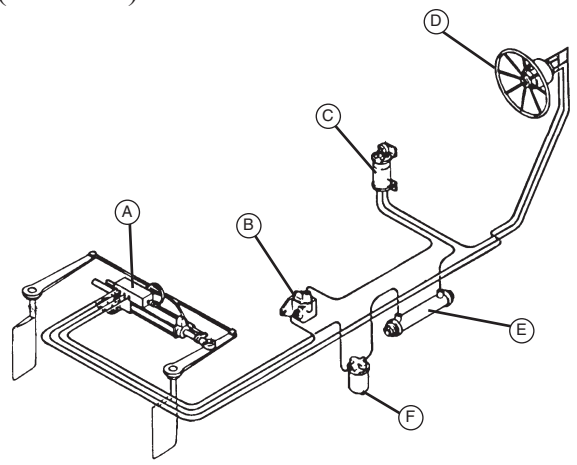

Ⓐ STEERING CYLINDER
Ⓑ PUMP
Ⓒ OIL RESERVOIR
Ⓓ HELM
Ⓔ OIL COOLER
Ⓕ OIL FILTER

REFER TO OWNER'S MANUAL PACKET FOR INSTRUCTIONS AND WARRANTY INFORMATION.

10. STARTING THE GENERATOR

NOTICE

Pre-start generator prior to getting underway as there is a possibility that it will not pick up water if started underway. Make sure the MAIN GENERATOR breaker is OFF and there is no load on the generator before starting it.

Sea Ray® strongly urges you to fully comply with the manual provided by the generator manufacturer. The generator is warranted separately by the generator manufacturer, NOT Sea Ray®. Follow the recommended maintenance and warranty schedule in your Generator Operator's Manual included in the Owner's Manual Packet. Generator abuse or improper maintenance may adversely affect claims made under generator manufacturer separate warranty.

⚠ WARNING

DO NOT run the engine or generator in an enclosed area, such as a closed boat house, as there is the possibility of buildup and inhaling of carbon monoxide.

(Remote control switches are located on the main distribution panel or local switches on the generator.)

1. Check fuel tank levels.

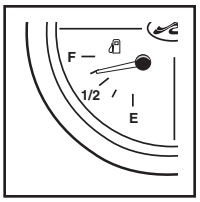

2. Check oil and coolant levels. See Generator Operator's Manual for proper readings.

3. Check generator for coolant drain plug installation.

4. Open the generator seacock.

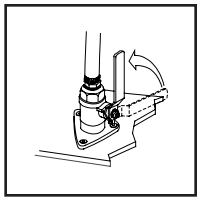

5. Run the bilge blowers for at least four minutes before starting and continuously any time the generator is running. **If fuel fumes are detected, do not start the generator until the source of fumes is determined and corrected and the bilge area is safely ventilated.**

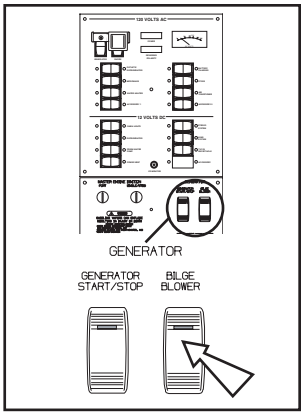

6. Turn ON the battery switch(es), located on the Main DC Breaker Panel under the helm bench seat (See Fig. 6.8.1).

7. Quickly depress and release the top of the generator START/STOP switch; the generator will automatically go through a start up cycle in approximately 4-5 seconds. DO NOT PRESS THE START/STOP SWITCH MORE THAN ONE TIME.

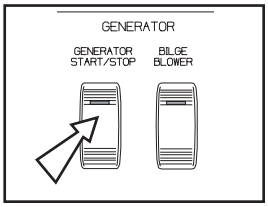

8. Check generator exhaust (port) to verify that water is flowing. If not, shut generator down and refer to your Generator Operator's Manual.

REFER TO THE GENERATOR MANUAL FOR YOUR BOAT IN THE OWNER'S MANUAL PACKET.

11. STOPPING THE GENERATOR

1. Prior to generator shut down turn OFF all AC equipment and breakers including main breakers and allow the generator to run a few minutes to cool down.

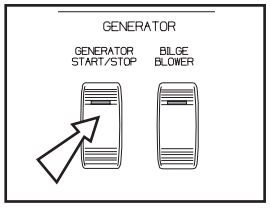

2. Stop the generator by quickly depressing and releasing the START/STOP switch.

REFER TO THE GENERATOR MANUAL FOR YOUR BOAT IN THE OWNER'S MANUAL PACKET.

12. SHORE POWER

A. TO CONNECT AND TURN ON SHORE POWER

1. **<u>On the Boat: Turn OFF All Breakers</u>**

A. Turn OFF equipment breakers

B. Turn OFF SHORE breaker

MAIN DISTRIBUTION PANEL (MDP) (FIG. 3.8.1)

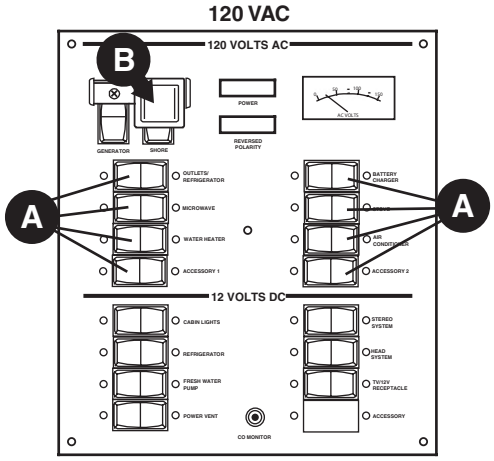

Note: The power panel on your boat may not look exactly like this one.

C. Dry off the shore power cord receptacle on your boat. Dry off the ends of the shore power cord, and spray a moisture repellent into the receptacle and cord ends.
On the boat, plug the cord end into the boat receptacle. Turn clockwise to lock. Thread the locking ring onto the boat receptacle to prevent accidental unplugging.

SHORE POWER RECEPTACLE (FIG. 3.9.1)

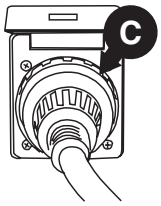

D. The AC Main Shore Power Breaker, located inboard of the shore power receptacle must be ON at all times to operate the shore AC power system.

AC MAIN SHORE POWER BREAKER (FIG. 3.9.2)

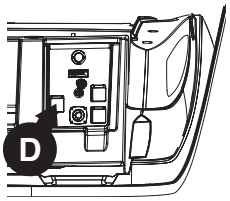

⚠ CAUTION

It is imperative that the shore power outlet is dry before plugging into the dock power inlet.

⚠ CAUTION

Route and tie the power cord from the boat to the dockside power outlet box to prevent persons tripping over it and the cord falling in the water.

⚠ CAUTION

Shore power cord should be secured or routed to avoid laying or falling into water and to avoid stress on shore power plug and inlet.

⚠ CAUTION

The use of extension shore power cords is not recommended. Excessive power cord extensions can cause a voltage drop and may prevent some electronic devices from operating correctly.

2. **On the Dock:**

A. Turn OFF Dock Breaker.

B. Wipe the outlet dry, spray moisture repellent into the receptacle, then plug the other end of the power cord into the outlet box on the dock.

C. Turn ON Dock Breaker.

DOCK POWER BOX (FIG. 3.9.3)

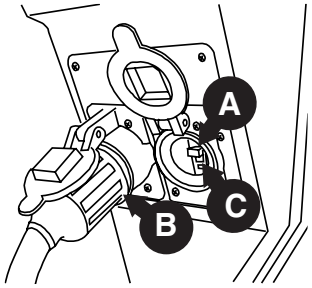

3. **On the Boat:**

A. Turn ON the main AC breaker on the MDP.

MAIN AC BREAKER (FIG. 3.9.4)

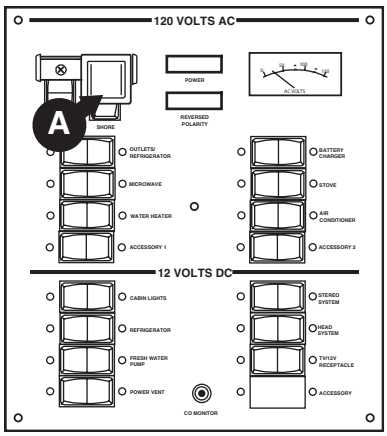

⚠ CAUTION

Do not energize main breaker under reversed polarity conditions.

120 Volt or 220 Volt Main Distribution Panel (MDP):

B. POWER Light ON. REVERSE POLARITY Light OFF.
(If reversed polarity light is on do not turn on breakers, turn OFF MAIN and DOCK breakers. Disconnect power cords. Consult dockmaster.)

Turn ON Breakers:

C. Verify proper voltage.
(120 Volt System: 110V to 125V)
(220 Volt System: 208V to 230V) (International)

D. Turn ON Desired Equipment Breakers.

MAIN DISTRIBUTION PANEL (MDP) (FIG. 3.10.1)

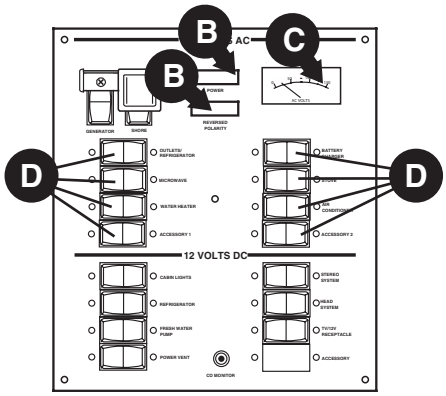

B. TO DISCONNECT SHORE POWER

1. **On the Boat: Turn OFF All Breakers**

MAIN DISTRIBUTION PANEL (MDP) (FIG. 3.10.2)

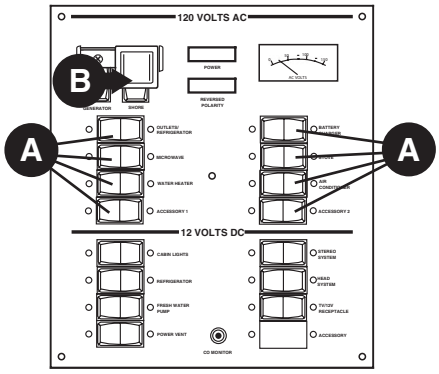

A. Turn OFF equipment breakers.

B. Turn OFF SHORE breaker.

C. On the dock, turn OFF the dockside breaker.

D. Disconnect the dockside end of the power cord.

DOCK POWER BOX (FIG. 3.10.3)

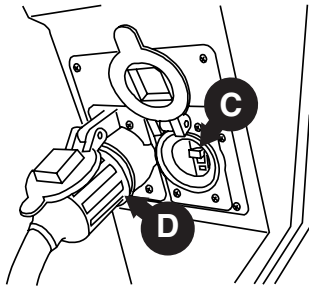

E. On your boat, disconnect the power cord from your boat receptacle.

SHORE POWER RECEPTACLE (FIG. 3.10.4)

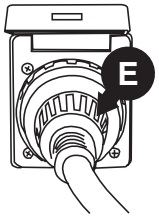

F. Clean the power cord, spray the cord ends with moisture repellent, and store the cord in a dry location on board.

You must keep the shore power cord and the plug ends clean and dry. This is especially necessary if your boat is used in salt water. Always clean and spray your cord ends with moisture repellent before using and before storing the cord.

C. MAINTENANCE FOR SHORE POWER CABLE AND SHORE POWER INLET

⚠ WARNING

Disconnect the power cable from power source before performing maintenance.

The metallic parts of your cable and inlet are made to resist corrosion. In salt water environment, life of the product can be increased by periodically wiping the exposed parts with fresh water, drying and spraying with a moisture repellent.

A soiled cable can be cleaned with grease-cutting household detergent. A periodic application of vinyl protector will help both ends and cable maintain their original appearance.

In case of salt water spray or immersion: Rinse plug end and/or connector end thoroughly in fresh water, shake or blow out excess water and allow to dry. Spray with a moisture repellent before reuse.

THIS PAGE LEFT INTENTIONALLY BLANK

1. BILGE

A. FUEL AND OIL SPILLAGE

Regulations prohibit discharging fuel or oily waste in navigable waters. Discharge is defined as any action which causes a film, sheen or discoloration on the water surface, or causes a sludge or emulsion beneath the water surface. A common violation is bilge discharge. Use rags or sponges to soak up fuel or oily waste, then dispose of them properly ashore. If there is much fuel or oil in the bilge, contact a knowledgeable marine service to remove it. Never pump contaminated bilge water overboard.

Fill fuel tank to less than rated capacity. Allow for fuel expansion.

B. DRAIN PLUG

DANGER

Install and tighten drain plug before launching boat.

Boat will sink if drain plug is not in place and tight.

The bottom of the engine compartment is called the "bilge". It is the lowest and inner part of the hull. Water and other liquids will collect there.

After removing your boat from the water, remove the drain plug to drain the bilge (Fig. 4.1.1).

DRAIN PLUG
(FIG. 4.1.1)

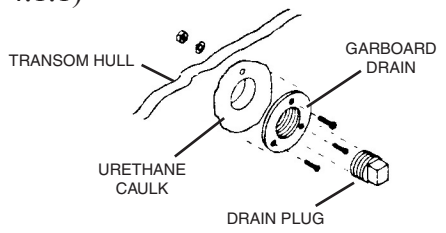

C. BILGE PUMP

WARNING

SINKING HAZARD – Ensure the bilge pumps are operating properly.

CAUTION

Run bilge pumps in the manual position only as long as necessary to remove water. Running bilge pumps dry can damage the pump motor.

A bilge pump and float switch are located in the bottom of the bilge (see Fig. 4.10.1 - 4.12.1). The bilge pump can be manually activated from the switch located on the starboard switch panel at the helm.

Before starting the engine, push up on the bilge pump switch so that the switch light comes ON. Make sure the pump is working by opening the engine compartment, listening to hear the pump running and checking to see that liquid is being pumped out from the bilge pump through hull discharge (See Fig. 2.11.1 or 2.12.1). If the bilge has more liquid than normal, see Maintenance Section for locating and correcting the problem.

Except for checking the operation of the bilge pump by using the ON position, leave the switch in the OFF (AUTO) position. In the OFF (AUTO) position, when the bilge liquid is deep enough to activate the float switch, the bilge pump turns on and pumps out the bilge liquid until the float switch drops and shuts off the pump.

BILGE PUMP AND FLOAT SWITCH
(FIG. 4.1.2)

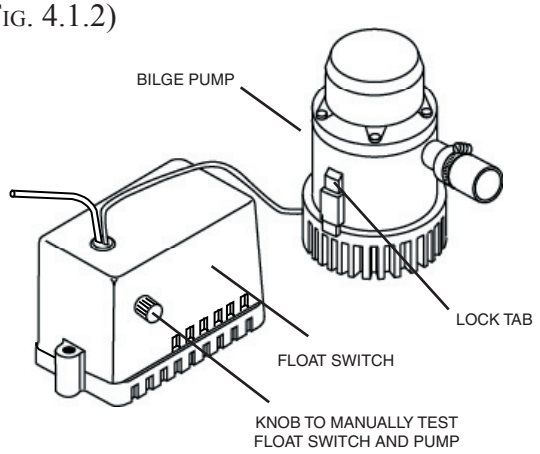

If the liquid level in the bilge is higher than normal and the bilge pump empties the bilge when you use the ON switch, either the breaker for the automatic bilge pump circuit has blown or the float switch is not operating properly. Have it checked immediately. If the ON switch does not operate the pump, DO NOT use the boat until the problem is corrected.

The bilge pump automatic circuit is protected by a breaker on the main DC breaker panel located under helm bench seat (see Fig. 6.8.1). The bilge pump manual circuit is protected by a breaker on the aft EIM located on the bilge component board (see Fig. 6.5.2).

1. Maintenance

Frequently inspect the area under the float switch to ensure it is free from debris and gummy bilge oil. To clean, soak in heavy duty bilge cleaner for 10 minutes, agitating several times. Check for unrestricted operation of the float. Repeat the cleaning procedure if necessary.

Inspect the bilge pump intake and keep it free of dirt or material which may impede the flow of water through the pump. To clean the pump strainer, depress the lock tabs on both sides of the pump and lift the pump motor.

Troubleshooting:

If water does not come out of discharge hose:

1. Check the "BILGE PUMP" breaker on main DC Breaker Panel (see Fig. 6.8.1) to ensure it has not been tripped.
2. Remove the motor module to see if the impeller rotates with the power on.
3. Remove any debris that may have accumulated in the nozzle section or strainer base.
4. Check hose and connection on hull side for debris and proper connections.

D. Bilge Blower

To prevent buildup of gasoline fumes to the explosive level in the engine compartment, the bilge blower must be run for at least four (4) minutes before starting the engine and kept running at all times when the engine is running to ensure that there will be adequate ventilation when you are moving slowly.

⚠ WARNING

Do not allow obstructions to interfere with bilge blower or ventilation intake operation. Engine performance may be adversely affected.

Bilge Blower
(Fig. 4.2.1)

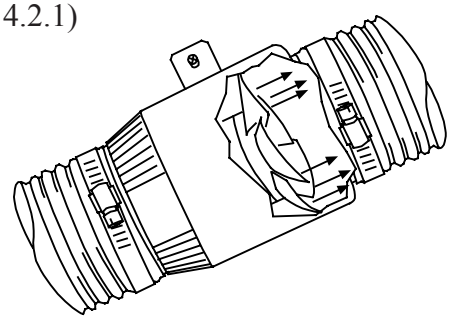

The bilge blower is protected by a breaker on the aft EIM located on the bilge component board (see Fig. 6.5.2).

⚠ WARNING

EXPLOSION/FIRE HAZARD – Run blower at least four (4) minutes before starting engine or generator. Check bilge and engine compartment for fumes.

BLOWER LOCATION AND HOSE ROUTING (SINGLE ENGINE)
(FIG. 4.3.1)

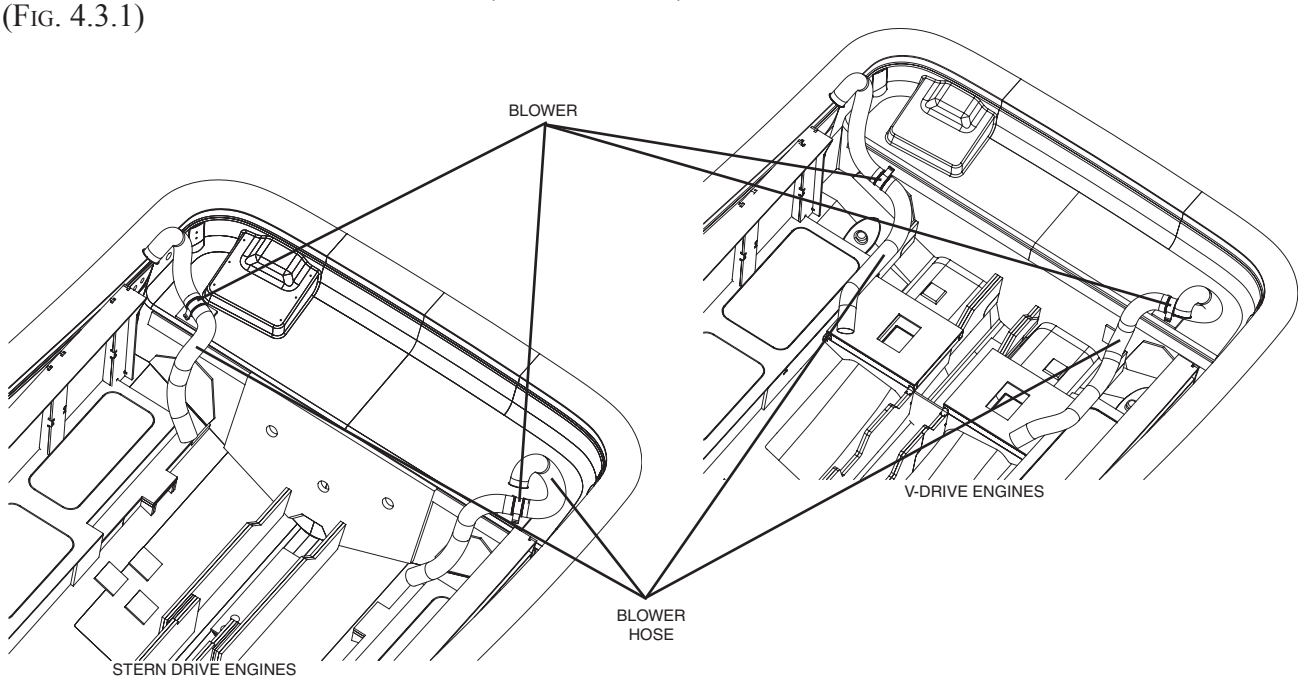

2. ENGINE AND STERN DRIVE

A. MAINTENANCE AND SERVICE

Engine failure away from shore can be dangerous. You must follow the recommended maintenance schedule to best ensure trouble-free operation of your engine and stern drive.

B. VIBRATION AND CAUSES

Some vibration is to be expected in your boat because of the action of the engines and the propeller. But excessive vibration indicates conditions which must be promptly corrected to avoid damage. The following are some conditions which may cause vibrations:

- Weeds, ropes, fishing lines, nets or your own trailing lines can become wrapped around the propeller and/or shaft, causing vibration and loss of speed. Always stop the boat, make sure it is clear to the rear, and then reverse the propeller after going through a weedy area to unwrap and clear away any weeds which may have accumulated. If this doesn't clear the entanglement, and you can't anchor or moor the boat in shallow water to get to the stern drive in the water, the boat will have to be taken out of the water.
- A badly damaged or distorted propeller or shaft is an obvious cause of vibration. Run at slow speed to shore. REPLACE IMMEDIATELY.
- If the engine mounts fail and the engine can contact the hull while it is running, vibration will be felt. Run at slow speed to shore. REPLACE IMMEDIATELY.

C. IMPACT TO STERN DRIVE

The stern drive can be damaged by impact, either while trailering or boating. To minimize the possibility of impact damage while trailering, keep the stern drive raised to the trailering position.

The hydraulic system used to raise and lower the stern drive can cushion impact and lessen damage from head-on impacts to the stern drive from underwater objects BUT ONLY when the boat is moving forward. There is no protection if the stern drive is struck during reverse operation or from an angle when moving forward.

If you strike a submerged object, STOP THE ENGINE as soon as possible and examine the stern drive unit for damage. Even if no damage is visible, there could be internal problems or difficulty maneuvering. If you must use the boat after impact, run at the lowest speed possible.

3. UNDERWATER GEAR

A. PROPELLERS GENERAL INFORMATION

Propellers should be free of nicks, excessive pitting and any distortions that alter them from their original design. Badly damaged propellers should be replaced, but those that are chipped, bent or merely knocked out of shape can be reconditioned by your marine dealer.

When doing extensive cruising, it is advisable to carry extra propellers aboard.

BASIC PROPELLER CHARACTERISTICS

Propellers have two basic characteristics:

- Diameter
- Pitch.

Diameter is that distance measured across the propeller hub line from the outer edge of the 360° that is made by the propeller's blade during a single rotation. Pitch is that distance in inches that a propeller will travel if rotated one revolution without any slippage (Fig. 4.4.1).

PROPELLER PITCH AND DIAMETER (FIG. 4.4.1)

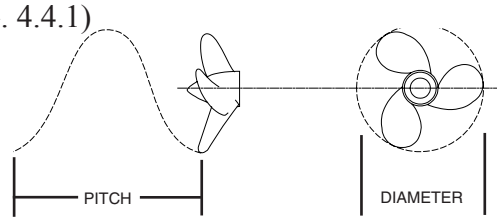

For example, a propeller with a 12-inch pitch, when rotated 360° would, theoretically, advance 12 inches through the water. Actually, no propeller applied to any boat is 100% efficient. No 12-inch pitch blade will, in a single rotation, advance a boat 12 inches. This variance is referred to as slippage.

VENTILATION, ITS' CAUSES AND CORRECTIONS

While often called "cavitation," ventilation is really a different effect. At times when a boat enters or leaves a sharp turn, the propeller seems to slip and lose thrust and the engine may over-speed (Fig. 4.4.2). This problem is normally caused by air or aerated water entering the propeller. (A damaged propeller can also cause ventilation.) Ventilation can usually be corrected by one or more of the following:

1. Replace the damaged or incorrect propeller with the recommended one.

PROPELLER VENTILATION (FIG. 4.4.2)

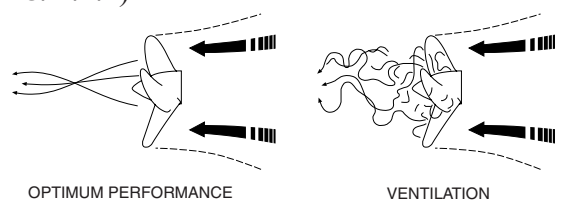

2. With stern drives, set the outdrive at a lesser trim angle (trim the unit downward).

CAVITATION, ITS' CAUSES AND CORRECTIONS

Cavitation is a phenomenon that occurs in all propeller-driven craft under certain conditions. The surface of propeller blades are not perfectly flat, and as water is drawn through the blades to be discharged aft into the propeller's slip stream, the water flowing over the curved surface of the blade encounters areas of greater and less pressure.

In those areas of reduced pressure, air bubbles are formed. When they move out of the low pressure area these bubbles collapse. If they collapse while in contact with an object, such as part of the propeller blade or trim plane, the bubbles create such highly localized forces that they erode the surface of the object. In the case of the propeller, such damage is sometimes called a "burn." It may be caused by an irregularity in the propeller's leading edge, and it should be corrected by reconditioning the propeller or by replacement.

Cavitation is a normal occurrence in modern sport boats, and prop inspection should be part of routine maintenance.

PROPELLER TORQUE AND ITS' CORRECTION

Some of the more powerful motors create a considerable torque effect; that is, a twisting motion causing the boat to ride with one sheer lower than the other. This twisting reaction is caused by the direction of propeller rotation lifting one side of the boat. This causes an uneven drag, so that a boat's bow may tend to fall off in one direction or the other from the intended course given by the wheel.

Torque action may occur when maximum or close to maximum rated horsepower is applied. Any slight torque may be offset by shifting passenger or gear weight laterally to the high side of the boat.

COUNTER-ROTATING PROPELLERS

On twin engine yachts, one propeller turns in a clockwise direction while the other turns counterclockwise in order to maintain a straight course through the water.

COUNTER-ROTATING PROPELLERS
(FIG. 4.5.1)

When removing or replacing propellers, be sure to install the correct propeller on the correct drive.

B. PROPELLER SELECTION

IMPORTANT: Installed propeller must allow engine to operate at its specified maximum WOT (wide open throttle) RPM. Use an accurate service tachometer to verify engine operating RPM.

It is the responsibility of the boat manufacturer and/or the selling dealer to equip the power package with the correct propeller. Refer to Quicksilver publication - *Everything You Need To Know About Propellers P/N 90-8614492*. Specified engine WOT and operating RPM range are listed in the *Mercury MerCruiser Operation, Maintenance and Warranty Manual* attached to the engine.

If full throttle operation is below the recommended range, the propeller must be changed to prevent loss of performance and possible engine damage. On the other hand, operating an engine above the recommended operating RPM range will cause higher than normal wear and/or damage.

After initial propeller selection, the following common problems may require that the propeller be changed to a lower pitch:

- Warmer weather and greater humidity cause an RPM loss.
- Operating in a higher elevation causes an RPM loss.
- Operating with increased load (additional passengers, pulling skiers, etc.).

For better acceleration, such as is needed for water skiing, use the next lower pitch propeller. However, do NOT operate at full throttle when using the lower pitch propeller but not pulling skiers.

Because of the many variables of boat design, only testing will determine the best propeller for a particular application. Available propellers are listed in the *Mercury Precision Parts / Quicksilver Accessories Guide*.

⚠ WARNING

If engine is started during propeller maintenance, serious personal injury can occur.

Shut off engine, remove key, shift into neutral, and put tape over ignition switch key slot.

C. PROPELLER REMOVAL AND INSTALLATION

1. STERN DRIVE

1. Shut off engine, remove key, shift into neutral and put tape over ignition switch key slot.

IMPORTANT: Correct rotation propeller MUST match direction or rotation of propeller shaft.

2. Remove Propeller shaft anode and rear prop nut. Pull the propeller straight off the shaft. Remove the rear thrust washer that is behind the rear propeller.

⚠ WARNING

Place a block of wood between the anti-ventilation plate and propeller to protect hands from propeller blades and to prevent propeller from turning when tightening propeller nut.

PROPELLER PARTS
(FIG. 4.6.1)

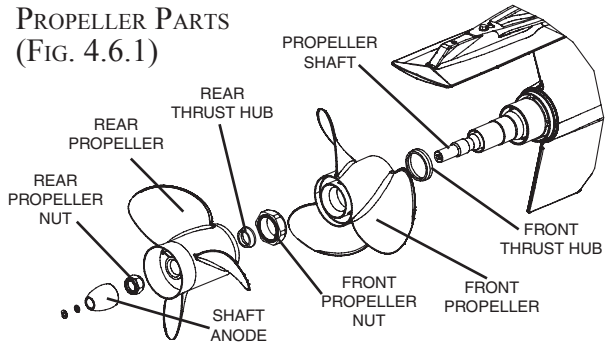

If the propeller is seized to the shaft and cannot be removed by hand, special tools are needed. Have the propeller removed by an authorized dealer or trained mechanic.

3. Remove the front prop nut, propeller and thrust washer in the same manner.

4. Coat the propeller shaft with an anti-seize lubricant.

5. Slide front thrust hub onto propeller shaft, with tapered side toward propeller hub.

6. Align splines and place front propeller on propeller shaft.

7. Install front prop nut and torque. (Refer to drive owners manual for specific torque value.)

8. Install rear thrust hub, propeller and nut in same manner.

9. Install propeller shaft anode.

2. V-DRIVE

For proper rotation, the installation of propellers on inboard engine boats requires the right hand propeller to be installed on the starboard side and the left hand propeller to be installed on the port side. Install in the following manner:

PROPELLER INSTALLATION
(FIG. 4.6.2)

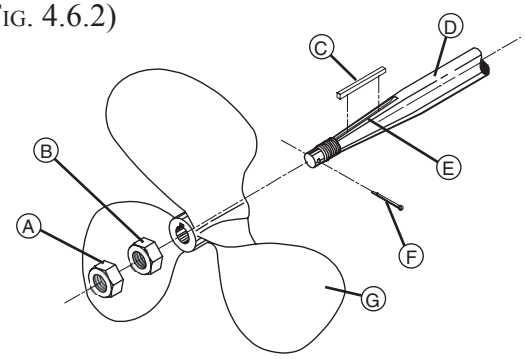

Ⓐ JAM NUT
Ⓑ PROP NUT
Ⓒ KEY
Ⓓ SHAFT
Ⓔ KEYWAY
Ⓕ COTTER PIN
Ⓖ PROPELLER

1. Inspect shafts and propellers to ensure the taper, keyways, keys, prop nut, jam nut and cotter pin meet specifications. **Special attention should be paid when confirming key fit. Key must fit snug in prop hub and propeller shaft. Key must fit flat in bottom of both. If the key radius does not match keyseat properly, stress risers and catastrophic failure could occur.**

- Inspect propeller(s) to ensure the bore, diameter and pitch meet specifications for specific engine installation (diameter and pitch are stamped on the side of prop hub).

2. Dry fit the propeller on the taper without the key and mark the position on the shaft with a permanent marker. **The distance between the prop and the strut shall never exceed one (1) shaft diameter.**

PROPELLER INSTALLATION
(FIG. 4.6.3)

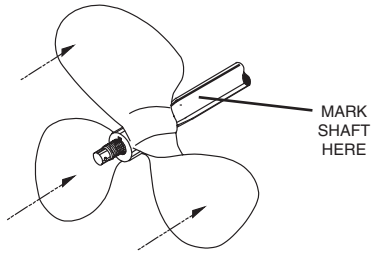

- Remove the propeller and insert the key, rotate the shaft so the key is top dead center.

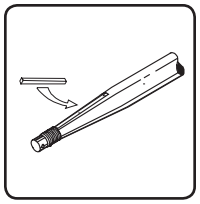

- Using a clean rag, wipe the bore of the propeller with a small amount of penetrating oil.
- Apply a consistent coating of Prussian blue compound to the surface of the shaft taper. The application should be consistent and have a wet film thickness of 2 mils. (similar to a light coat of polyurethane).

Step 3: Set the propeller on the shaft and slide it up the taper with the full nut ensuring that the propeller hub runs up to the mark.

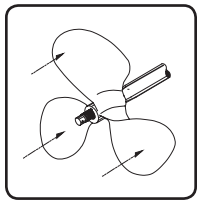

- Remove the propeller and inspect the pattern transferred from the shaft to the bore of the propeller.
- The pattern should be consistent over the full contact area.
- The pattern will not be complete, but it should show a consistent transfer over at least 80 percent of the contact area.
- If the propeller bore shows an area, with little or no transfer, remove the key from the shaft and apply some lapping compound to the shaft.

Step 4: Set the propeller on the taper with the nut set loosely. Rotate the propeller in 60 - 90 degree increments first clockwise, then counterclockwise.

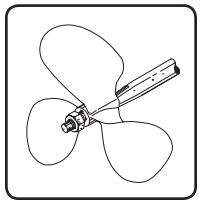

- The propeller will begin to bind as the compound is worked out from between the shaft and propeller. At this stage, clean the shaft taper and propeller bore and repeat the above steps until a transfer showing 80 percent contact is made.

Step 5: Final Installation - apply a light coat of Never Seize® to the shaft taper.

- Set the propeller on the shaft with the key ensuring that the propeller is in full contact and in the proper position on the taper.
- If the propeller is not fitted with a Propsmith® or equivalent, the propeller nut should be used to drive the propeller up the taper.
- Document right hand and left hand prop make/ model installation on the Maintenance Log (Section 8, page 8.15).

Step 6: Install the small propeller nut. Use the slugging wrench making small, but numerous hits on the wrench until the propeller is driven up the taper one quarter (1/4) turn after the nut contacts the propeller.

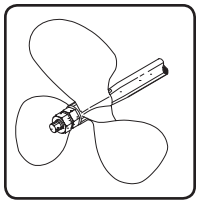

Step 7: Remove the slugger wrench, install the larger nut and tighten one sixth (1/6) turn after nut contacts the small propeller nut, using the slugger wrench and mallet.

- Install the cotter pin and bend each side 180°.

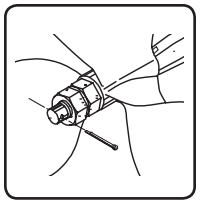

NOTE: Do not use the propeller blades as stops by wedging blocks of wood between the blade and the hull of the boat.

NOTE: The propeller hub may be heated to ease the removal process using a non-oxidizing gas such as propane. The hub should not be heated beyond approximately 150 degrees F.

NOTICE

If the jam nut and prop nut are installed properly, the propeller should not loosen. If you tighten both nuts holding only the propeller blade, the nuts could possibly thread back on the shaft to the cotter pin. It is important that the above procedure be followed.

Shaft Diameter	Thread Size	Prop Nut	Torque Ft. Lbs.	Jam Nut Torque Ft. Lbs.
1"	3/4"	Bronze	100-125	100
1 1/4"	7/8"	Bronze	150-175	100
1 1/2"	1 1/8"	Bronze	250-275	100
1 3/4"	1 1/4"	Bronze	275-300	100
2"	1 1/2"	Bronze	325-350	100
2 1/2"	1 3/4"	Bronze	400-425	100

4. SEACOCKS & STRAINERS

Seacocks and strainers provide cooling water to the optional generator and A/C units located in the bilge area.

To open the seacock, turn the handle in line with water flow (vertically). To close, turn the handle against water flow (horizontally). The strainers should be inspected frequently and cleaned out when plugged. If operation of the air conditioning is excessive it is important that the A/C unit strainer is inspected more frequently than other strainers.

The seacock body should be inspected and lubricated annually.

SEACOCK & STRAINER INSTALLATION (TYPICAL) (FIG. 4.8.1)

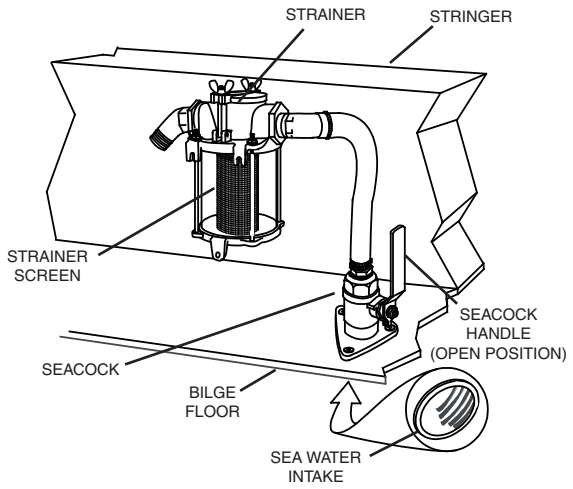

⚠ CAUTION

As a safety measure, close all seacocks when leaving boat for any length of time to impede water ingress in the event of water hose failure.

NOTICE

While being towed, you must close all main engine and generator engine seacocks to prevent water from being forced into the engine's exhaust and causing internal damage.

SEACOCK & STRAINER (FIG. 4.8.2)

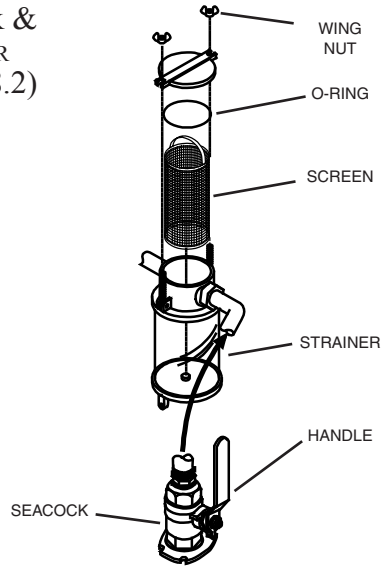

TO CLEAN THE STRAINER

1. Close the seacock by turning the handle against water flow (horizontally).

   NOTE: Some seacocks are equipped with locking tee handles which must be loosened before operating the handle.

2. Loosen wing nuts on top of strainer (Fig. 4.8.2).

STRAINER MAINTENANCE (FIG. 4.8.3)

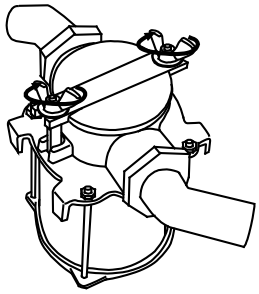

3. Release wing nut from slot in strainer cap by pulling forward (Fig. 4.9.1).

STRAINER MAINTENANCE
(FIG. 4.9.1)

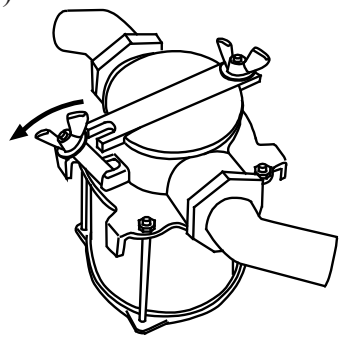

4. Rotate strainer cap clear of strainer housing (Fig. 4.9.2)

STRAINER MAINTENANCE
(FIG. 4.9.2)

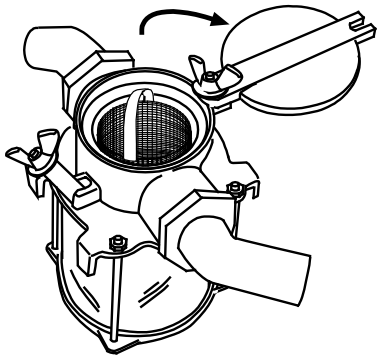

5. Remove and wash stainless steel screen (Fig. 4.9.3)

STRAINER MAINTENANCE
(FIG. 4.9.3)

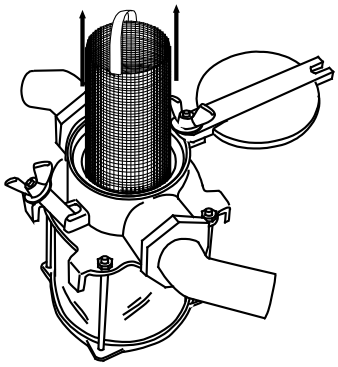

6. Replace the screen, rotate cap into position on the housing, engage wing nut into slot and tighten both wing nuts.
7. Open the seacock by turning the handle with water flow (vertically) and check for leaks.

5. BILGE LAYOUT

BILGE LAYOUT (GAS STERN DRIVE ENGINES)
(FIG. 4.10.1)

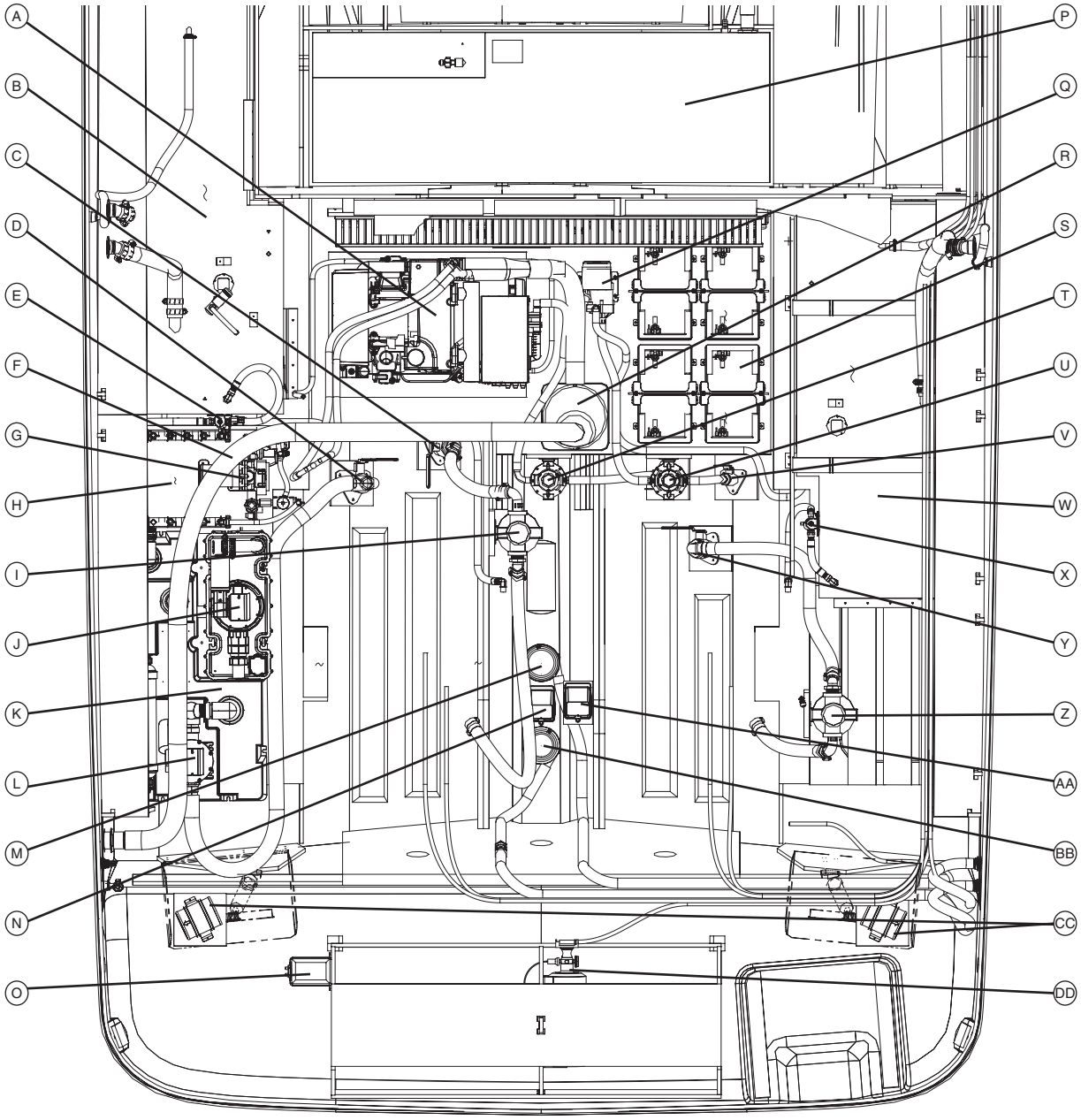

(A) GENERATOR*
(B) PORT FUEL TANK
(C) PORT ENGINE RAW WATER SEACOCK*
(D) WASTE DISCHARGE SEACOCK*
(E) PORT ELECTRONIC SHUT OFF VALVE
(F) GENERATOR EXHAUST*
(G) FRESH WATER PUMP
(H) WATER HEATER
(I) PORT ENGINE STRAINER*
(J) WASTE VACUUM GENERATOR
(K) WASTE WATER HOLDING TANK
(L) MACERATOR*
(M) EMERGENCY HIGH WATER PUMP
(N) BILGE FLOAT SWITCH
(O) TRIM TABS PUMP
(P) FRESH WATER TANK
(Q) A/C PUMP*
(R) GENERATOR MUFFLER*
(S) BATTERIES
(T) GENERATOR STRAINER*
(U) A/C STRAINER*
(V) A/C INTAKE SEACOCK*
(W) STBD FUEL TANK
(X) STBD ELECTRONIC SHUT OFF VALVE
(Y) STBD ENGINE RAW WATER SEACOCK*
(Z) STBD ENGINE STRAINER*
(AA) EMERGENCY HIGH WATER FLOAT SWITCH
(BB) BILGE PUMP
(CC) BILGE BLOWERS
(DD) AUTOMATIC FIRE EXTINGUISHER

*OPTIONAL EQUIPMENT

BILGE LAYOUT (CONT.)

BILGE LAYOUT (DIESEL STERN DRIVE ENGINES)
(FIG. 4.11.1)

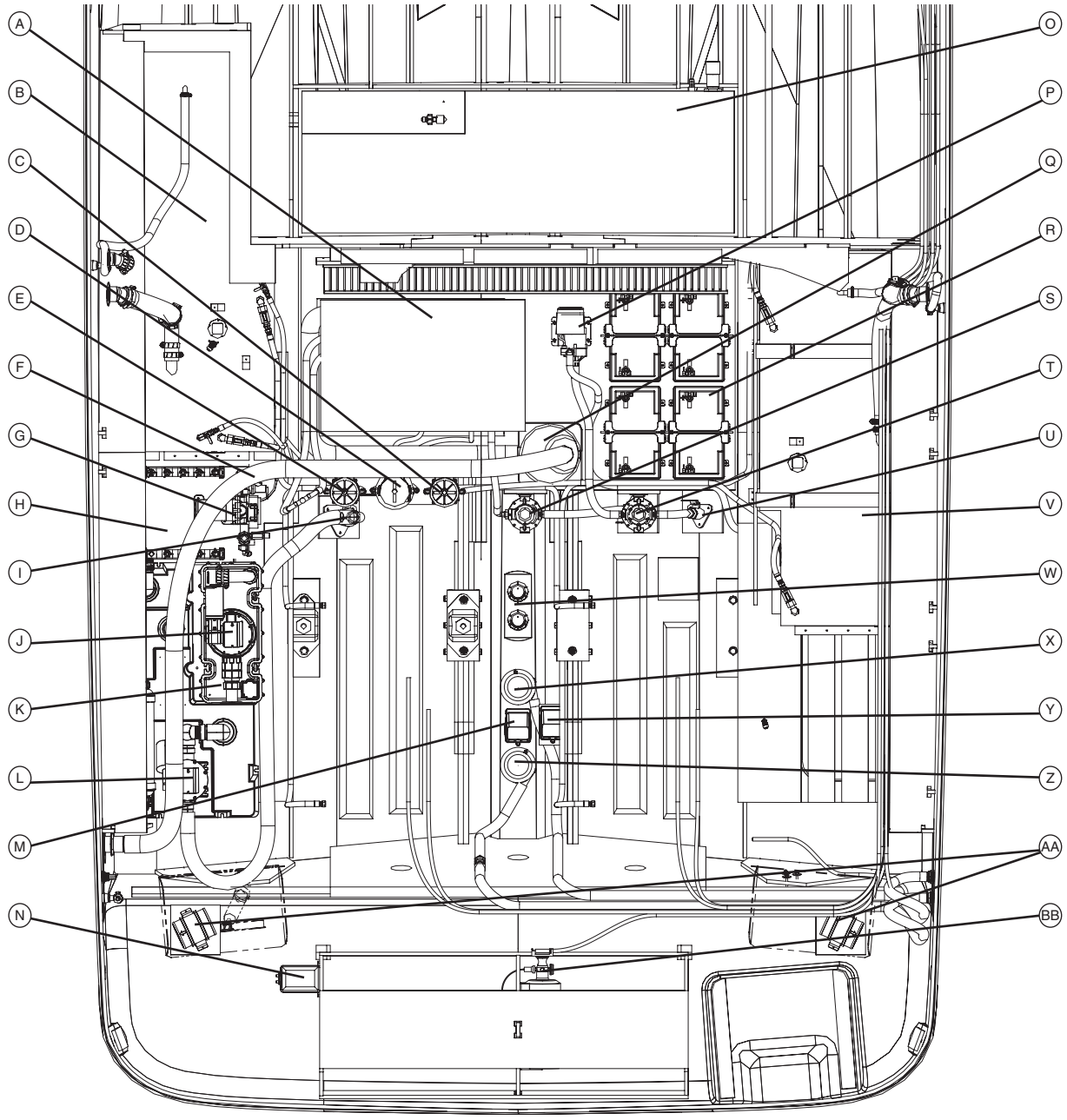

- (A) GENERATOR*
- (B) PORT FUEL TANK
- (C) STBD ENGINE FUEL FILTER
- (D) GENERATOR FUEL FILTER*
- (E) PORT ENGINE FUEL FILTER
- (F) GENERATOR EXHAUST*
- (G) FRESH WATER PUMP
- (H) WATER HEATER
- (I) WASTE DISCHARGE SEACOCK*
- (J) WASTE VACUUM GENERATOR
- (K) WASTE WATER HOLDING TANK
- (L) MACERATOR*
- (M) BILGE PUMP
- (N) TRIM TABS PUMP
- (O) FRESH WATER TANK
- (P) A/C PUMP*
- (Q) GENERATOR MUFFLER*
- (R) BATTERIES
- (S) GENERATOR STRAINER*
- (T) A/C STRAINER*
- (U) A/C INTAKE SEACOCK*
- (V) STBD FUEL TANK
- (W) TRANSDUCERS
- (X) EMERGENCY HIGH WATER PUMP
- (Y) EMERGENCY HIGH WATER FLOAT SWITCH
- (Z) BILGE FLOAT SWITCH
- (AA) BILGE BLOWERS
- (BB) AUTOMATIC FIRE EXTINGUISHER

*OPTIONAL EQUIPMENT

BILGE LAYOUT (CONT.)

BILGE LAYOUT (SINGLE DIESEL ENGINE)
(FIG. 4.12.1)

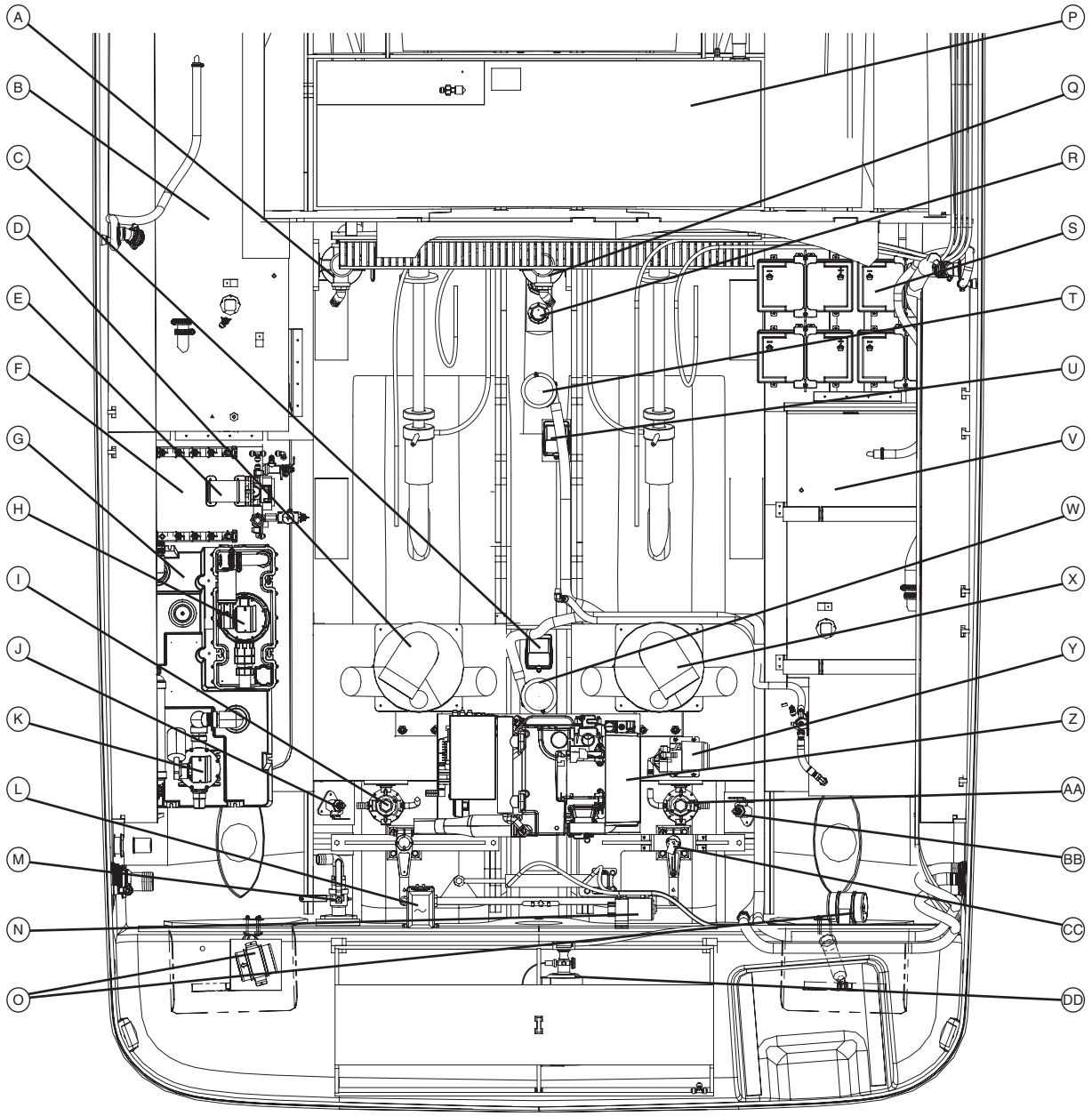

- (A) PORT ENGINE STRAINER*
- (B) PORT FUEL TANK
- (C) BILGE FLOAT SWITCH
- (D) PORT ENGINE MUFFLER
- (E) FRESH WATER PUMP
- (F) WATER HEATER
- (G) WASTE WATER HOLDING TANK
- (H) VACUUM GENERATOR
- (I) GENERATOR STRAINER*
- (J) GENERATOR INTAKE SEACOCK*
- (K) MACERATOR*
- (L) TRIM TABS PUMP
- (M) DISCHARGE SEACOCK*
- (N) AUTO PILOT PUMP*
- (O) BILGE BLOWERS
- (P) FRESH WATER TANK
- (Q) STBD ENGINE STRAINER*
- (R) TRANSDUCERS
- (S) BATTERIES
- (T) EMERGENCY HIGH WATER PUMP
- (U) EMERGENCY HIGH WATER FLOAT SWITCH
- (V) STBD FUEL TANK
- (W) BILGE PUMP
- (X) STBD ENGINE MUFFLER
- (Y) A/C PUMP*
- (Z) GENERATOR*
- (AA) A/C STRAINER*
- (BB) A/C INTAKE SEACOCK*
- (CC) RUDDER POSITION INDICATOR*
- (DD) AUTOMATIC FIRE EXTINGUISHER

*OPTIONAL EQUIPMENT

1. FUEL SYSTEM

Section 3 - Using Your Boat contains important fueling information. Take time to read all the fuel related information in the Owner's Manual.

The 310 Sundancer® standard gasoline fuel system consists of two fuel tanks with a total capacity of 200 gallons (757 liters), fuel tank vents, electric fuel valves, engine fuel supply lines, optional generator fuel supply line, and fuel fills (Fig. 5.1.1 or 5.2.2).

The fuel tank thru hull vents serve as a pressure/vacuum release and safety overflow. Periodically check the vent to ensure that it is not clogged.

The fuel pickup at the fuel tank has an electric fuel valve to prevent fuel from siphoning out in the event of fuel line failure.

⚠ CAUTION

Never start an engine until you are certain that fuel fumes are not present in the engine compartment or elsewhere in the boat.

A. ELECTRIC FUEL VALVE

The electric fuel valve is wired to the ignition switch. When the ignition is turned ON the valve opens, when the ignition is turned OFF the valve closes. The manual override knob on the side of the valve should be left in the NORMAL position at all times.

In the event of an electrical malfunction, the valve can be opened and closed manually by turning the manual override knob.

The electric fuel valve is installed in-line on the fuel hose between the fuel tank and the engine. If your boat is equipped with an optional generator, an additional electric fuel valve will be installed on the fuel hose between the fuel tank and the generator fuel filter.

FUEL SYSTEM (GAS STERN DRIVE - SHOWN WITH GENERATOR OPTION)
(FIG. 5.1.1)

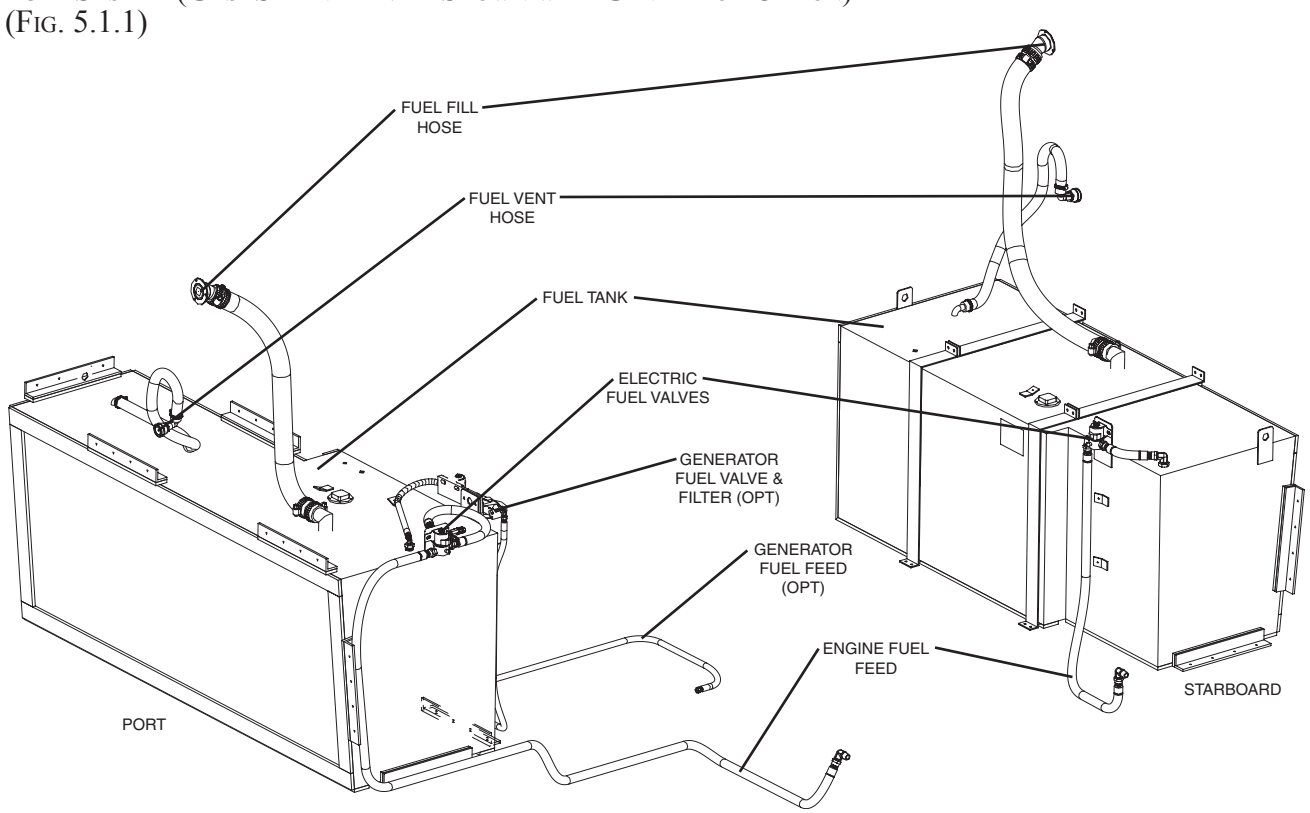

FUEL SYSTEM (DIESEL STERN DRIVE - SHOWN WITH GENERATOR OPTION)
(FIG. 5.2.1)

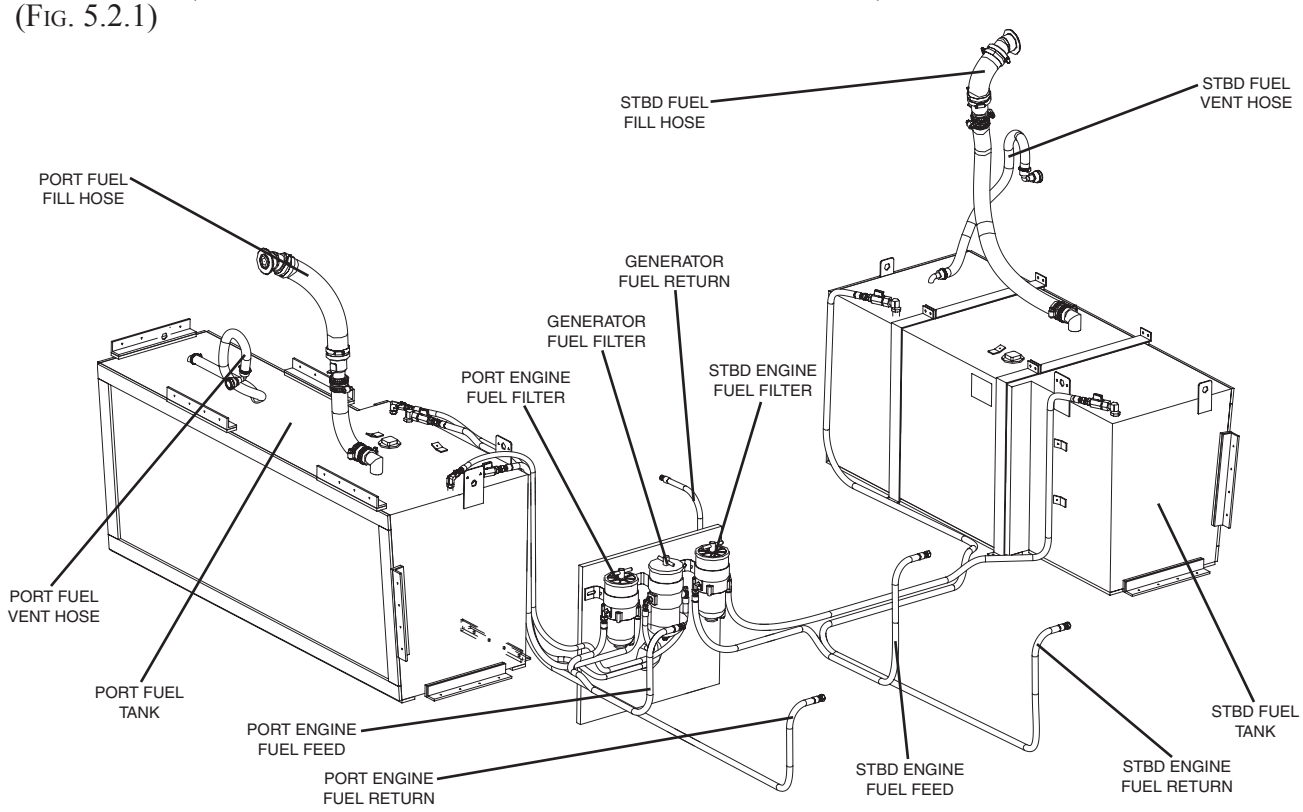

FUEL SYSTEM (GAS V-DRIVE - SHOWN WITH GENERATOR OPTION)
(FIG. 5.2.2)

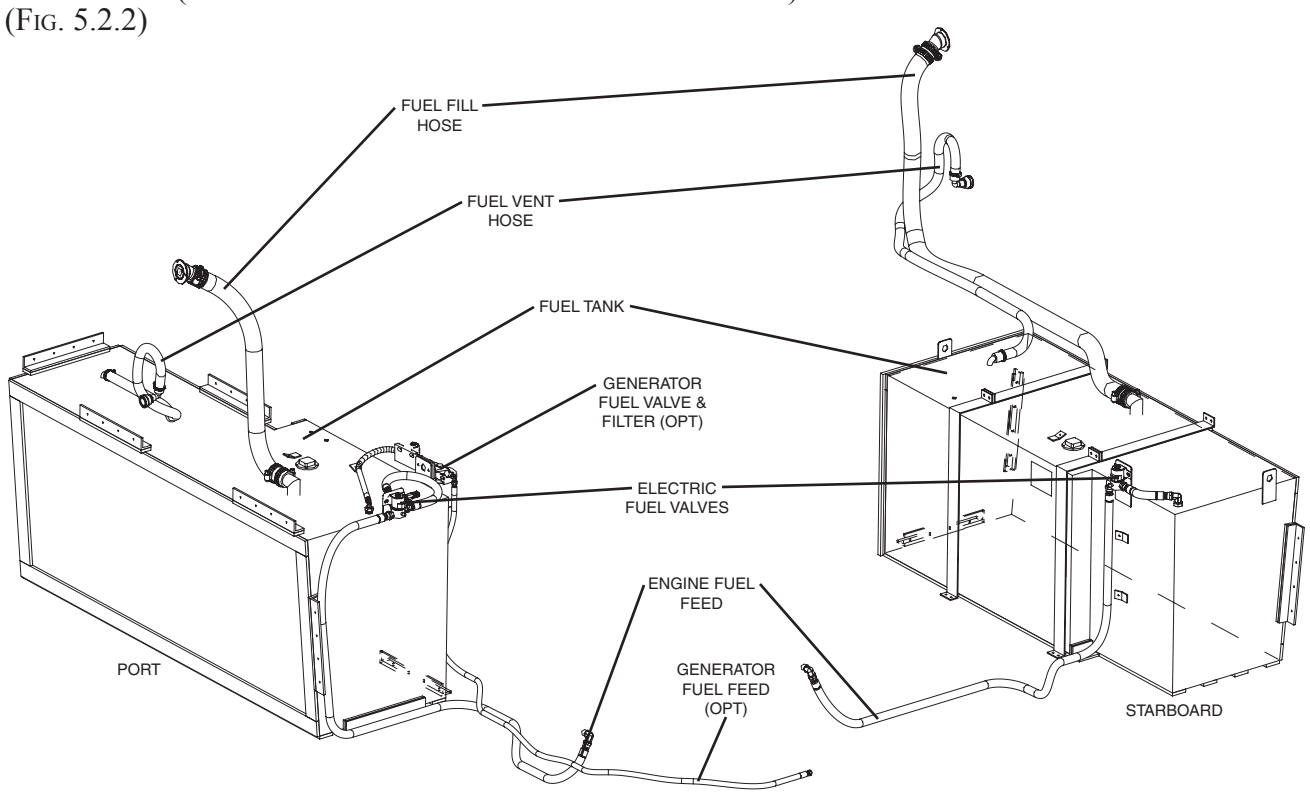

2. DIESEL FUEL SYSTEM (OPTIONAL)

The diesel fuel system consists of two fuel tanks with a total capacity of 200 gallons (757 liters), fuel tank vents, engine fuel supply and return lines, optional generator fuel supply and return lines, fuel filters and fuel fills (Fig. 5.2.1).

A. FUEL FILTER (DIESEL)

Primary and secondary fuel filters are located on your Sea Ray® to help keep the fuel as clean as possible. The primary fuel filter is the Racor® water separating fuel filter installed in the engine compartment (Fig. 5.2.1). The secondary fuel filter is located on the engine and should be replaced in accordance with the Engine Owner's Manual.

NOTE: Use of any methanol, gasohol or alcohol based fuel additive will damage the fuel filter.

REFER TO THE ENGINE OPERATOR'S MANUAL FOR MORE DETAILED INFORMATION.

B. FUEL FILTER MAINTENANCE (DIESEL)

A major cause of poor starting or power loss is the result of a clogged filter element or a fuel system air leak. Check that the filter lid and drain plug are properly tightened.

Inspect or drain the collection bowl of water daily.

1. TO DRAIN WATER:

1. Shut down the engine.
2. Loosen the T handle on the top lid to break the vacuum within the filter (Fig. 5.3.1).
3. With a suitable collection container in place, remove the drain plug and allow water and contaminants to drain. (Fig. 5.3.2).
4. Replace the drain plug and, if necessary, prime the filter by removing the lid (Fig. 5.3.3) and filling the filter with clean fuel.
5. Replace the lid and tighten the lid T handle by hand only. Do not overtighten.

Replace the filter element at regular intervals or if a power loss is detected.

RACOR® FUEL FILTER MAINTENANCE

(FIG. 5.3.1)

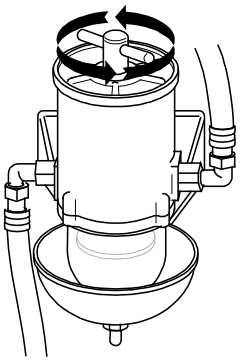

(FIG. 5.3.2)

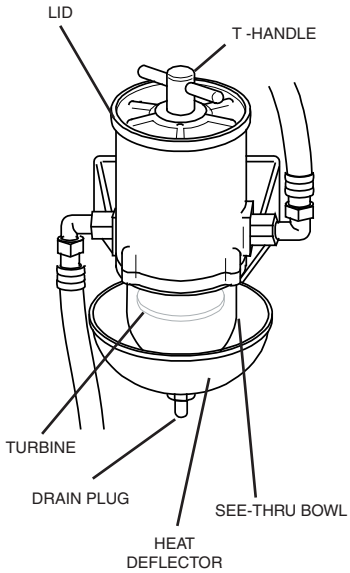

(FIG. 5.3.3)

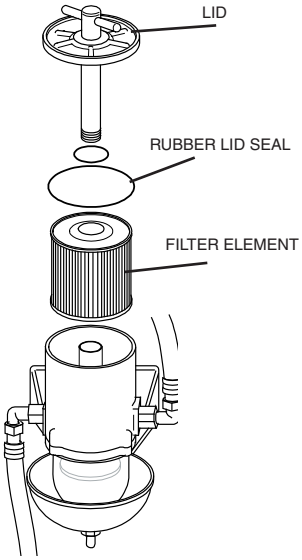

2. TO REPLACE THE FILTER:

1. Shut down the engine.
2. Remove the lid .
3. Remove the old rubber lid seal and dispose of the old seal properly.
4. Apply a coating of clean fuel or motor oil to the rubber lid seal supplied with the new element.
5. Place the new seal in position on the lid.
6. Remove the filter element by holding the molded handle and slowly pulling upward with a twisting motion.
7. Insert the new filter element with a slow downward twisting motion.
8. Fill the filter with clean fuel, then replace the lid. Tighten the lid T handle by hand only. Do not overtighten.
9. Start the engine and check for any leaks.
10. Correct any leaks with the engine shut down.

It is recommended that spare filter elements be carried aboard as contaminated fuel can easily plug a filter.

REFER TO THE ENGINE OPERATOR'S MANUAL FOR MORE DETAILED INFORMATION.

3. FUELING PRECAUTIONS

Certain precautions must be carefully and completely observed every time a boat is fueled, even with diesel fuel. Diesel fuel is nonexplosive but it will burn.

A. STATIC ELECTRICITY AND THE FUEL SYSTEM

There is a danger that static electricity can ignite gasoline vapors that have not been ventilated outside an enclosed area. Use extreme caution when fueling your boat from a source outside the regular venues, (e.g. marinas, fuel service stations.)

Your boat has safety features that can be circumvented by not adhering to standard fueling practices. Your boat's bonding system protects it from creating and discharging static electricity.

Your boat must be in contact with the water or a land based grounding system. Here are some helpful suggestions to keep you safe from static electricity while refueling your boat.

- NEVER fuel your boat in unsafe conditions such as: suspended on a sling or in a situation that increases the likelihood of static discharge.
- NEVER use homemade containers to fill your fuel tank.
- Fuel carried on board outside of a fixed fuel system should be stored in an approved container or in a portable tank such as provided for outboard engines and be stowed safely outside of the engine or living compartments.
- Shutdown the engine, motors and fans prior to taking on fuel. Any ignition sources should be extinguished before filling the fuel tank.
- Close all ports, windows, doors, and hatches.
- Fueling should never be done at night except in well-lighted areas.
- Always keep the fuel nozzle in contact with the fuel fill plate or the edge of the fuel tank opening throughout the filling process.
- Allow areas where gasoline vapors could collect to be ventilated before starting the engine(s).
- Wipe any spillage completely and dispose of rags or waste on shore.
- Secure the fill cap tightly.
- Fuel tank should never be filled to capacity. Allow for fuel expansion.
- Portable tanks should only be filled while on the ground; never on board the boat.

B. GENERAL:

- Check fill plate label to ensure fuel is placed only in fuel tank. Fuel fill plates are located on the port and starboard mid decks (Fig. 5.5.1).
- Avoid spills.

- Know your fuel capacity and consumption. Record the amount of fuel used since your last fill up, and compute the engine's hourly fuel usage. As a fuel gauge backup check, deduct the average hourly fuel usage from fuel tank capacity.
- Observe the "Rule of Thirds": one-third fuel for trip out, one-third for return and one-third for reserve.
- Allow an additional 15 percent fuel reserve when operating in rough seas.

C. Before and During Fueling Checklist:

- Fire extinguisher – close at hand.
- Mooring – boat tied securely to fueling pier.
- Crew – at least one knowledgeable person present.
- Passengers – unnecessary people off the boat.
- Engines – stopped.
- Electrical equipment, including blowers – power off.
- Windows, doors, hatches – closed.
- Smoking material – extinguished.
- Inboard tanks – grounded.
- Filler pipe – marked GAS or DIESEL.
- Fuel nozzle – in contact with filler pipe to prevent static sparks.
- Fill level – fill less than rated capacity of tank; allow for fuel expansion.
- Trim – fuel weight distributed equally.

D. After Fueling Checklist:

- Windows, doors, hatches – open.
- Sniff test – if fuel fumes remain, operate blowers until fumes are gone.
- Fuel tank – secure filler cap.
- Spills – wipe; dispose of rags ashore.

Fuel Fill Location
(Fig. 5.5.1)

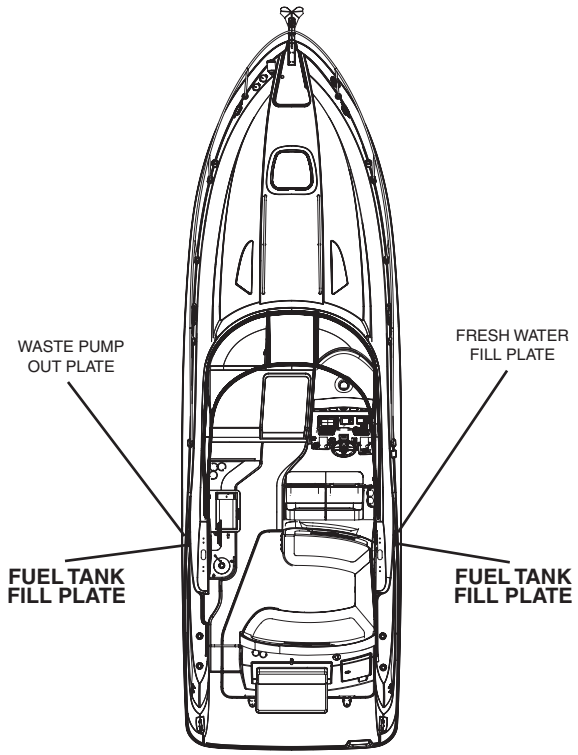

4. FUEL RECOMMENDATIONS

⚠ CAUTION

Never start an engine until you are certain that fuel fumes are not present in the engine compartment or elsewhere in the boat.

The quality of the fuel is very important for satisfactory engine performance and long engine life. Care should be taken to select fuels having the octane rating recommended for the engine, as indicated in the owner's manual, for proper operation. Fuel should be clean and free of contamination. Your fuel tanks should be kept full of fuel whenever possible. This will reduce the amount of water condensation and reduce the possibility of contamination.

NOTICE

GASOLINE RECOMMENDATIONS

Minimum octane rating of 87 AKI.

The use of improper gasoline or additives can damage your fuel system and is considered misuse of the system. Damage caused by improper gasoline or additives WILL NOT be covered under warranty.

ETHANOL-BLENDED FUELS

Ethanol is an oxygenated hydrocarbon compound that has a high octane rating and therefore is useful in increasing the octane level of unleaded gasoline.

The fuel-system components of your Mercury engine(s) have been tested to perform with the maximum level of ethanol blended gasoline (10% ethanol) currently allowed by the EPA in the United States.

Special precautions should be considered with the use of fuel containing ethanol in your system. Fuels with ethanol can attack some fuel-system components, such as tanks and lines, if they are not made from acceptable ethanol compatible materials. This can lead to operational problems or safety issues such as clogged filters, leaks or engine damage.

Your boat was manufactured, and shipped from the factory, with ethanol-compatible materials. Before introducing gasoline with ethanol into your fuel tank, ask your dealer if any components have been added or replaced that are not recommended by Sea Ray, Mercury or may not be ethanol-compatible.

FILLING THE TANK

It is best to maintain a full tank of fuel when the engine is not in use. This will reduce air flow in and out of the tank due to changes in temperature as well as limiting exposure of the ethanol in the fuel to humidity and condensation.

PHASE SEPARATION

Humidity and condensation create water in your fuel tank which can adversely effect the ethanol blended fuel. A condition called phase separation can occur if water is drawn into the fuel beyond the saturation point. The presence of water in the fuel beyond the saturation level will cause most of the ethanol in the fuel to separate from the bulk fuel and drop to the bottom of the tank, significantly reducing the level of ethanol in the fuel mixture in the upper level (phase). If the lower level (phase), consisting of water and ethanol, is deep enough to reach the fuel inlet it could be pumped directly to the engine(s) and cause significant problems. Engine problems can also result from the reduced ethanol/fuel mixture left in the upper phase of the tank.

EXAMPLE OF PHASE SEPARATION (FIG. 5.6.1)

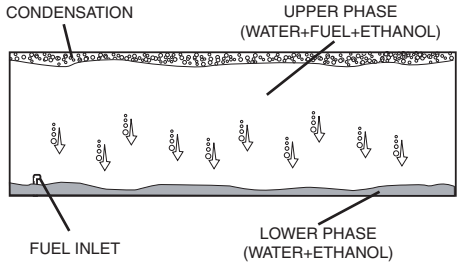

ADDITIVES

There is no practical additive known that can prevent or correct phase separation. The only solution is to keep water from accumulating in the tank.

If phase separation does occur, your only remedy is to drain the fuel, clean and dry the tank completely and refill with a fresh, dry load of fuel.

FUEL FILTERS

Mercury already provides the appropriate level of filtration to protect the engine from debris. The addition of another *in-line* filter to the system will create a possible flow restriction that can starve the engine(s) of fuel.

As a precaution, it is advisable to carry extra *on-engine* filters in case filter plugging from debris in the fuel tank becomes a problem during boating.

MAINTENANCE

Periodically inspect for the presence of water in the fuel tank. If any is found, all water must be removed and the tank completely dried before refilling the tank with any fuel containing ethanol.

STORAGE

Long periods of storage and/or non-use, common to boats, create unique problems. When preparing to store a boat for extended periods, of two months or more, it is best to completely remove all fuel from the tank. If it is not possible to remove the fuel, maintaining a full tank of fuel with a fuel stabilizer added to provide fuel stability and corrosion protection is recommended.

⚠ CAUTION

The use of fuels containing ethanol higher than 10 present (E-10) can damage your engine and/or fuel system and will void the warranty.

E-85 FUELS COULD SERIOUSLY DAMAGE YOUR ENGINES AND MUST NEVER BE USED.

REFER TO THE ENGINE MANUFACTURER'S MANUAL IN YOUR OWNER'S MANUAL PACKET FOR COMPLETE INSTRUCTIONS AND WARRANTY INFORMATION.

THIS PAGE LEFT INTENTIONALLY BLANK

1. DC SYSTEM

A. DIRECT CURRENT (DC)

The 12 volt direct current (DC) electrical system (similar to that in your car or truck) derives its power from the batteries. Batteries are kept charged by the engine-driven alternator or the battery charger/converter which must be powered by shore power. The battery voltage is indicated by the voltmeter on the helm panel (on the SmartCraft™ System Tach) and on the main distribution panel located in the cabin. The negative terminal of the battery is attached to the main negative bus.

Ask your dealer for a careful analysis of DC power needs on your boat. It may be necessary to add batteries or auxiliary charging methods to supply adequate power for any additional accessories you wish to add.

⚠ DANGER

DO NOT USE JUMPER CABLES IN THE ENGINE COMPARTMENT.

They can cause an explosion from sparks.

⚠ DANGER

A battery will explode if a flame or spark ignites the free hydrogen given off during charging.

Never use an open flame or strike sparks in the battery area.

BATTERIES

The batteries installed in your boat have been selected for their ability to furnish starting power based on engine starting requirements, as well as its ability to power the DC accessories attached to the electrical system. See page 6.3 for the recommended batteries for your boat.

⚠ CAUTION

To prevent arcing or damage to the alternator, always disconnect battery cables before doing any work on the engine's electrical system.

To remove the battery cables:

1. Turn off all items drawing power from the battery.
2. Turn the battery switch to the OFF position (Battery switch is optional equipment on some models).
3. Remove the negative cable first, then the positive cable. To replace the cables, first replace the positive cable, then the negative.

BATTERY MAINTENANCE

- Check the fluid levels in the cells approximately every 4 weeks, and weekly in summer and hot zones.
- The fluid level must be between the lower and upper markings.
- Replenish only with distilled water. Do not use metal funnel.
- Coat battery terminal clamps with silicone grease. Keep batteries clean and dry.

Battery life is shortened if it is drained to zero charge before recharging. It is recommended that a battery not be discharged more than 50 percent. If the battery does become run down, recharge it as soon as possible.

Running the engine to recharge the battery may not be effective. The alternator only creates charging power at higher engine speeds, so simply idling or trolling will not generate enough power to recharge the battery.

If you need to charge a battery, use only a battery charger designed to charge automotive/marine batteries. Use charger only when batteries are disconnected from the boat's electrical circuit. Follow the charger instructions.

If the boat is equipped with dockside power and an AC/DC converter/battery charger, keep it on when shore power is available. This will keep the batteries properly charged and allow use of the DC powered equipment on board without draining the battery.

If your boat will not be used for several weeks or more, and there is no shore power hookup, remove the batteries from the boat and connect them to a charger.

BATTERY CABLE ROUTING (STERN DRIVE ENGINES) (FIG. 6.2.1)

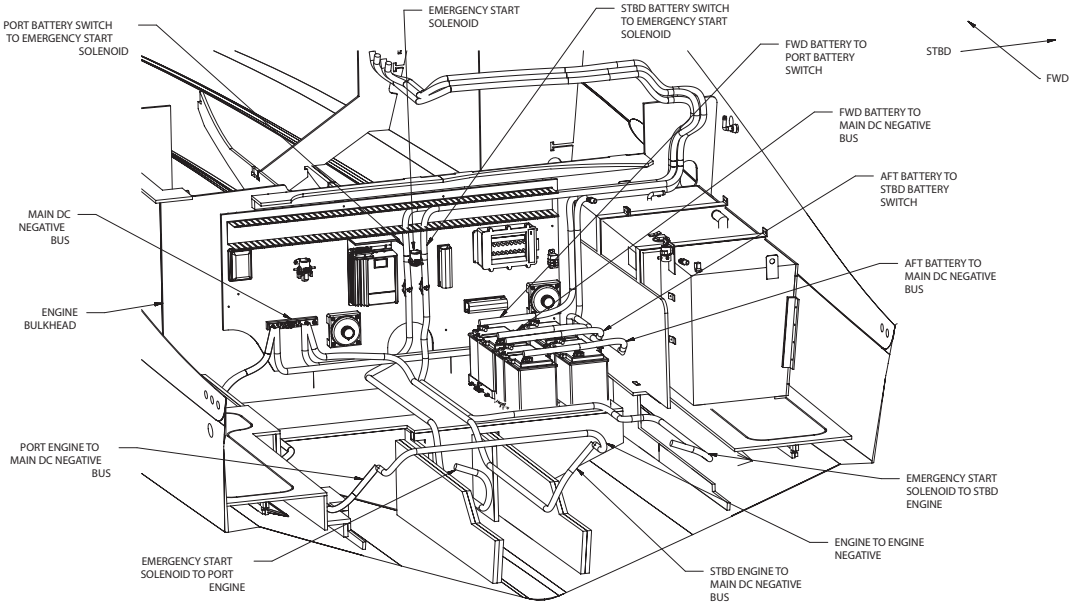

BATTERY CABLE ROUTING (STERN DRIVE ENGINES W/ GENERATOR OPTION) (FIG. 6.2.2)

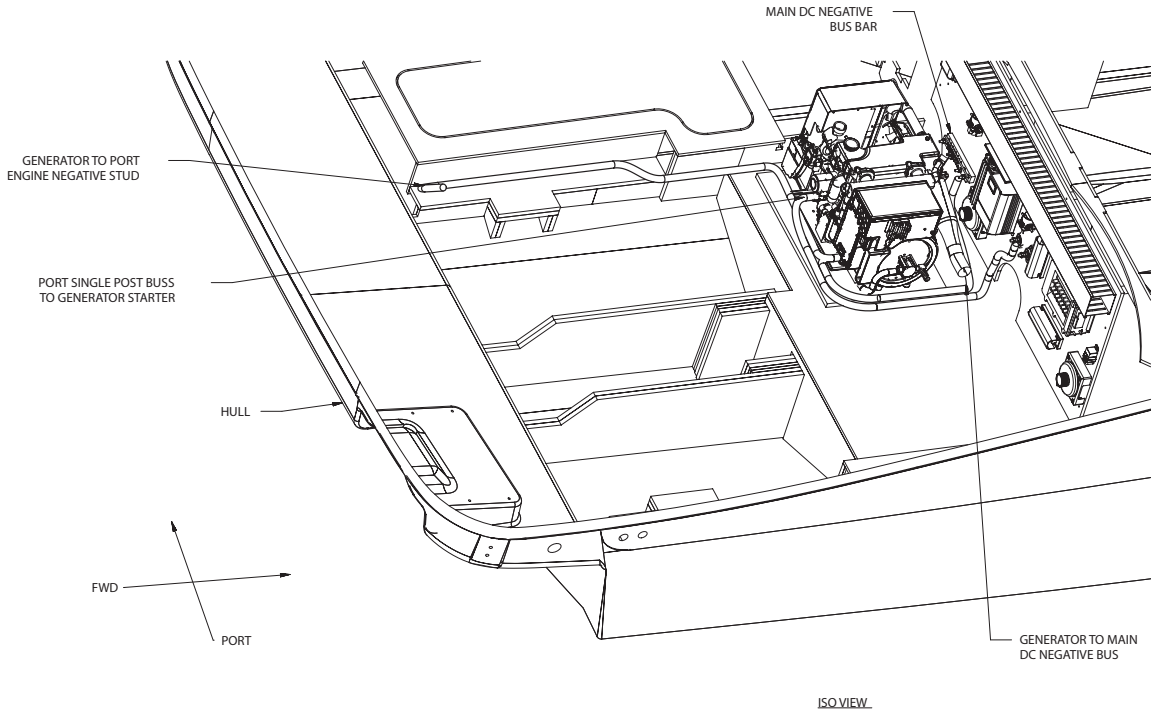

BATTERY CABLE ROUTING (V-DRIVE ENGINES) (FIG. 6.3.1)

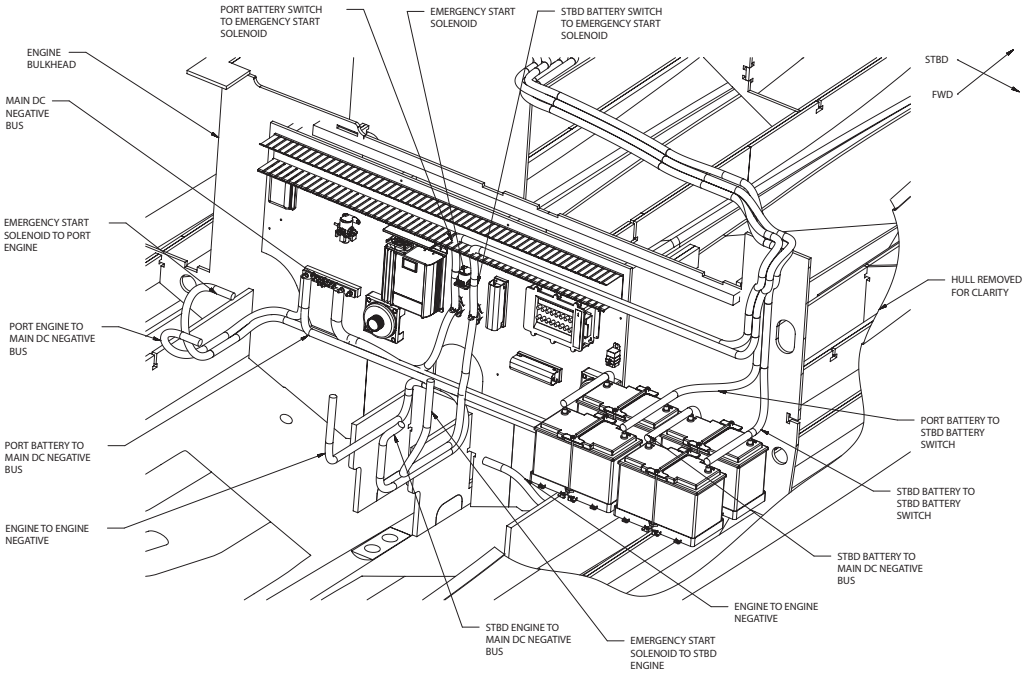

BATTERY CABLE ROUTING (V-DRIVE ENGINES W/ GENERATOR OPTION) (FIG. 6.3.2)

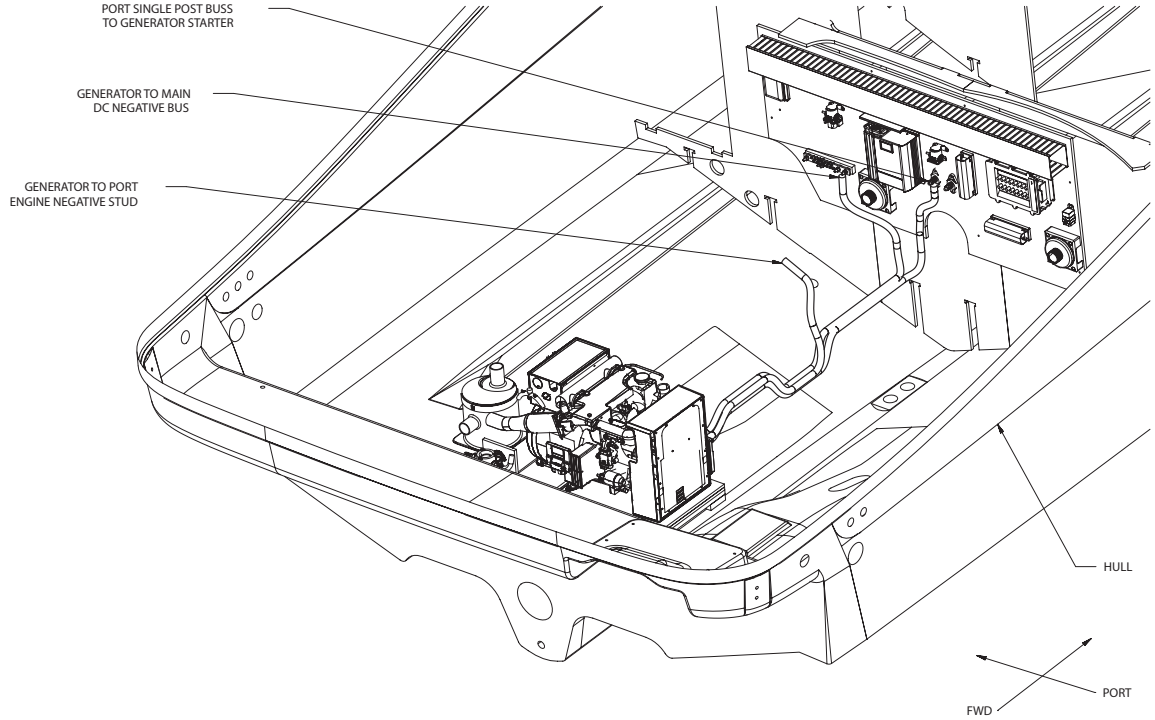

B. RECOMMENDED BATTERIES

The following table describes the recommended marine cranking batteries to install in your boat. All batteries should be of the same type, age & rating.

Application	Group	Volts	CCA*	Reserve	Qty.
Engines	31	12	800	200	2

*COLD CRANKING AMPS

RECOMMENDED BATTERY:
DOUGLAS BATTERY TYPE: 31DCM, ITEM NUMBER: 989 OR EQUIVALENT
DIMENSIONS: 13" x $6^{13}/_{16}$" x $10^{1}/_{16}$"

C. BATTERY SWITCH

The battery switch controls the delivery of DC power from the batteries to the engine and all equipment, lights and accessories using DC power. The battery switch is located on the main DC breaker panel under the helm seat.

NOTE: For safety and convenience the following items are not shut off by the battery switches: bilge pumps, sump pumps, stereo memory and battery charger inputs. These items need constant power to perform their task. This allows the bilge pump to operate any time excess fluid accumulates in the bilge, which can occur when the boat is docked and unattended. The entire remaining DC system is turned off with the battery switch.

BATTERY SWITCH (FIG. 6.4.1)

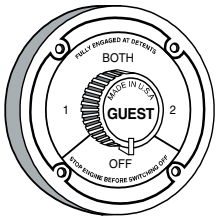

BATTERY SWITCH LOCATED UNDER HELM SEAT

2. IGNITION PROTECTION

All electrical components in the engine compartment must be ignition-protected to avoid the possibility of creating sparks in a gasoline environment.

⚠ DANGER

GASOLINE VAPORS CAN EXPLODE

Use ONLY Marine-rated parts to replace such items as starters, distributors, alternators, generators, etc.

Do not use automotive parts for these components or any jumper cables because they are not ignition-protected and could cause a fire or explosion.

Protective terminal covers, such as rubber boots on electrical connections, must be in place when engine is operating or when working in the engine compartment.

Jumper cables are not ignition-protected. DO NOT USE jumper cables in the engine compartment. The engine compartment may accumulate dangerous explosive gasoline fumes/vapors and hydrogen gas from batteries being charged. A spark produced when connecting a jumper cable can cause an explosion.

3. FUSES

The electronics fuse block is located behind the access panel below the dash. If you need to replace a fuse, **use only the same amperage as the original.** It is recommended that you carry spare fuses. See Fig. 6.5.1 for the proper fuse sizes.

If a fuse is replaced with one of lower amperage, it will not be sufficient to carry the electrical load of the equipment it is connected to and will cause nuisance fuse failure.

⚠ WARNING

Use of higher amperage fuses or breakers is a fire hazard.

Use fuses and breakers having the same amperage rating as the original or as specified.

If a fuse or breaker is replaced with one of higher amperage, it will not provide adequate protection against an electrical malfunction and will create a fire hazard.

ELECTRONICS FUSE BLOCK
(FIG. 6.5.1)

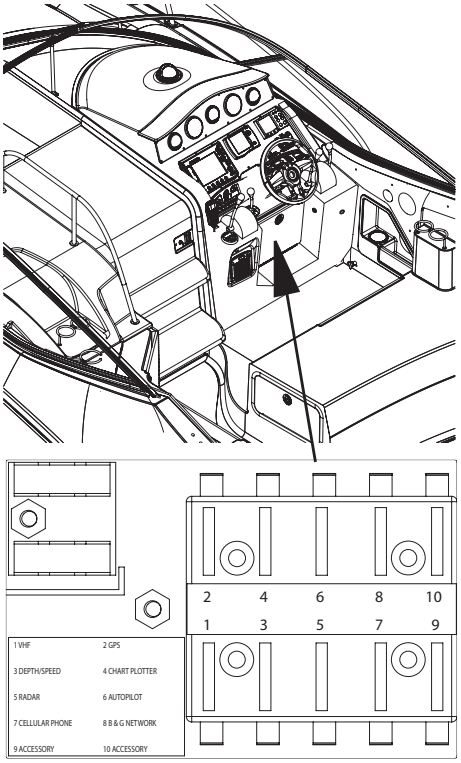

FUSE NAME	FUSE AMPERAGE 12VDC
1. VHF	*
2. GPS	*
3. DEPTH/SPEED	*
4. CHART PLOTTER	*
5. RADAR	*
6. AUTOPILOT	*
7. CELLULAR PHONE	N/A
8. B & G NETWORK	N/A
9. ACCESSORY	N/A
10. ACCESSORY	N/A

(*REFER TO MANUFACTURER'S RECOMMENDATION FOR FUSE RATING FOR VHF & CHART PLOTTER IF INSTALLED)

FUSE CONDITION (ATO TYPE FUSE)

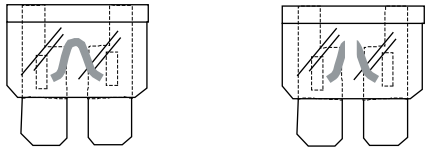

GOOD FUSE BLOWN FUSE

4. ELECTRONIC INTERFACE MODULE (EIM)

To control lights, bilge pumps and other accessories your boat has illuminated, waterproof, electronic switch pads with ISO symbols. The switch pads are connected to electronic interface modules (EIMs). The FWD EIM is located behind the access panel below the dash; the AFT EIM is located on the bilge component board on the forward side in the Engine Room. The EIMs use a push button reset breaker to protect these accessories.

FWD EIM
(FIG. 6.6.1)

BREAKER NAME (SIZE)	
CONSOLE DIMMER (5)	NAV LIGHTS (6)
VENT (5)	UNSWITCHED ACC (10)
WINDLASS CNTL (5)	ARCH COMP LIGHT (10)
STBD WIPER (5)	PORT WIPER (5)
STEREO (0.5)	SPOT LIGHT (10)
BLANK	BLANK
HORN (5)	ACC 1 (15)
KEY PAD (5)	12V RECEPT (15)

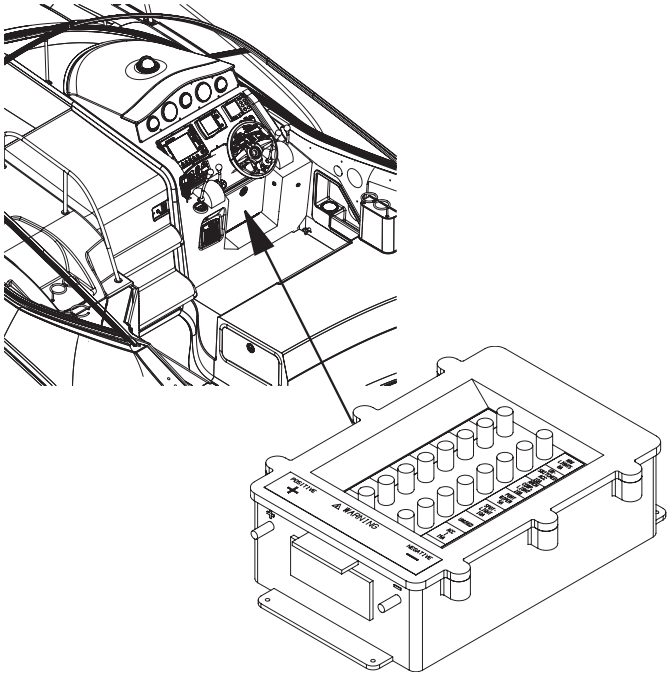

AFT EIM
(FIG. 6.6.2)

BREAKER NAME (SIZE)	
NAV LIGHTS (6)	BLANK
WINDLASS MAIN (5)	LIGHTS (15)
BLOWER 1 (7)	TRIM TABS (20)
BLOWER 2 (7)	BLANK
BLANK	SYS MONITOR (5)
BILGE PUMP (5)	STBD MERCHATODE (15)
ACC 2 (15)	PORT MERCATHODE (15)
HATCH LIFT (20)	STEREO MEMORY (15)

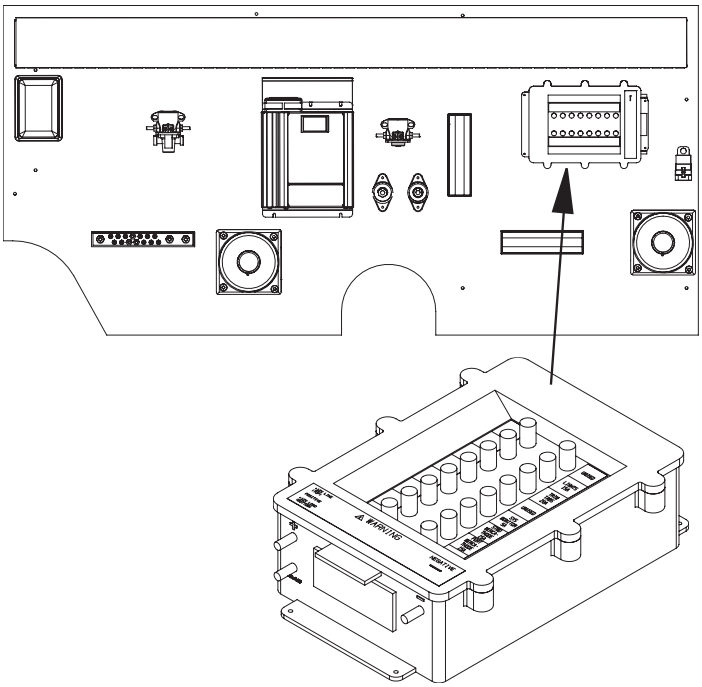

BILGE COMPONENT BOARD
(FIG. 6.7.1)

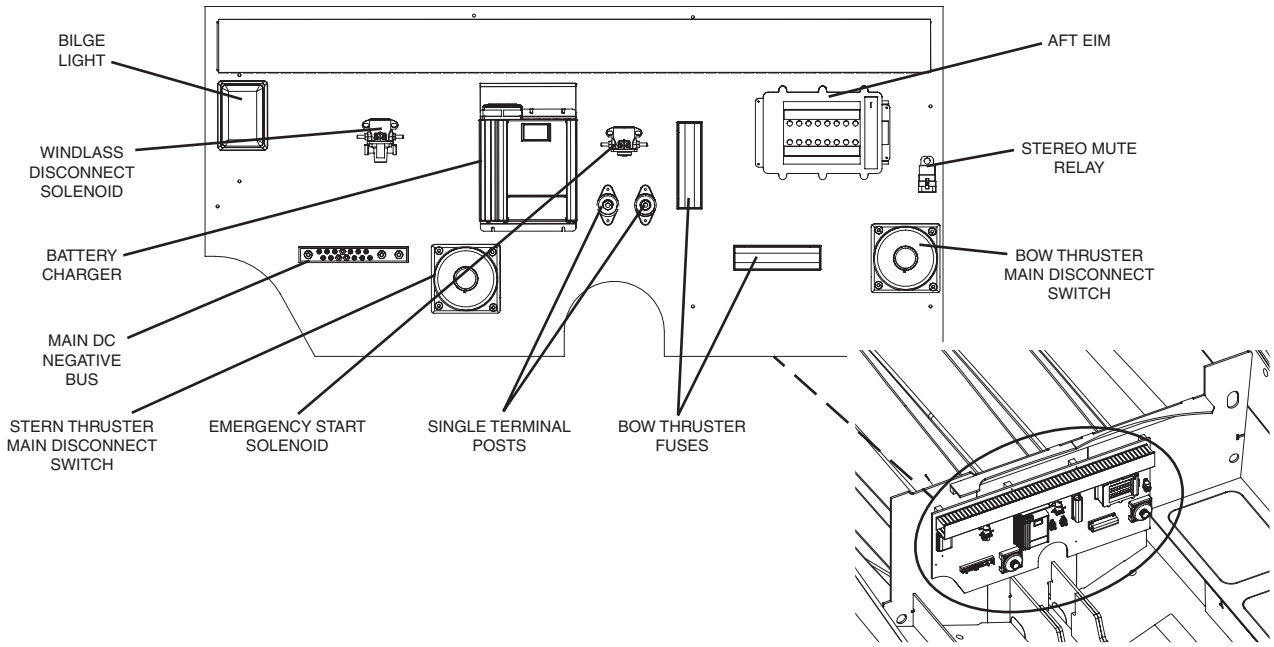

5. MAIN DC BREAKER PANEL

The main DC breaker panel (Fig. 6.7.1) is located under the helm seat. The panel contains breakers for various equipment plus the 12VDC battery switch(es).

The bilge pump, sump pump, stereo memory and battery chargers remain energized at all times and CANNOT be turned OFF with the battery switches. The entire remaining DC system CAN be turned OFF with the battery switches.

MAIN DC BREAKER PANEL (LOCATED UNDER THE HELM SEAT)
(FIG. 6.8.1)

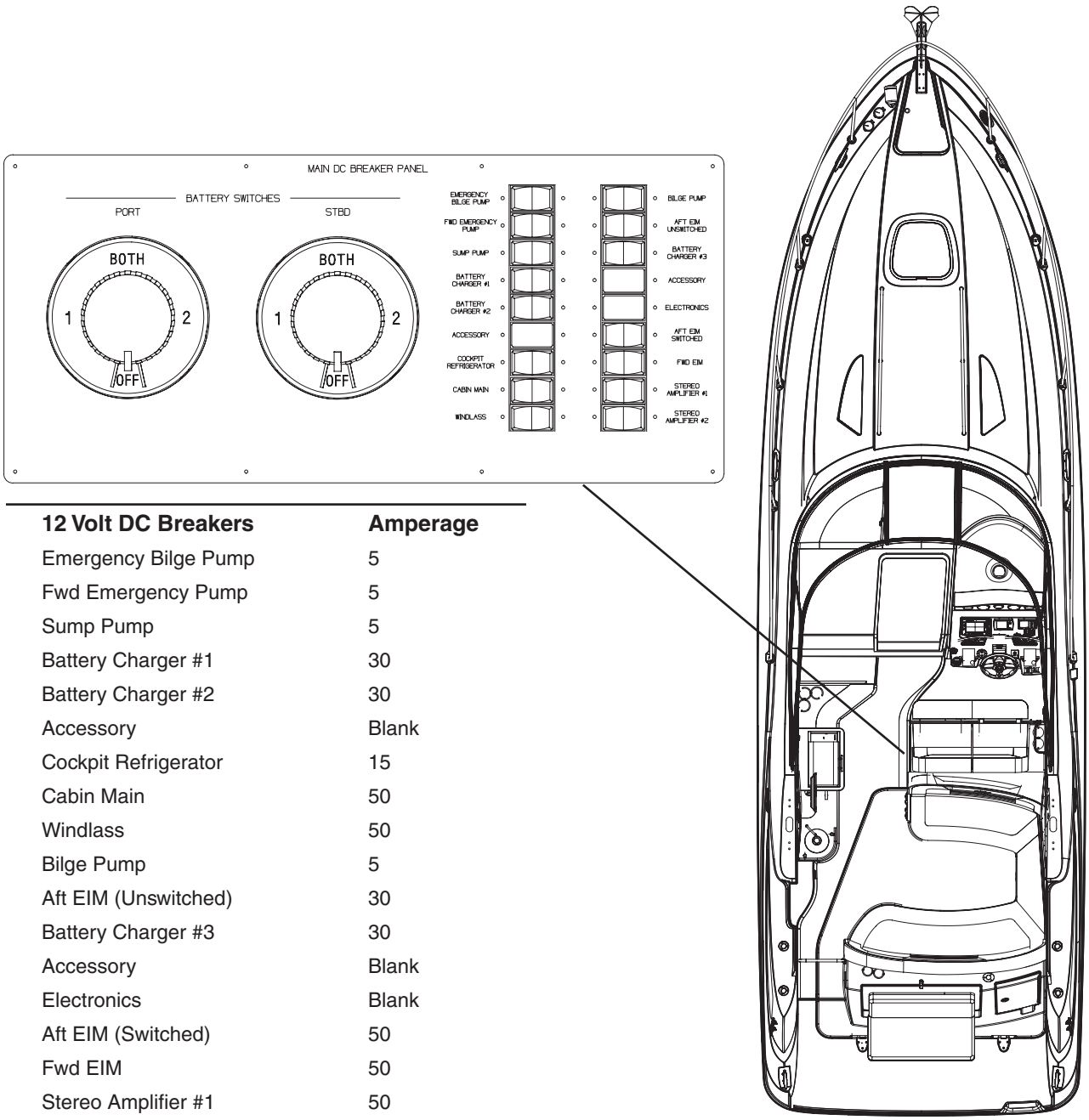

12 Volt DC Breakers	Amperage
Emergency Bilge Pump	5
Fwd Emergency Pump	5
Sump Pump	5
Battery Charger #1	30
Battery Charger #2	30
Accessory	Blank
Cockpit Refrigerator	15
Cabin Main	50
Windlass	50
Bilge Pump	5
Aft EIM (Unswitched)	30
Battery Charger #3	30
Accessory	Blank
Electronics	Blank
Aft EIM (Switched)	50
Fwd EIM	50
Stereo Amplifier #1	50
Stereo Amplifier #2	25

6. 12 VOLT ACCESSORY RECEPTACLE

Your boat has a 12 volt accessory receptacle on the STBD side of the dash and one in the galley. The receptacle is a cigarette lighter style plug that may be used with any 12 volt accessories using this type of plug.

12 VOLT ACCESSORY RECEPTACLE
(FIG. 6.9.1)

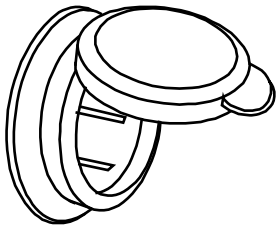

7. LIGHTING

Your boat is equipped with a variety of different lighting fixtures (See Fig. 6.10.1 and 6.11.1). **Always replace a bulb using the type and wattage of the original bulb.**

8. AC SYSTEM

NOTE: Actual usage of equipment will depend on the amperage output of the power source available.

⚠ DANGER

EXTREME HAZARD – Swimming near a boat operating on AC electrical system can lead to severe shock and death. Never swim or allow swimming when AC system is in use.

Line voltage from the shore power is shown by the voltmeter on the main distribution panel. The main breakers may trip if there is a surge in line voltage, an electrical storm or an on board system overload. The main breaker interrupts both the neutral and hot feeds in the AC circuit to prevent equipment damage due to internal overloads and external surges.

120 Volt / 60 Hz Wiring (Standard System)

⚠ CAUTION

Never operate 120V shore power at less than 110 V.

The 120 volt wiring installed on Sea Ray® boats consists of three (3) color-coded wires. The black wire is the "hot" feed, white is the common, or neutral, and the green wire is the ground. All branch breakers and switches for AC equipment are installed on the "hot" wire. The green conductor of the shore power is connected through the galvanic isolator and then connected to the AC grounding bus bar behind the main distribution panel.

220 Volt / 50 Hz Wiring (Optional System)

⚠ CAUTION

Never operate 220V shore power at less than 208 V.

The 220 volt / 50Hz wiring installed on Sea Ray® boats consists of three (3) color-coded wires. The brown wire is the "hot" feed, light blue is the common, or neutral, and the green wire is the ground. All branch breakers and switches for AC equipment are installed on the "hot" wire. The green conductor of the shore power is connected through the galvanic isolator and then connected to the AC grounding bus bar behind the main distribution panel.

EXTERIOR LIGHTS
(FIG. 6.10.1)

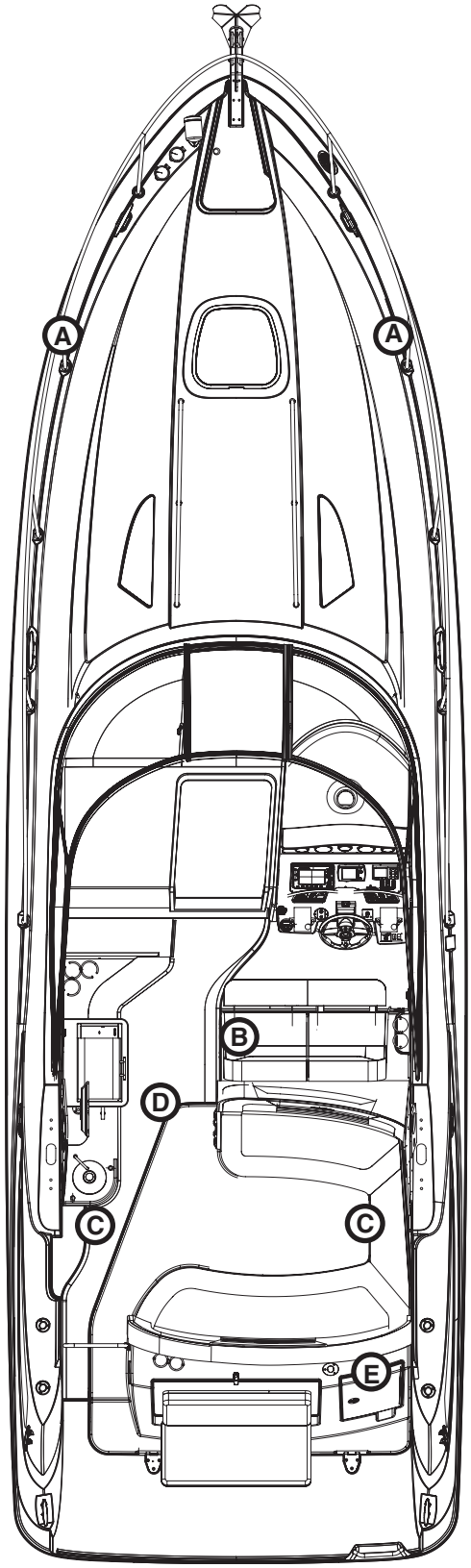

BOW NAV. LIGHT

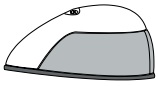

BULB REPLACEMENT
BULB# GE2641L
12V R 10W

(A)

MAST NAV. LIGHT
(LOCATED ON SPOILER)

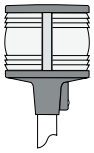

BULB REPLACEMENT
FUSE TYPE BULB
#12V10WPERKO

(B)

COCKPIT LIGHT

BULB REPLACEMENT
FUSE TYPE BULB
#12V10WPERKO #70-0

(C)

RECTANGLE LIGHT
(LOCATED IN BILGE)

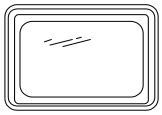

BULB
REPLACEMENT
BULB#CEC1141

(D)

COURTESY LIGHT

BULB
REPLACEMENT
BULB#T125

(E)

INTERIOR LIGHTS
(FIG. 6.11.1)

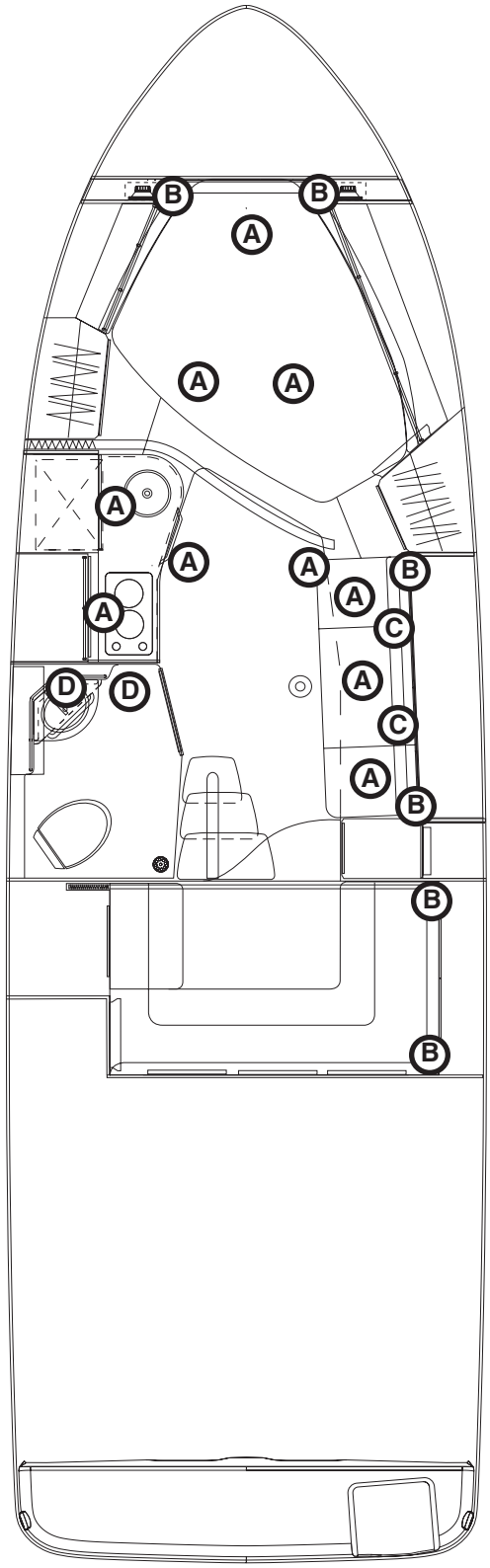

INDIRECT LIGHTS

A LED LIGHT - NO REPLACEMENT BULB

READING LIGHT

B BULB REPLACEMENT HALOGEN 12V 10W BI-PRONG

EYEBALL LIGHT

C BULB REPLACEMENT XENON HALOGEN 24V 10W BI-PRONG

COURTESY LIGHT

D BULB REPLACEMENT BULB#T125

9. MAIN DISTRIBUTION PANEL CONTROLS AND FUNCTIONS

MAIN DISTRIBUTION PANEL (120V / 60HZ SHOWN) (LOCATED IN THE CABIN)
(FIG. 6.12.1)

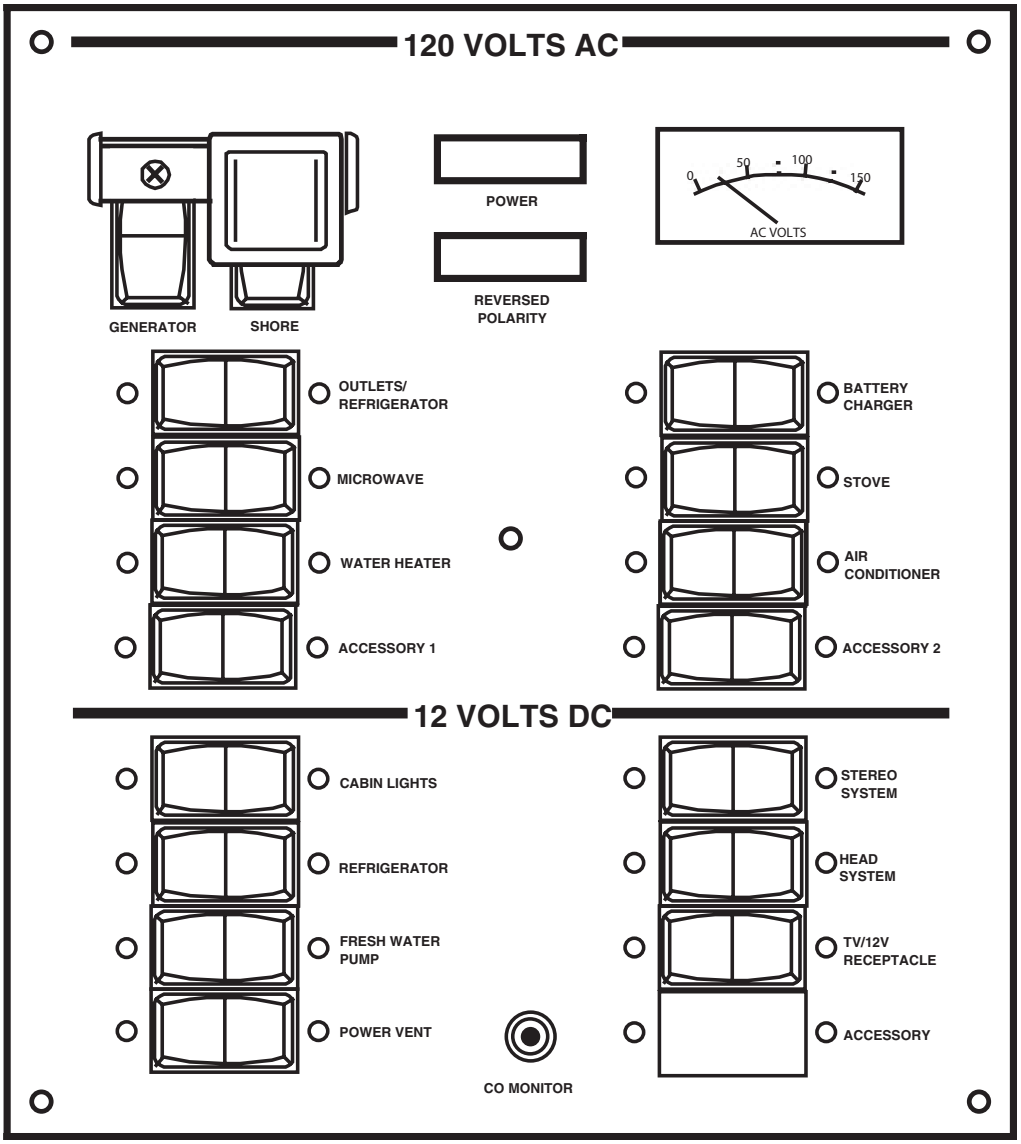

120 Volt AC Breakers	Size	220 Volt AC Breakers	Size	12 Volt DC Breakers	Size
Shore	30	Shore	20	Cabin Lights	20
Generator (Optional)	50	Generator (Optional)	35	Refrigerator	15
Outlets/Refrigerator	20	Outlets/Refrigerator	10	Fresh Water Pump	10
Microwave	20	Microwave	10	Power Vent	7.5
Water Heater	15	Water Heater	10	CO Monitor	1
Battery Charger	10	Battery Charger	5	Stereo System	25
Stove	20	Stove	10	Head System	20
Air Conditioner (Optional)	20	Air Conditioner (Optional)	15	TV/12V Receptacle	15

10. Shore Power

A. Shore Power Cords

The 310 DA is equipped with a 30AMP/ 120V/60 cycle shore power cord for hookup to dockside power. The cord is stored in the transom storage box.

B. Main Shore Power Breaker Box

The 310 DA is equipped with a 120VAC main shore power breaker box located on the forward wall of the transom storage box.

The breaker must be ON to operate the shore AC power system.

C. Shore Power

The 120 volt AC main distribution panel distributes the required voltage for all the boat's AC equipment and accessories. It is very important to know and understand where the power originates and how the power is distributed to the different voltage equipment and accessories.

To access the shore power see "Shore Power" in Section 3 - *Using Your Boat*.

11. Generator (Optional)

Sea Ray® strongly urges you to fully comply with the manual provided by the generator manufacturer. **The generator is warranted separately by the generator manufacturer, NOT Sea Ray®**. Follow the recommended maintenance and warranty schedule in your Generator Operator's Manual included in the Owner's Manual Packet. Generator abuse or improper maintenance may adversely affect claims made under generator manufacturer separate warranty.

⚠ CAUTION

Do not run the generator in an enclosed area, such as a closed boathouse, as there is a possibility of buildup and inhaling of carbon monoxide.

A. Generator Operation

The procedures for starting, stopping and switching between generator and shore power are explained in Section 3 - *Using Your Boat*, pages 3.7 - 3.10.

12. Servicing the Main Distribution Panel

NOTE: Servicing should be referred to a qualified electrician.

⚠ WARNING

Disconnect the power cable from power source before performing maintenance.

A. To Replace a Faulty Component on the Main Distribution Panel:

1. Turn all breakers OFF.
2. Unplug the shore power.
3. Remove screws from all sides except the hinged side of panel. The main distribution panel is hinged to swing open for servicing.
4. Reverse the procedure for closing the panel.

13. Battery Charger/Converter

The battery charging unit located on the bilge component board is fully automatic and is designed specifically for the marine environment. The high frequency characteristic has allowed these chargers to achieve a huge size and weight reduction over previously used equipment. Commonly called high frequency or smart chargers, these units bring a new sophistication to the battery charger field.

⚠ WARNING

Never block air circulation through the unit. Never store any gear on top of the units.

NOTICE

Leave the converter running at all times to maintain the 12 volt system voltage.

BATTERY CHARGER / CONVERTER
(FIG. 6.14.1)

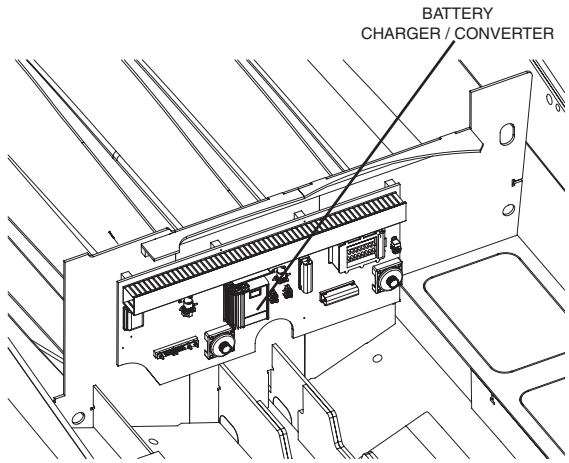

Charging characteristics contain four (4) modes:

- **Boost Mode** - this is initiated at power up and provides the chargers full-rated current to the battery bank at a level of 14.4V until battery reaches 90% of full charge.
- **Normal Mode** - this stage immediately follows the bulk charge mode. It maintains the battery voltage at the bulk charge voltage level, but gradually decreases the current as the battery accepts the charge until it reaches a predetermined current level.
- **Float Mode** - this stage is designed to hold the battery at a safe, low voltage (typically 13.2V) providing up to the chargers full rated amperage to accommodate DC load requirements. The charge will remain in this mode until the 12 volt system is activated.
- **Equalize Mode** - this stage activates for 15 minutes every 21 hours. When the converter/charger is in the float mode the voltage is increased to 14.4 volts which mixes the battery electrolyte to prevent battery stratification.

Note: Leave the charger/converter turned ON at all times to maintain battery voltage level.

Note: Check monthly to ensure that water level in the batteries is properly maintained.

REFER TO OWNER'S MANUAL PACKET FOR INSTRUCTIONS AND WARRANTY INFORMATION.

14. GROUND FAULT INTERRUPTER RECEPTACLE (GFI)

A ground fault interrupter receptacle is located in the cabin. Please read and understand the CAUTION block for GFI receptacles.

⚠ CAUTION

Persons with heart problems or other conditions which make them susceptible to electric shock may still be injured by ground faults on circuits protected by the GFI receptacle. No safety devices yet designed will protect against all hazards or carelessly handled or misused electrical equipment or wiring.

The GFI receptacle is designed to protect people from the line-to-ground shock hazards which could occur from defective power tools or appliances operating from this device, or from down-line outlets protected by it. It does not prevent line-to-ground electric shock, but does limit the time of exposure to a period considered safe for otherwise normally healthy persons. It does not protect persons against line-to-line or line-to-neutral faults.

GFI OUTLET
(FIG. 6.14.2)

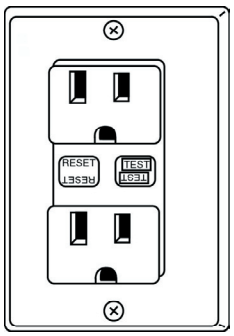

The GFI receptacle does not protect against short circuits or overloads. This is the function of the circuit breaker.

A. INTERNATIONAL RECEPTACLE

If equipped, all readily accessible 220V outlets are protected by a Residual Current Circuit Breaker (RCCB). This current breaker includes a test switch to verify proper operation. Its function is similar, but not identical to the 120V GFI.

REFER TO OWNER'S MANUAL PACKET FOR INSTRUCTIONS AND WARRANTY INFORMATION.

RCCB OUTLET
(FIG. 6.15.1)

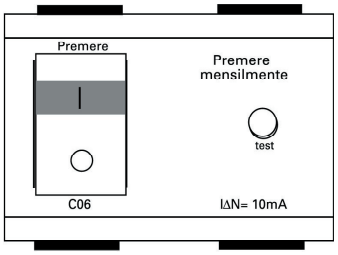

15. ELECTROLYTIC CORROSION AND ZINC ANODES

Electrolytic corrosion of metals on power boats can result in rapid and serious deterioration of metal parts. You must set a regular schedule and look for the possibility of electrolytic corrosion (the deterioration of metals due to dissimilar characteristics when placed in salt water). It is your responsibility to check for and replace parts damaged due to electrolytic corrosion.

To minimize electrolytic corrosion of the metals on your boat, zinc anode plates are provided on your boat to protect underwater hardware. Zinc, being much less "noble" than the copper-based alloys and aluminum used in underwater fittings, will deteriorate first and protect the other metals.

Stern drives are fitted with zinc anodes on their lower units (refer to your Engine Owner's Manual for their locations). If your boat is equipped with trim tabs, zinc plates are installed on each of the trim tabs.

Zinc anodes require replacement about every six months, if the boat is operated in salt water. In fresh water, the zinc anodes can be replaced about once a year.

If the anodes deteriorate more rapidly than this, there is probably a stray current problem within the boat or at the slip or mooring.

If the anodes do not deteriorate, they are not protecting the other metallic parts of your boat. This can be caused by loose anodes or by low grade zinc or by not having a solid electrical contact between the anode and the metal it contacts, or by paint on the anodes.

If the anodes are deteriorating rapidly, or not at all, contact your dealer.

When an AC shore power system is connected to the boat, the underwater metal fittings will, in effect, be connected through the water to grounded metals ashore. This results in the zincs being consumed at a faster rate unless the marina maintains a protective system to prevent this. When the marina provides a zinc anode in the water bonded to the metal outlet box on the dock, zinc loss on the boat will be reduced. Do not connect this zinc to the boat's ground system.

It is extremely important that all electrically-operated DC equipment and accessories be wired so that the ground polarity of each device is the same as that of the battery. Your boat has a negative ground system. The zinc anode is connected to every metal item in the boat (fuel tanks, underwater gear, etc.) via the green bonding wire.

Galvanic Isolator: Electrolytic corrosion can also be caused by "stray currents" due to a fault in an electrical item, even though correctly grounded. A galvanic current isolator (zinc saver) is standard on all Sea Ray® boats. It is installed between the shore power ground and the boats' AC grounding

connection to the DC bonding system. This connection maintains the safety ground from dockside power while stopping the flow of DC corrosive currents. The galvanic isolator is located behind the main distribution panel in the cabin.

⚠ CAUTION

Never disconnect the green wire (safety ground) from the engine terminal.

NOTICE

DO NOT PAINT BETWEEN THE ZINC AND THE METAL IT CONTACTS, AND DO NOT PAINT OVER THE ZINC.

16. Marine Electronic Cathodic Anti-Corrosion System

The automatically controlled Cathodic Anti-Corrosion System for marine installation protects underwater metals from the effects of corrosion and electrolysis on stern drives. The system components are designed for marine service. DO NOT PAINT THE MERCATHODE® SYSTEM.

The anode and reference electrode are attached to the electrode assembly under each stern drive unit. The solid state controller is mounted within a plastic housing on the transom in the bilge.

Maintenance

The Mercathode® system must be tested to ensure adequate output. The test should be performed every 100 hours or annually. Contact your authorized Sea Ray® dealer to arrange for this test. Refer to the engine operator's manual for more detailed information.

17. Electrical Schematics

This owner's manual contains electrical schematics and wiring harness illustrations for your boat. These electrical schematics were generated by electrical CAD designers at the engineering division for technical reference and service technicians. Sea Ray® does not recommend that you attempt to work on the boat's electrical system yourself. Instead, we recommend that you take your boat to your authorized Sea Ray® dealer for service. Sea Ray® reserves the right to change or update the electrical system on any model at any time without notice to the consumer and is NOT obligated to make any updates to units built prior to changes.

DC Wiring Diagram (1 of 8)
(Fig. 6.17.1) DRAWING NO. 09-60 (1 OF 8)

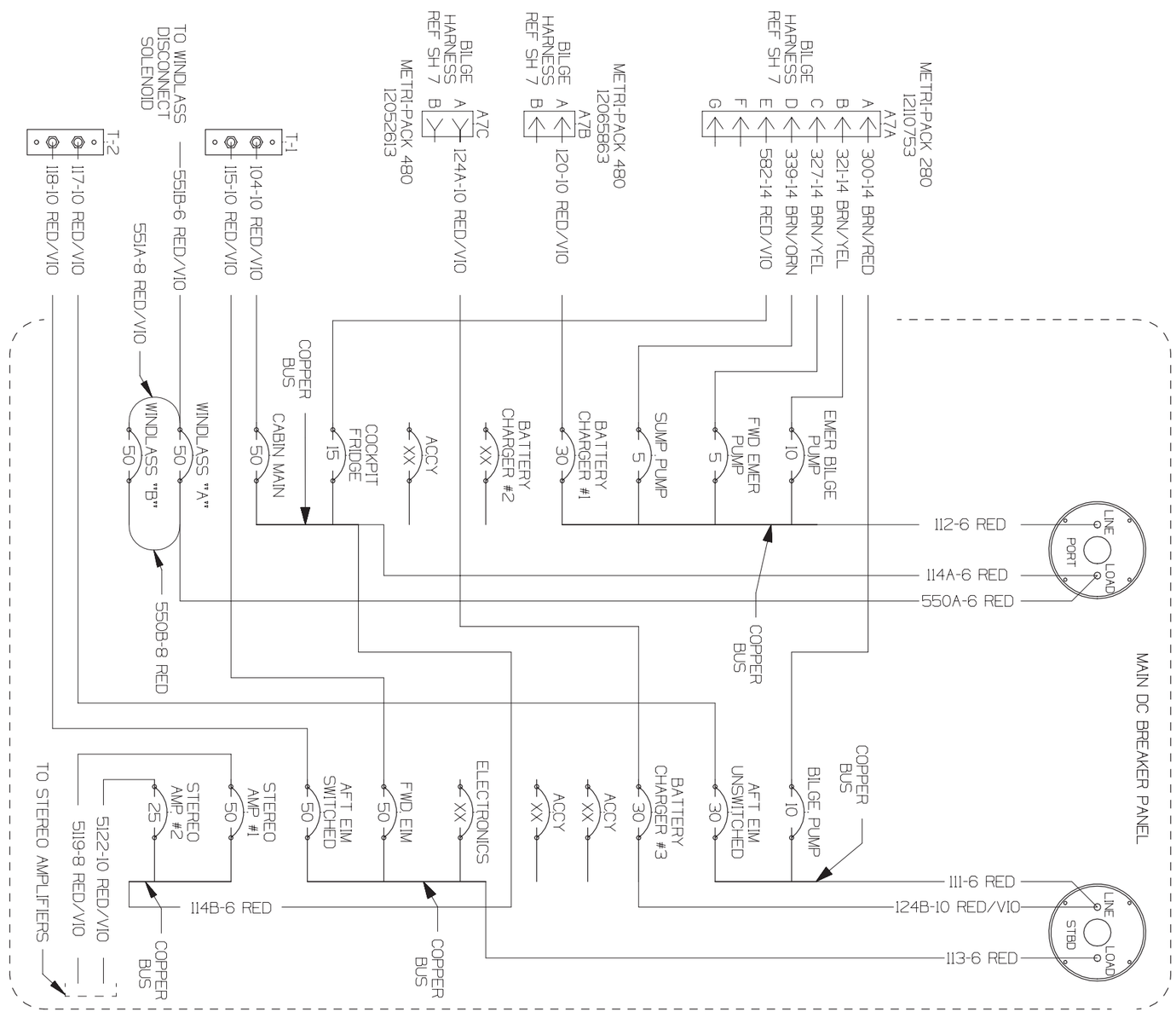

DC Wiring Diagram (2 of 8)
(Fig. 6.18.1) DRAWING NO. 09-601 (2 OF 8)

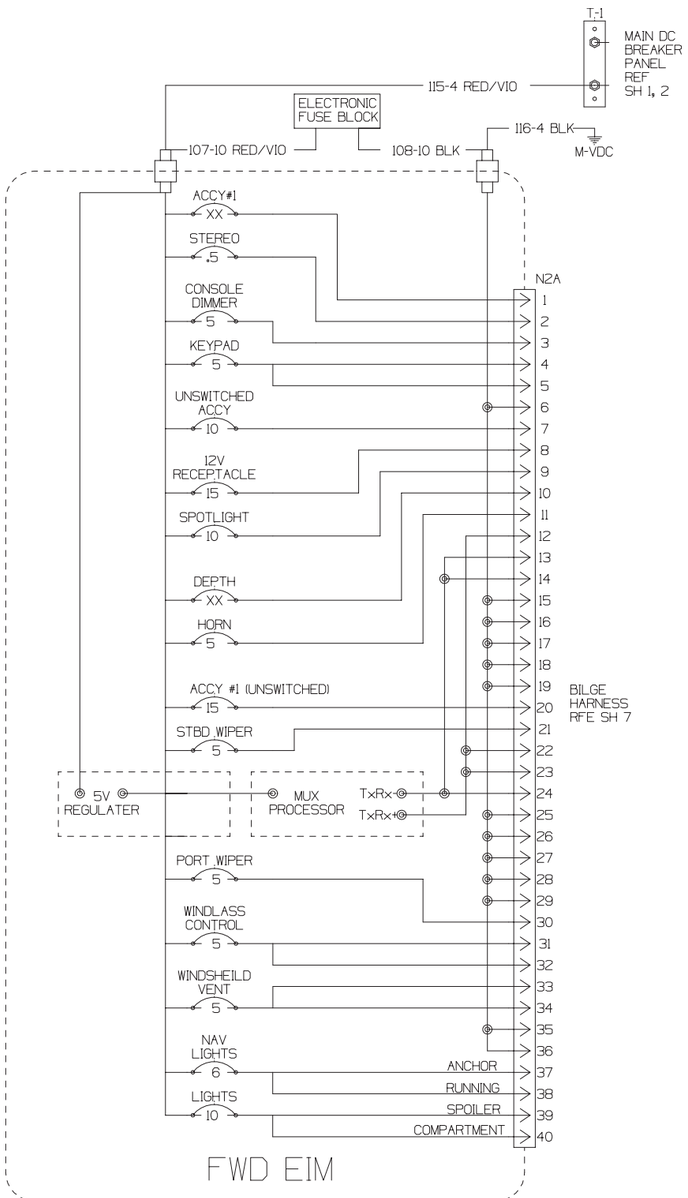

DC Wiring Diagram (3 of 8)
(Fig. 6.18.2) DRAWING NO. 09-601 (3 OF 8)

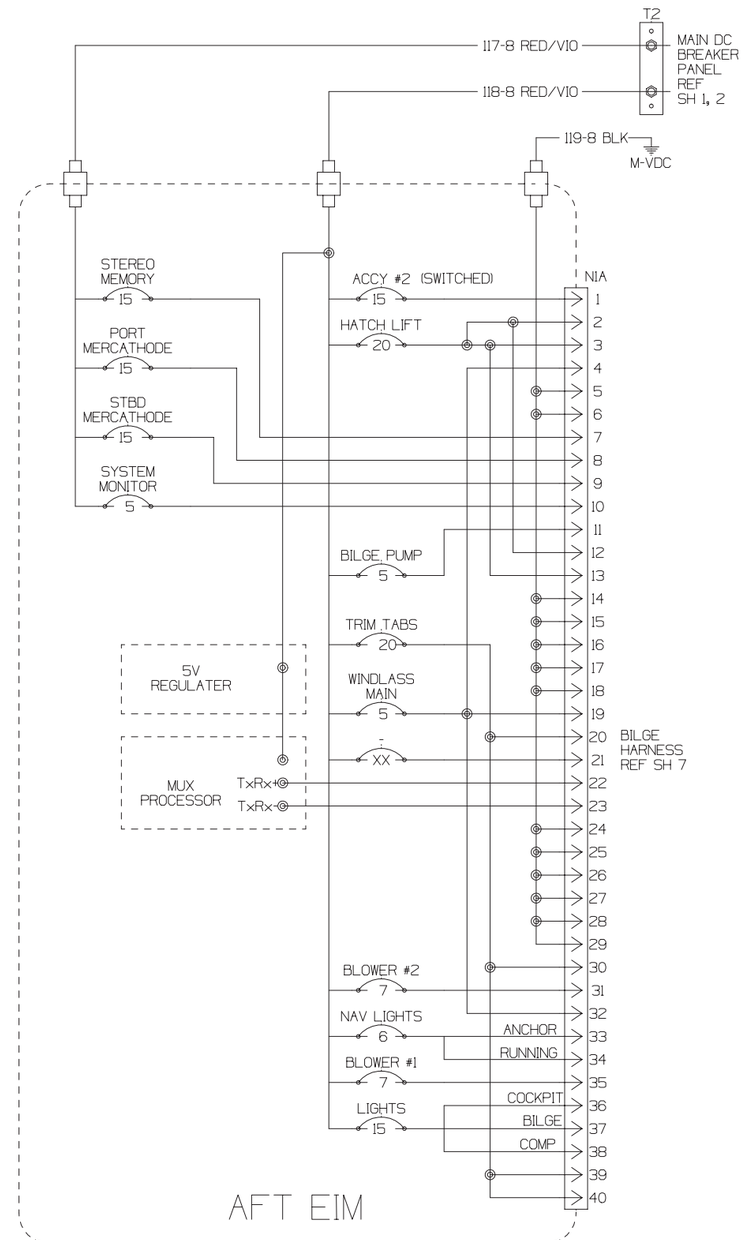

DC Wiring Diagram (4 of 8)
(Fig. 6.19.1) DRAWING NO. 09-601 (4 OF 8)

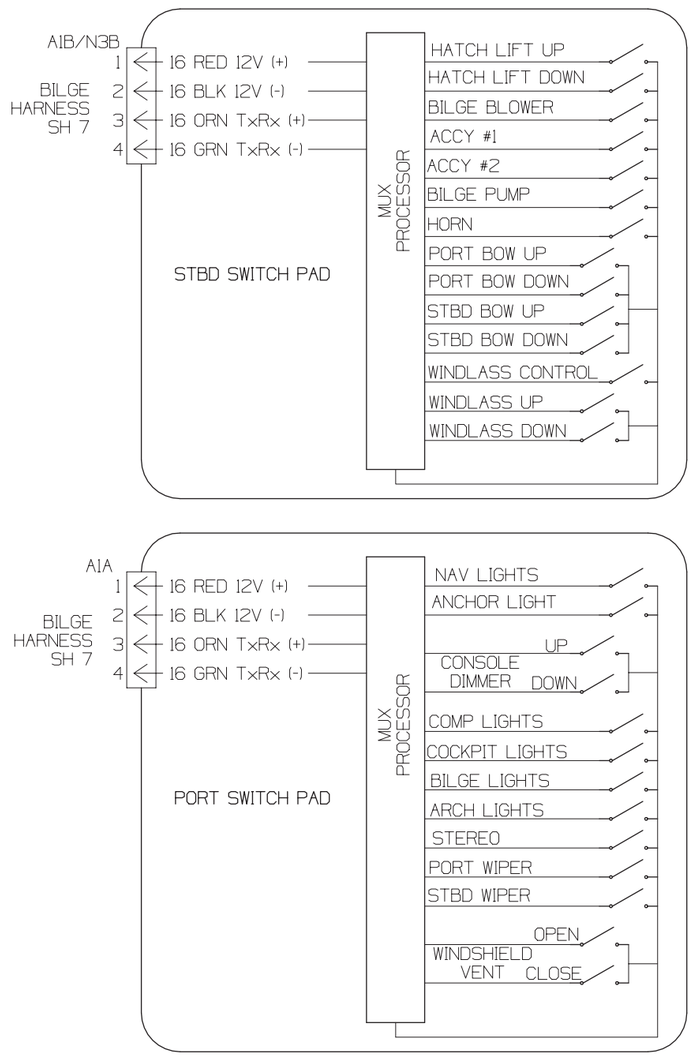

DC Wiring Diagram (5 of 8)
(Fig. 6.19.2) DRAWING NO. 09-601 (5 OF 8)

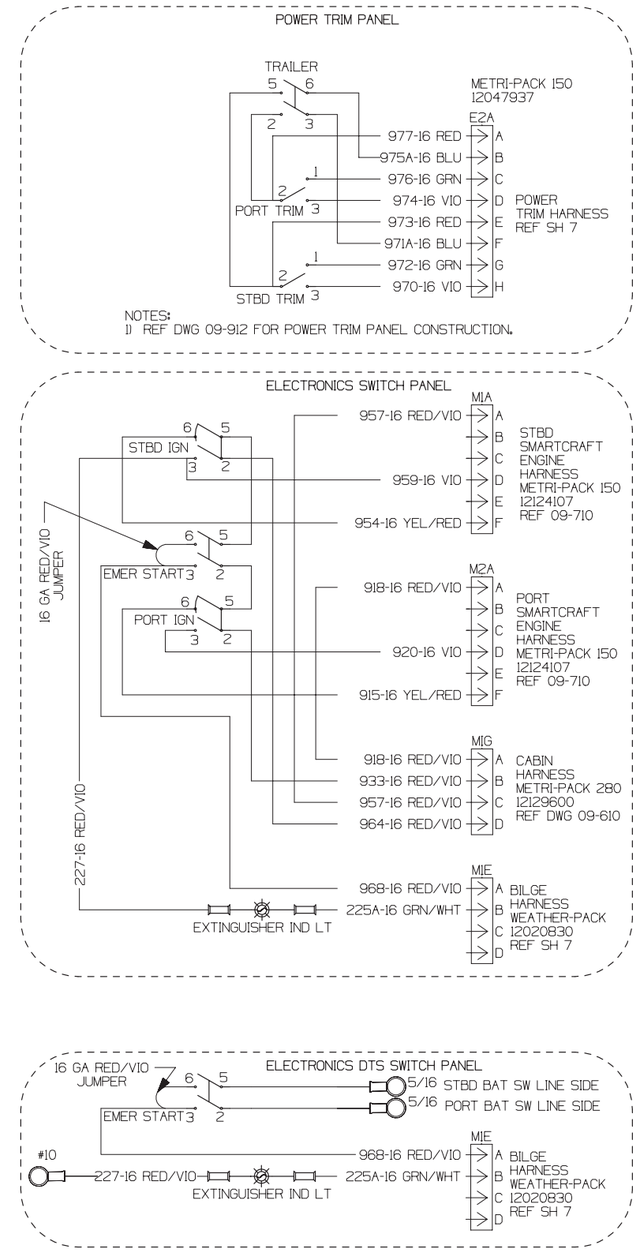

DC Wiring Diagram (6 of 8)
(Fig. 6.20.1) DRAWING NO. 09-601 (6 OF 8)

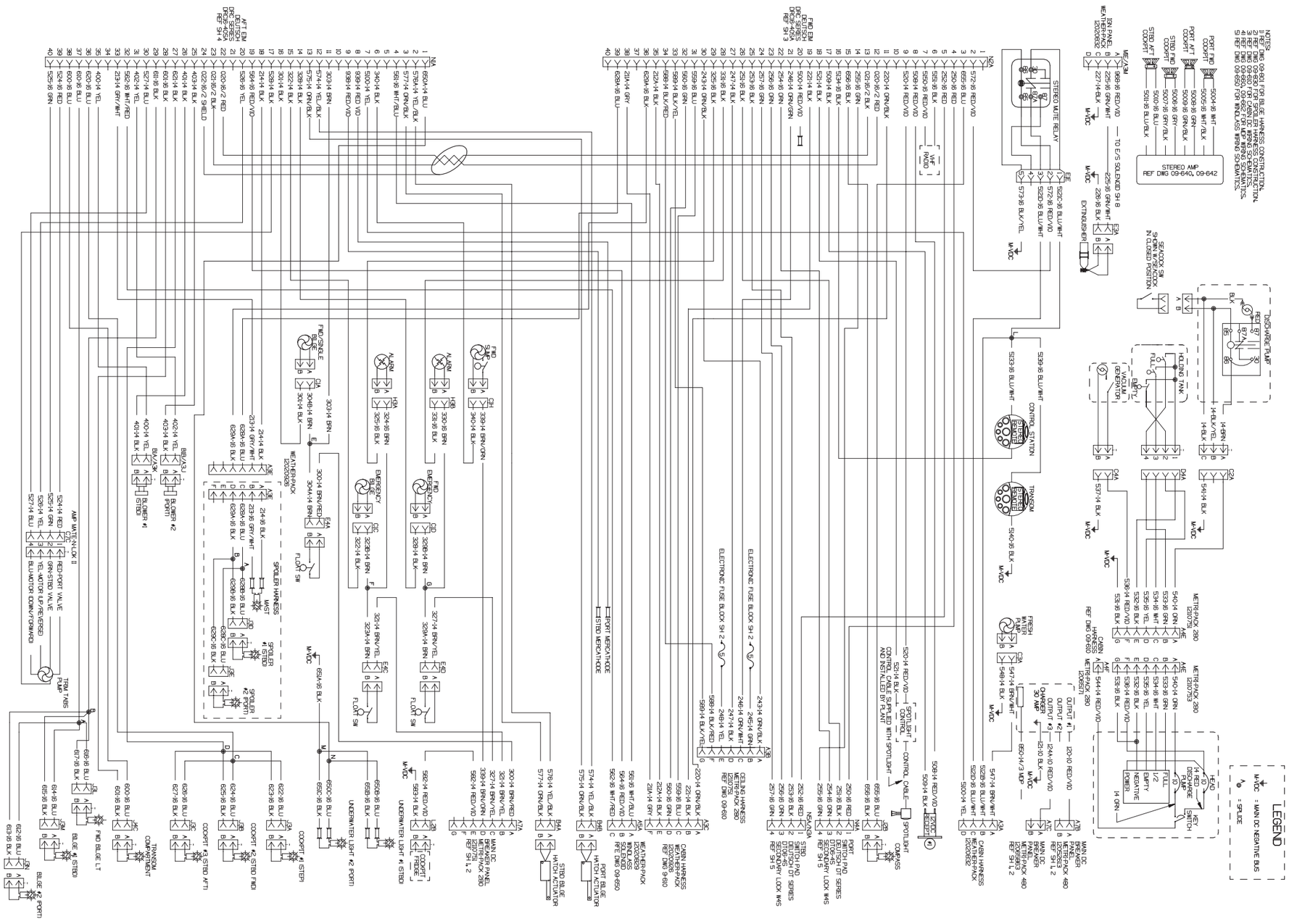

DC Wiring Diagram (7 of 8)
(Fig. 6.21.1) DRAWING NO. 09-601 (7 OF 8)

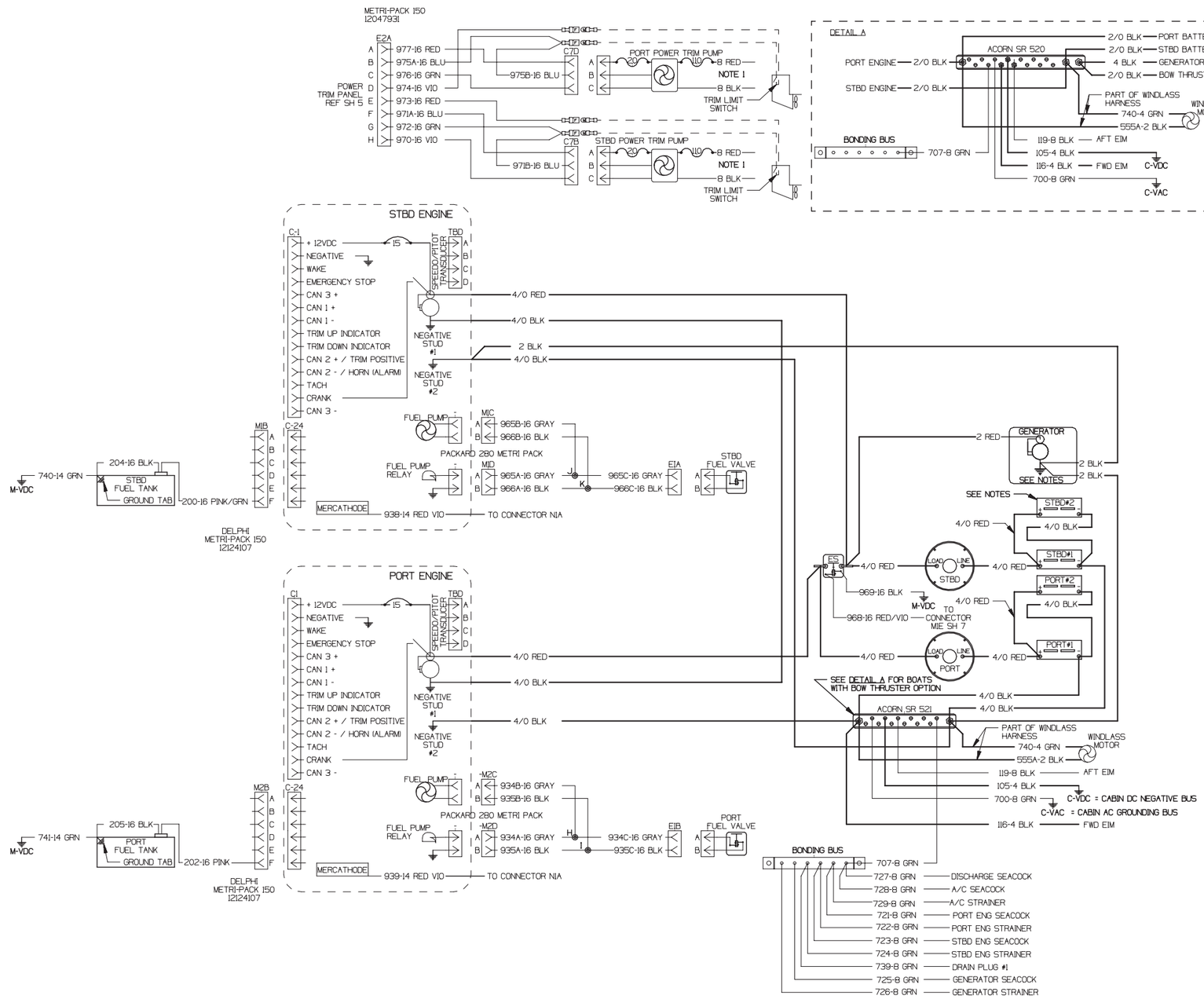

DC Wiring Diagram (8 of 8)
(Fig. 6.22.1) DRAWING NO. 09-601 (8 OF 8)

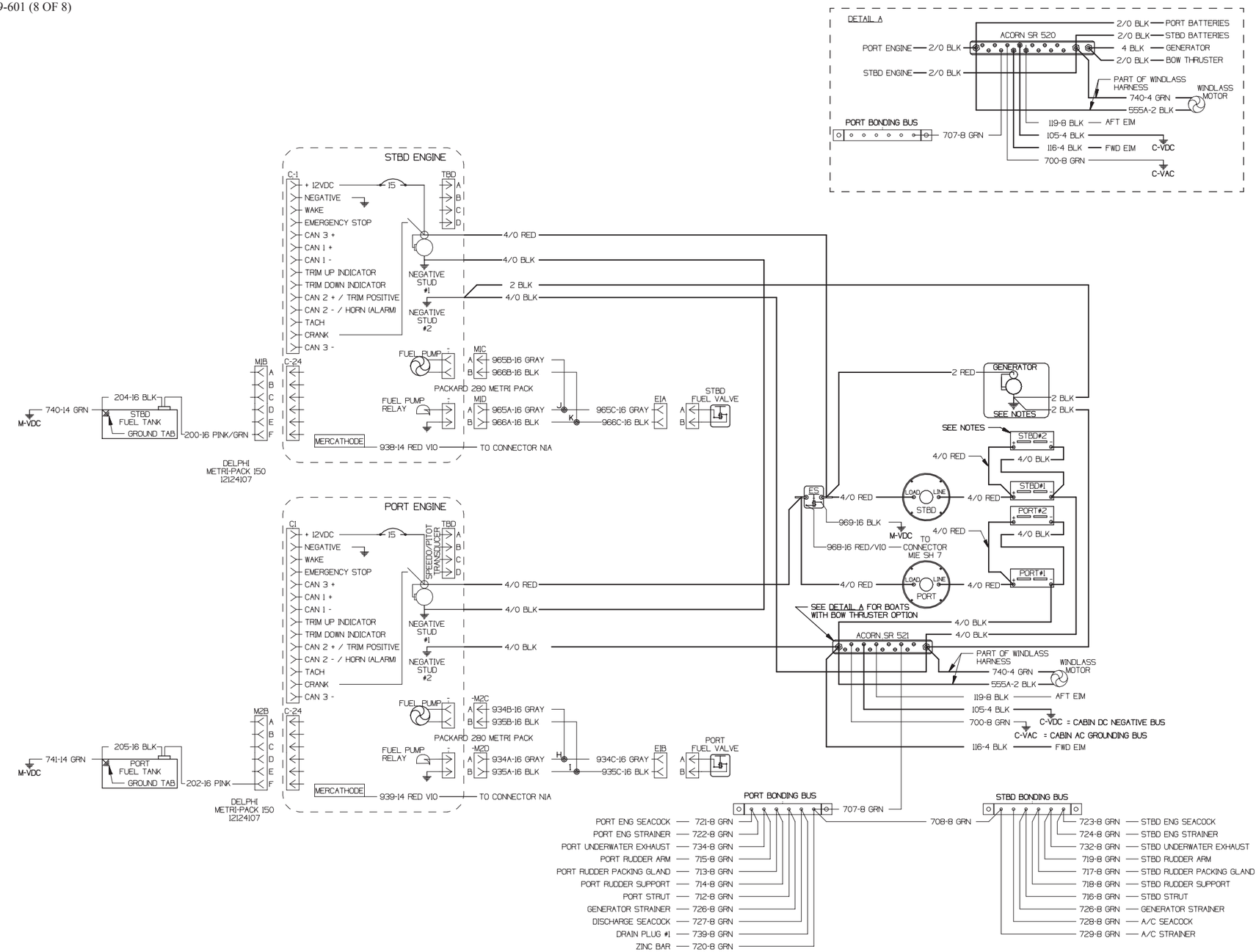

DC Wiring Diagram (Volvo Diesel Option)
(Fig. 6.23.1) DRAWING NO. 09-605

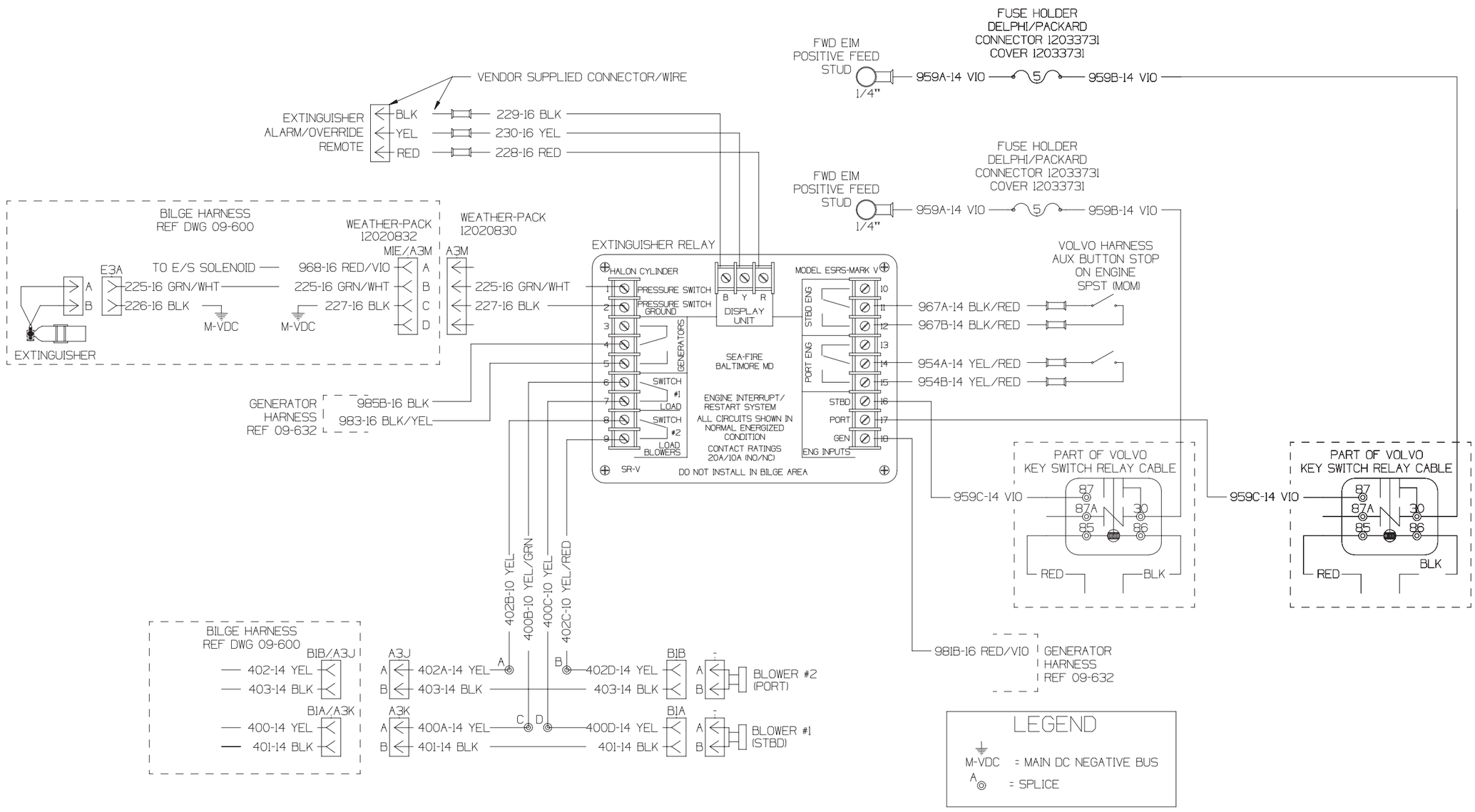

Cabin DC Wiring Diagram
(Fig. 6.24.1) DRAWING NO. 09-610

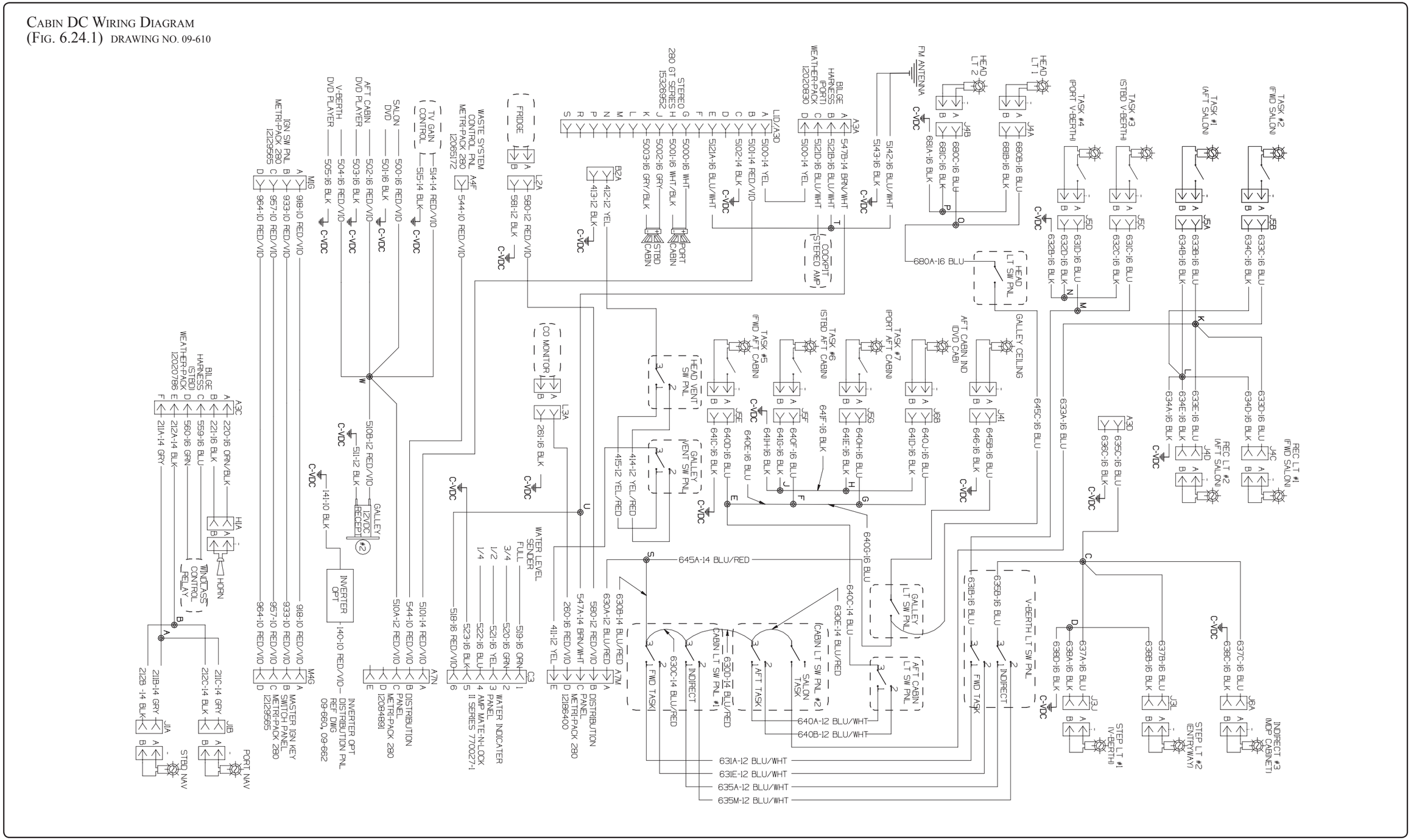

Bow/Stern Thruster Wiring Diagram
(Fig. 6.25.1) DRAWING NO. 09-612

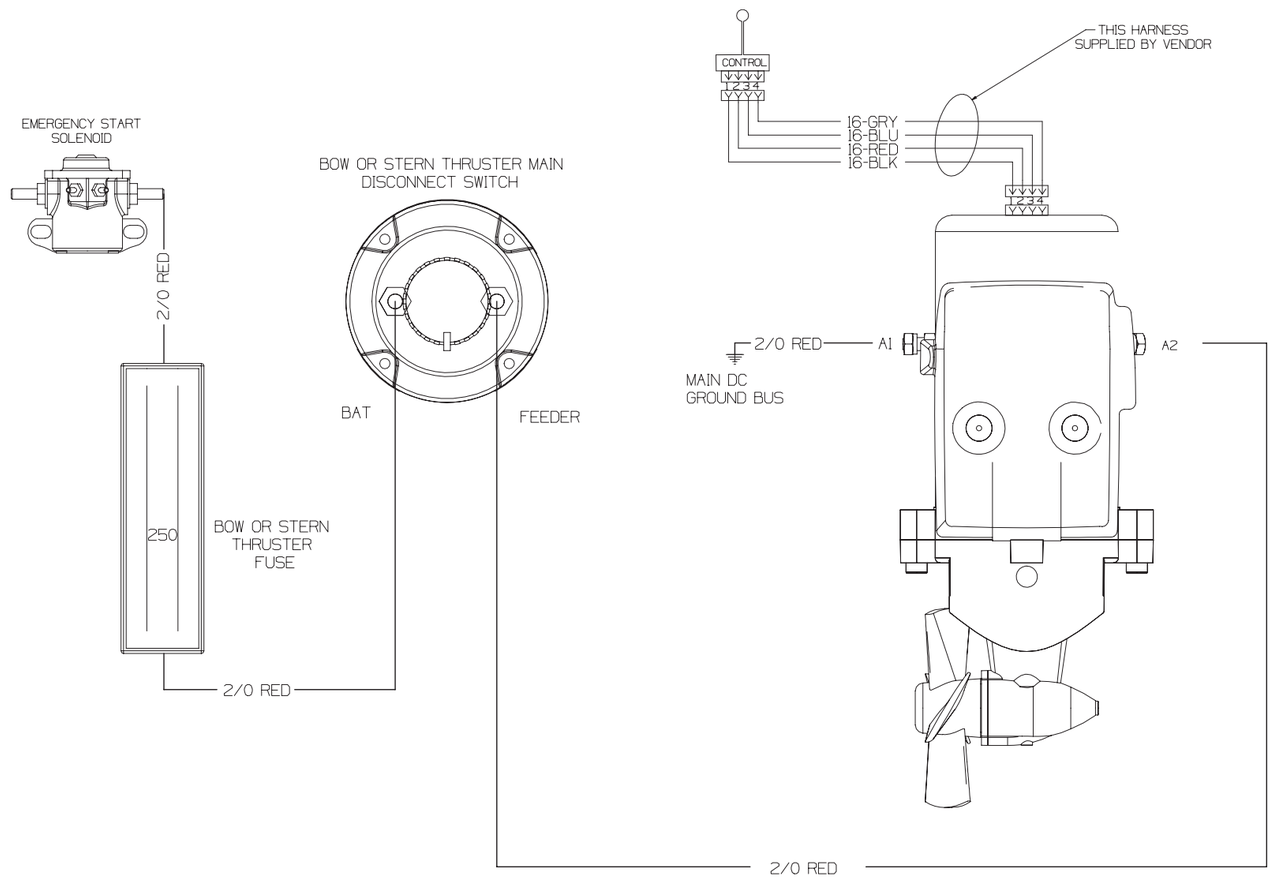

Generator Wiring Diagram (Gas 110V Option)
(Fig. 6.26.1) DRAWING NO. 09-630

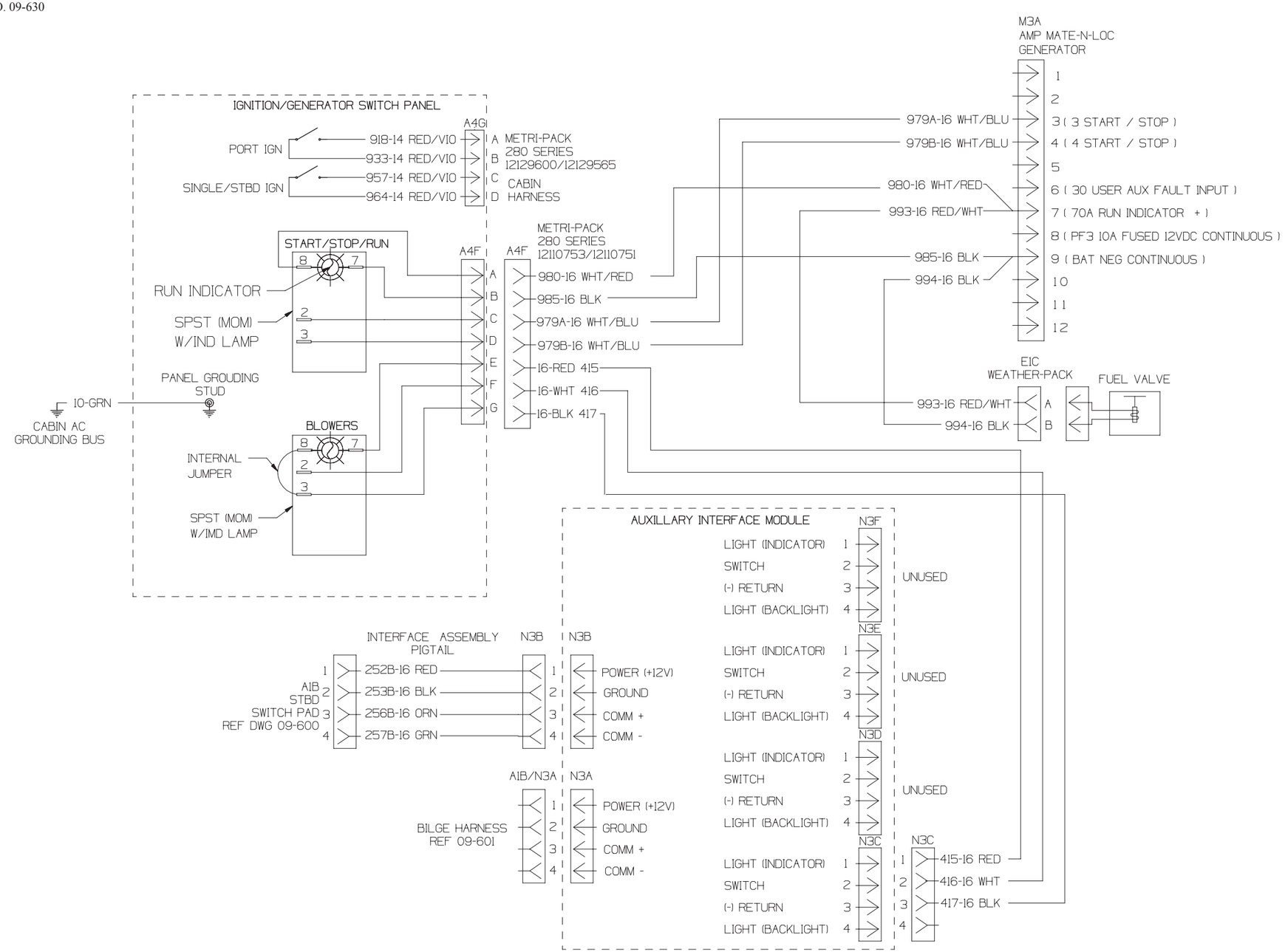

Generator Wiring Diagram (Diesel Option)
(Fig. 6.27.1) DRAWING NO. 09-632

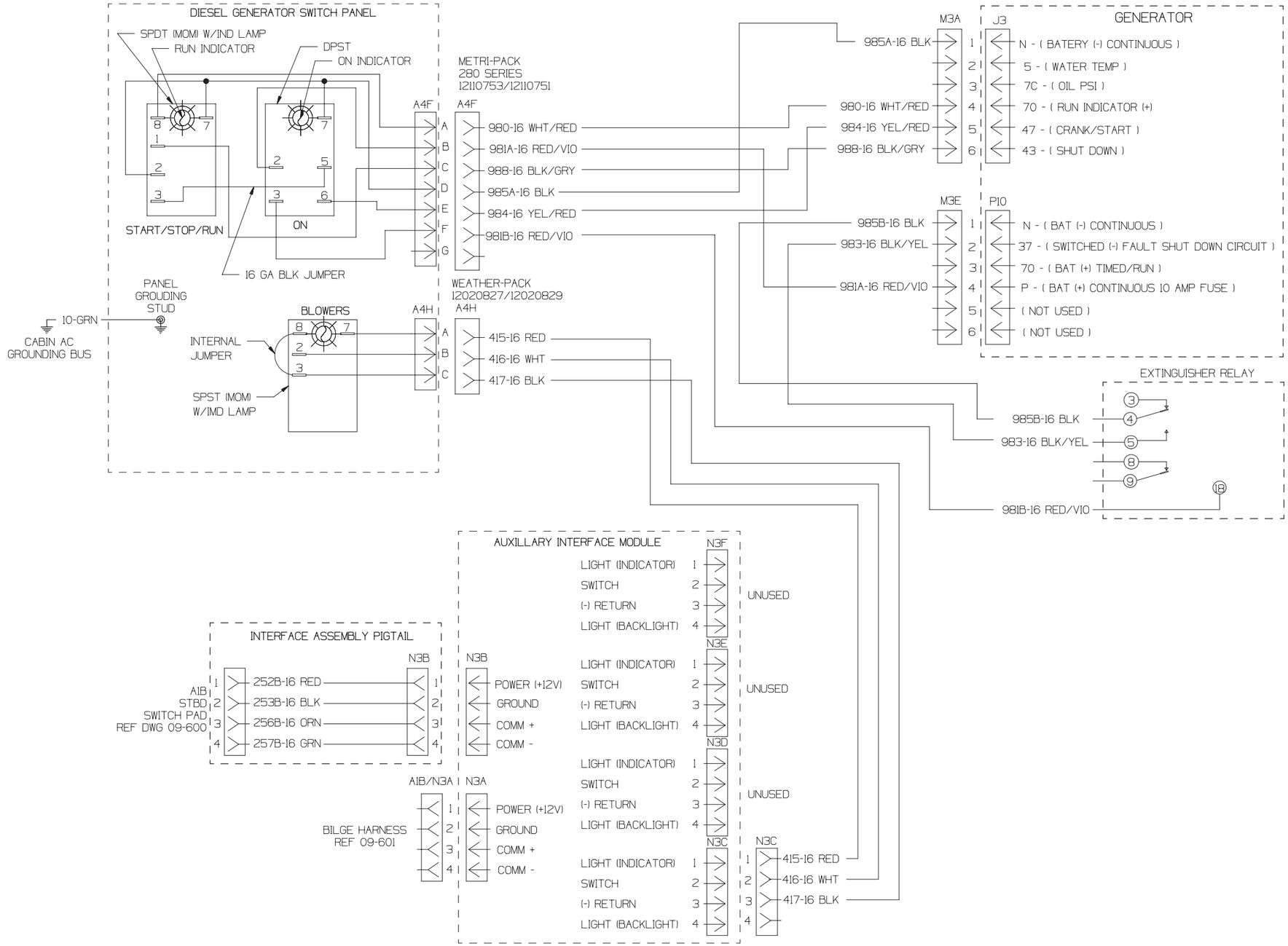

Generator Wiring Diagram (Gas 220V/50Hz Option)
(Fig. 6.28.1) DRAWING NO. 09-633

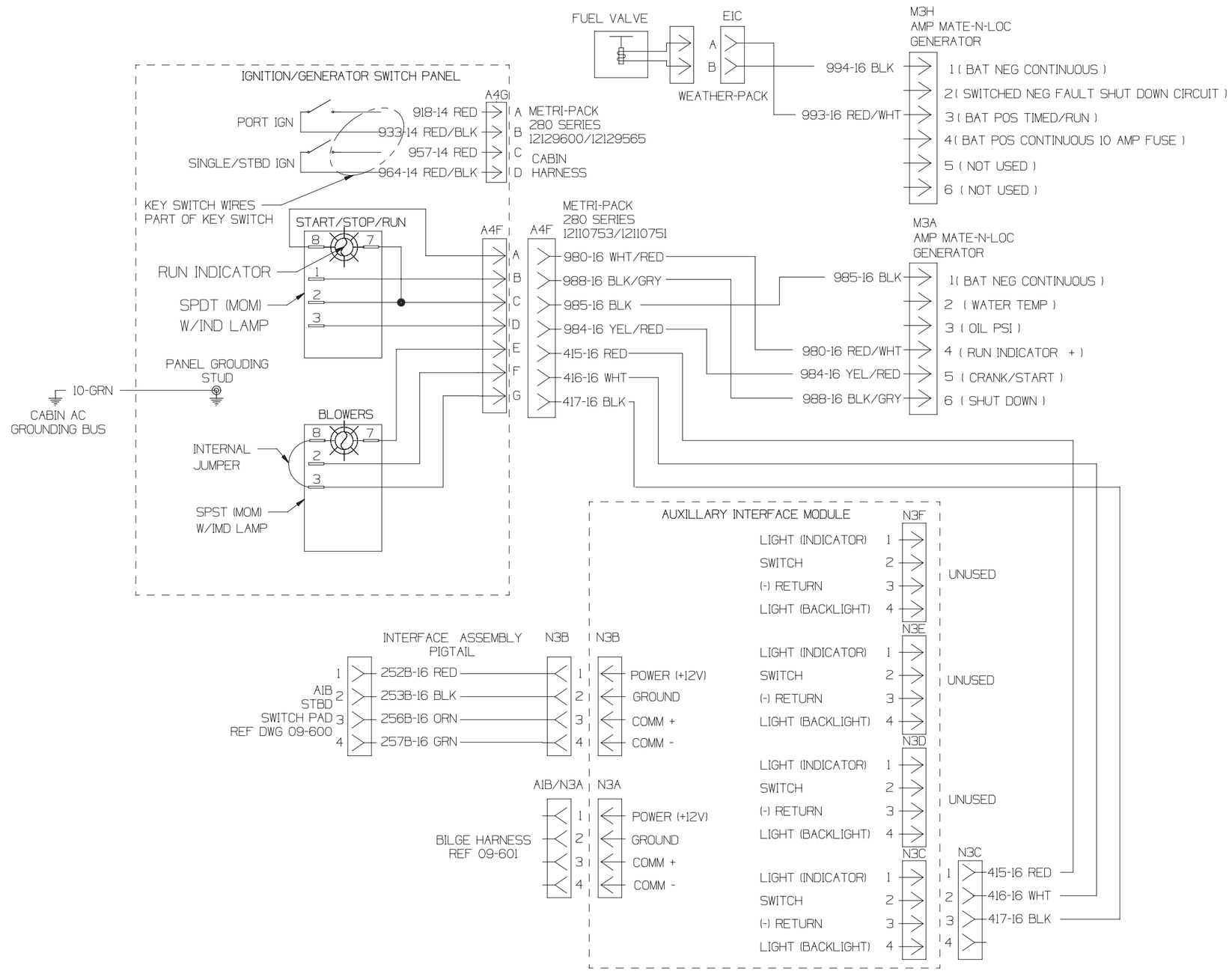

Generator Wiring Diagram
(Fig. 6.29.1) DRAWING NO. 09-634

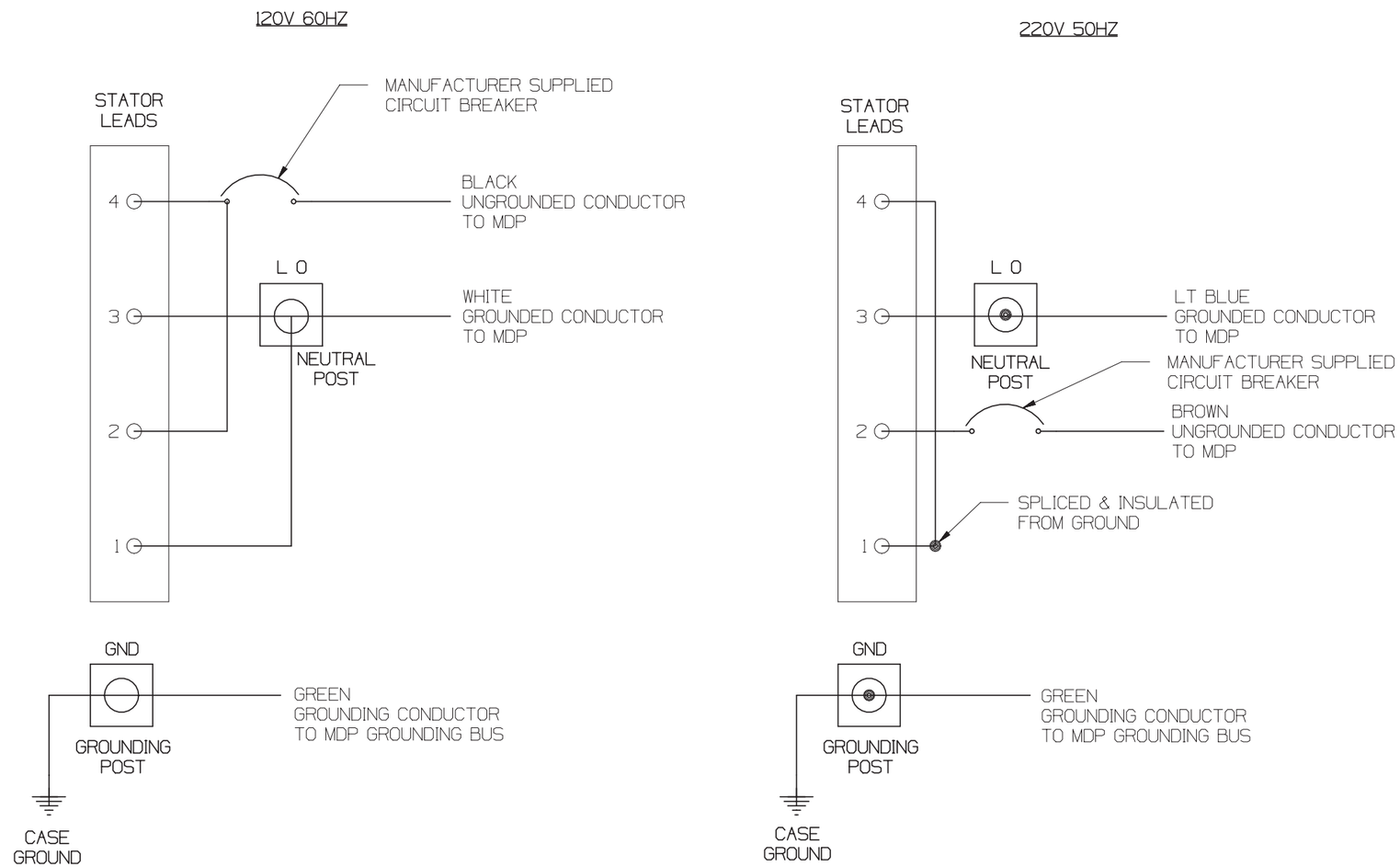

Stereo Wiring Diagram (Standard)
(Fig. 6.30.1) DRAWING NO. 09-640

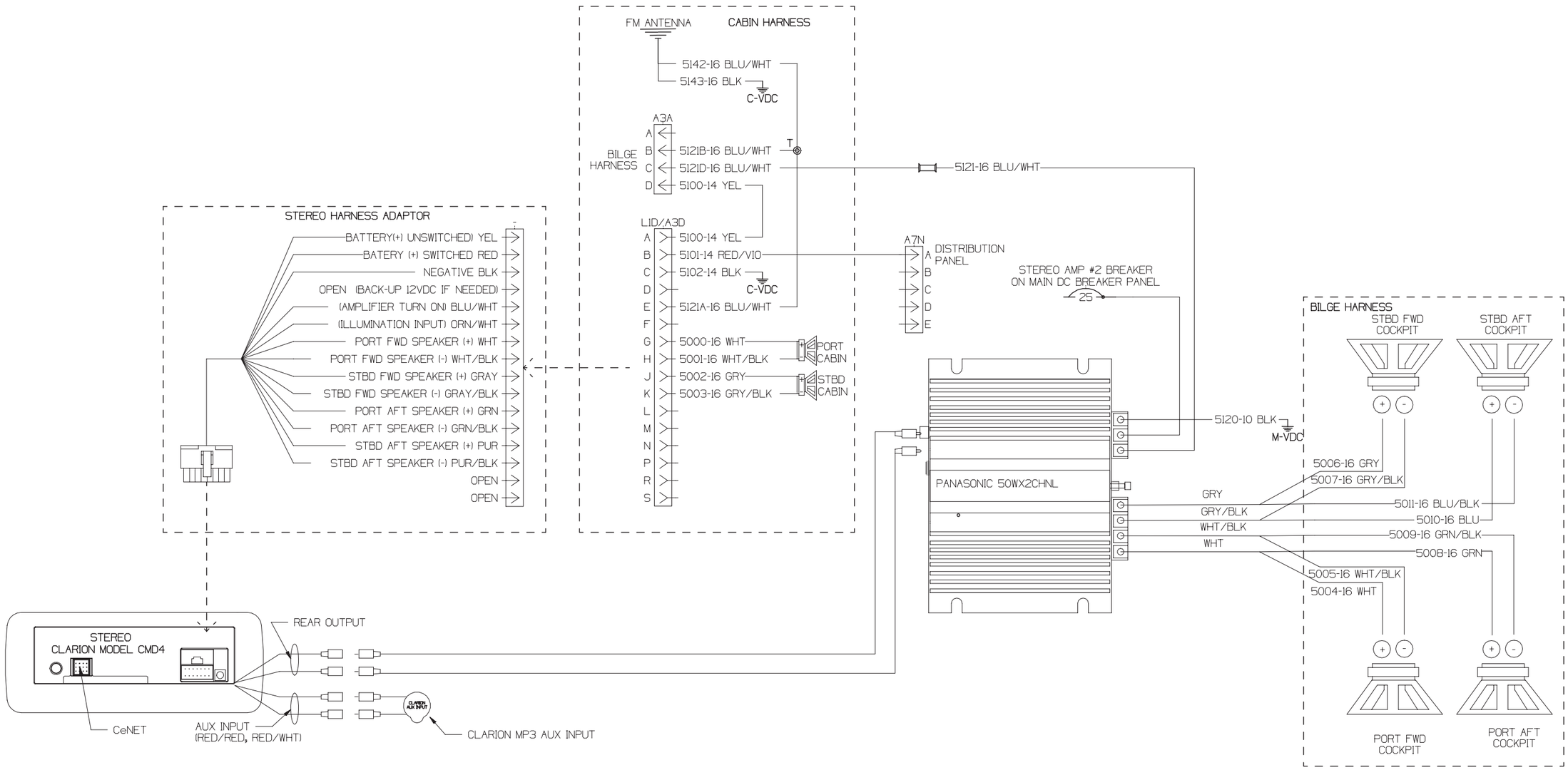

Stereo Wiring Diagram (Premium)
(Fig. 6.31.1) DRAWING NO. 09-642

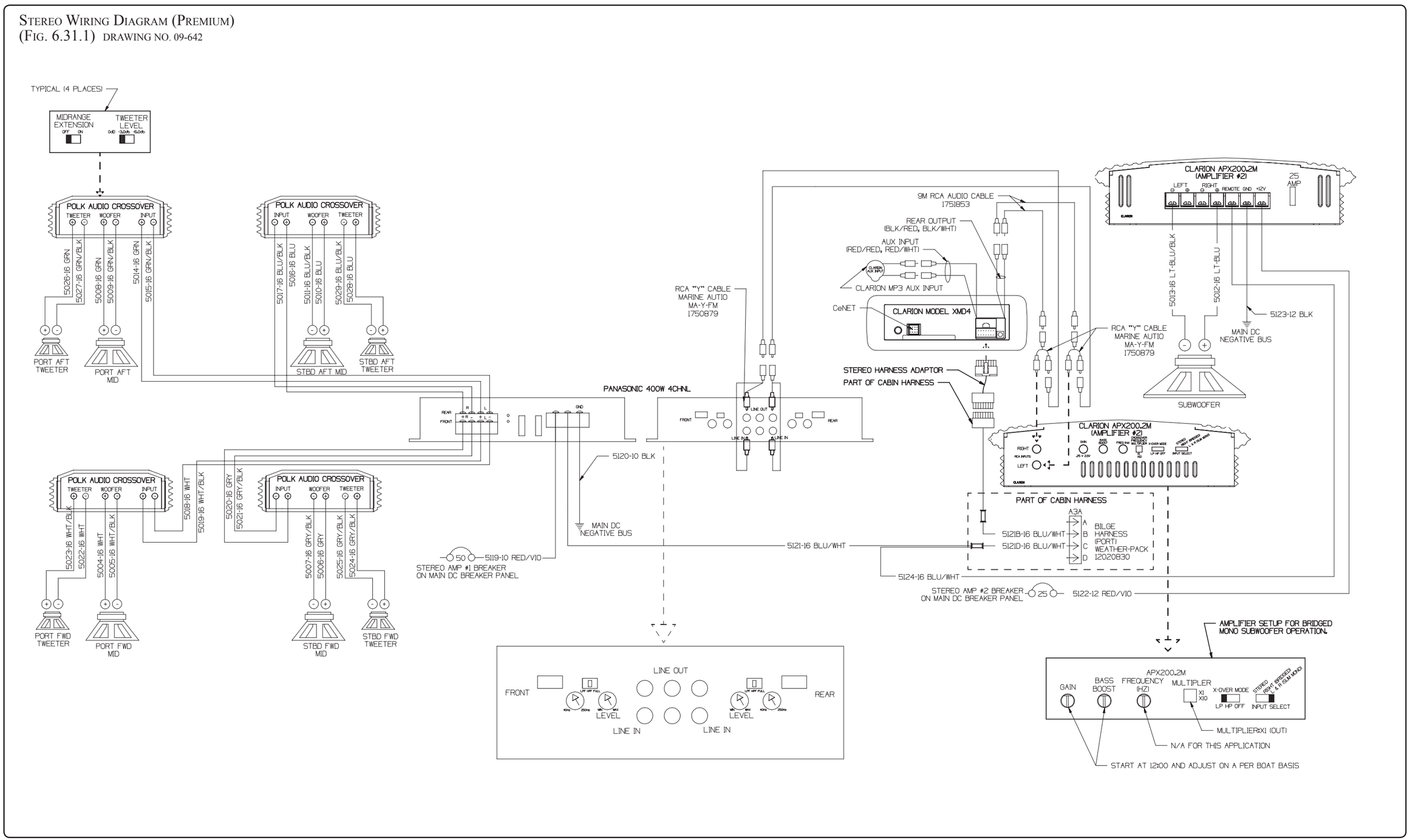

Windlass Wiring Diagram
(Fig. 6.32.1) DRAWING NO. 09-650

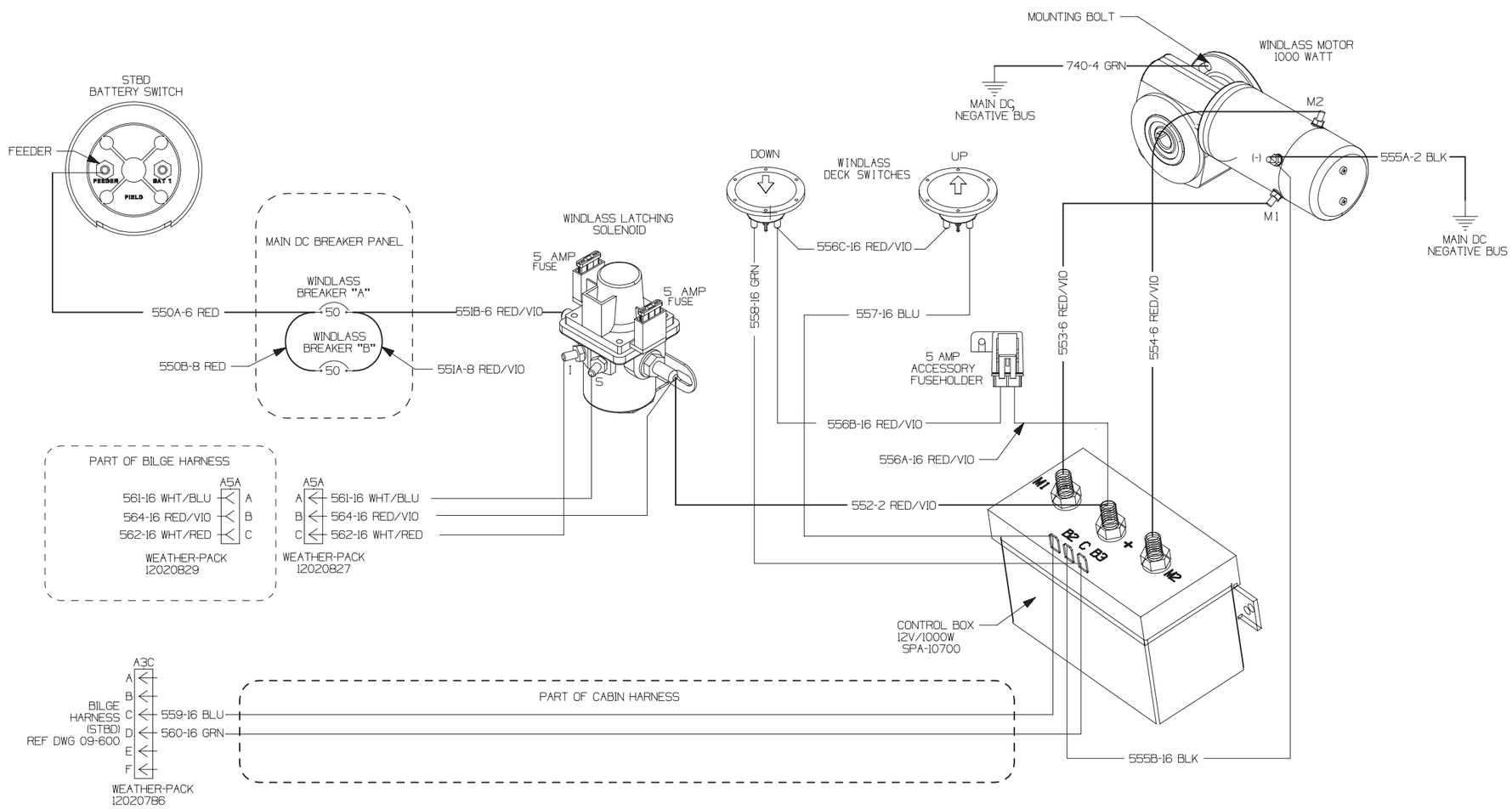

Stove Top Switch Wiring Diagram
(Fig. 6.33.1) DRAWING NO. 09-655

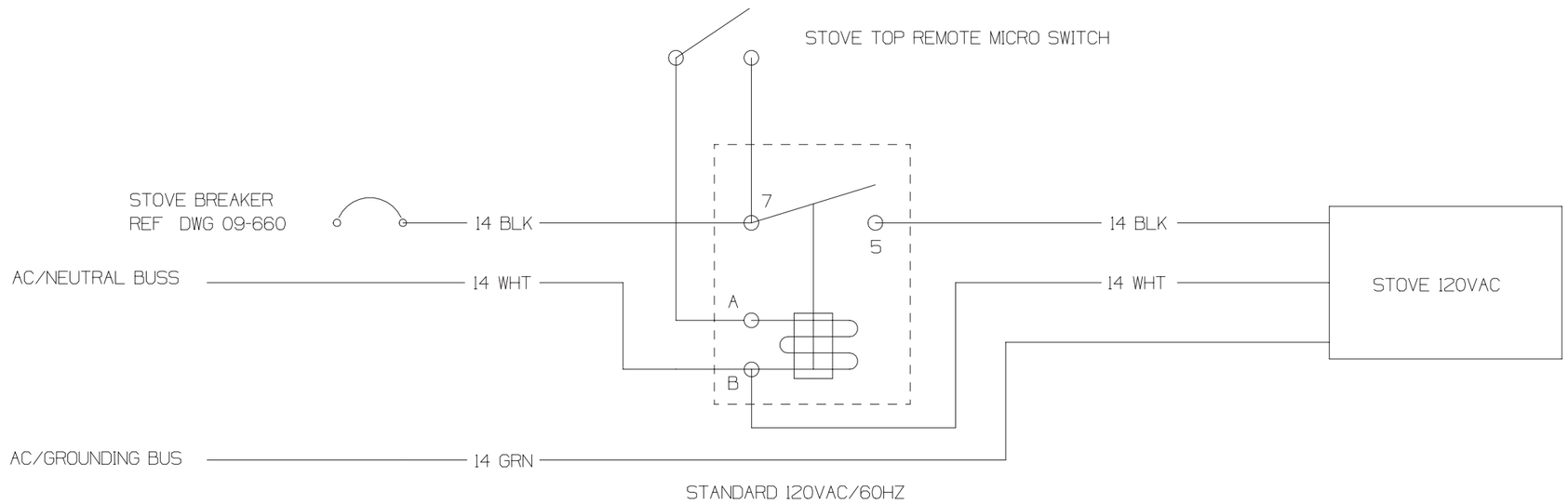

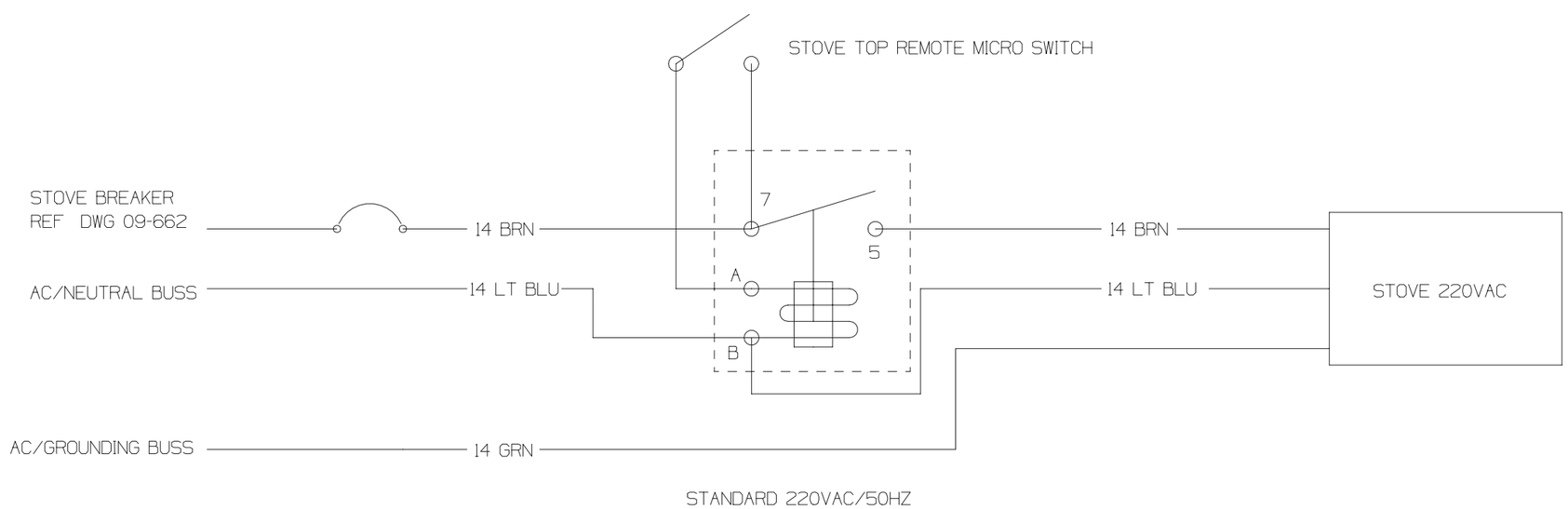

Main Distribution Panel (MDP) Wiring Diagram (1 of 2)
(Fig. 6.34.1) DRAWING NO. 09-660 (1 of 2)

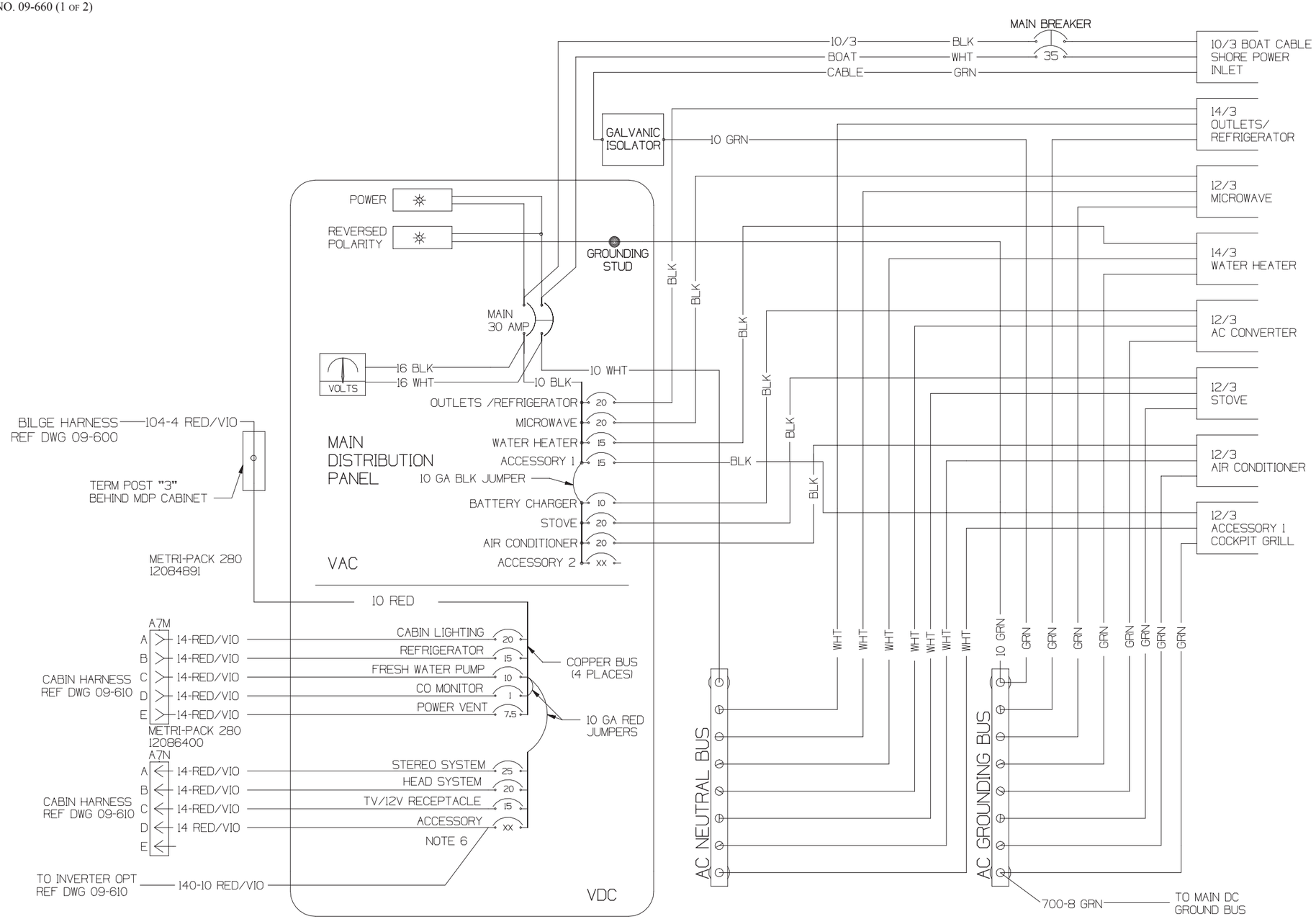

MDP Wiring Diagram (2 of 2)
(Fig. 6.35.1) DRAWING NO. 09-660 (2 of 2)

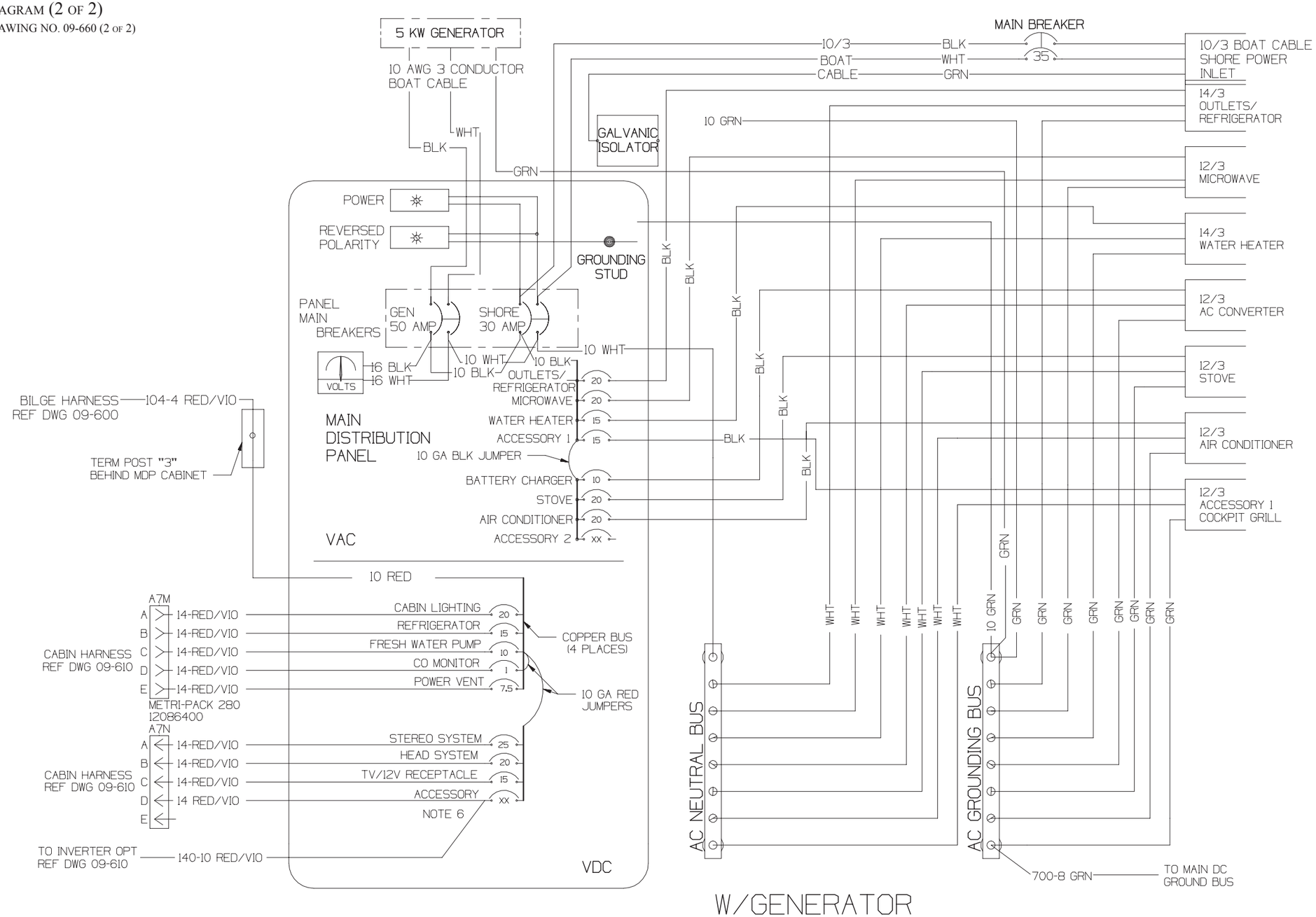

MDP Wiring Diagram (220V/50Hz Option) (1 of 2)
(Fig. 6.36.1) DRAWING NO. 09-662 (1 of 2)

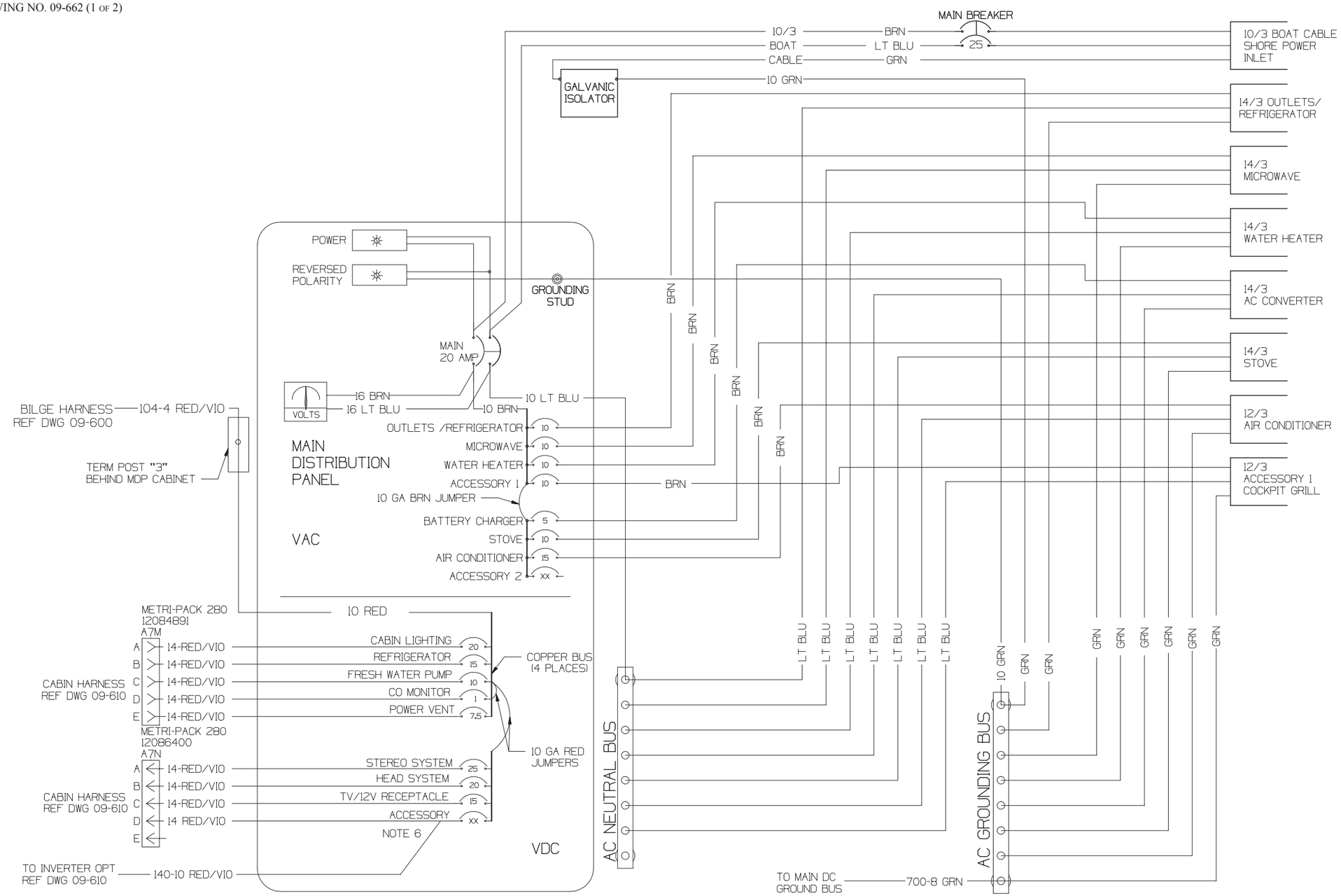

MDP Wiring Diagram (220V/50Hz Option) (2 of 2)
(Fig. 6.37.1) DRAWING NO. 09-662 (2 of 2)

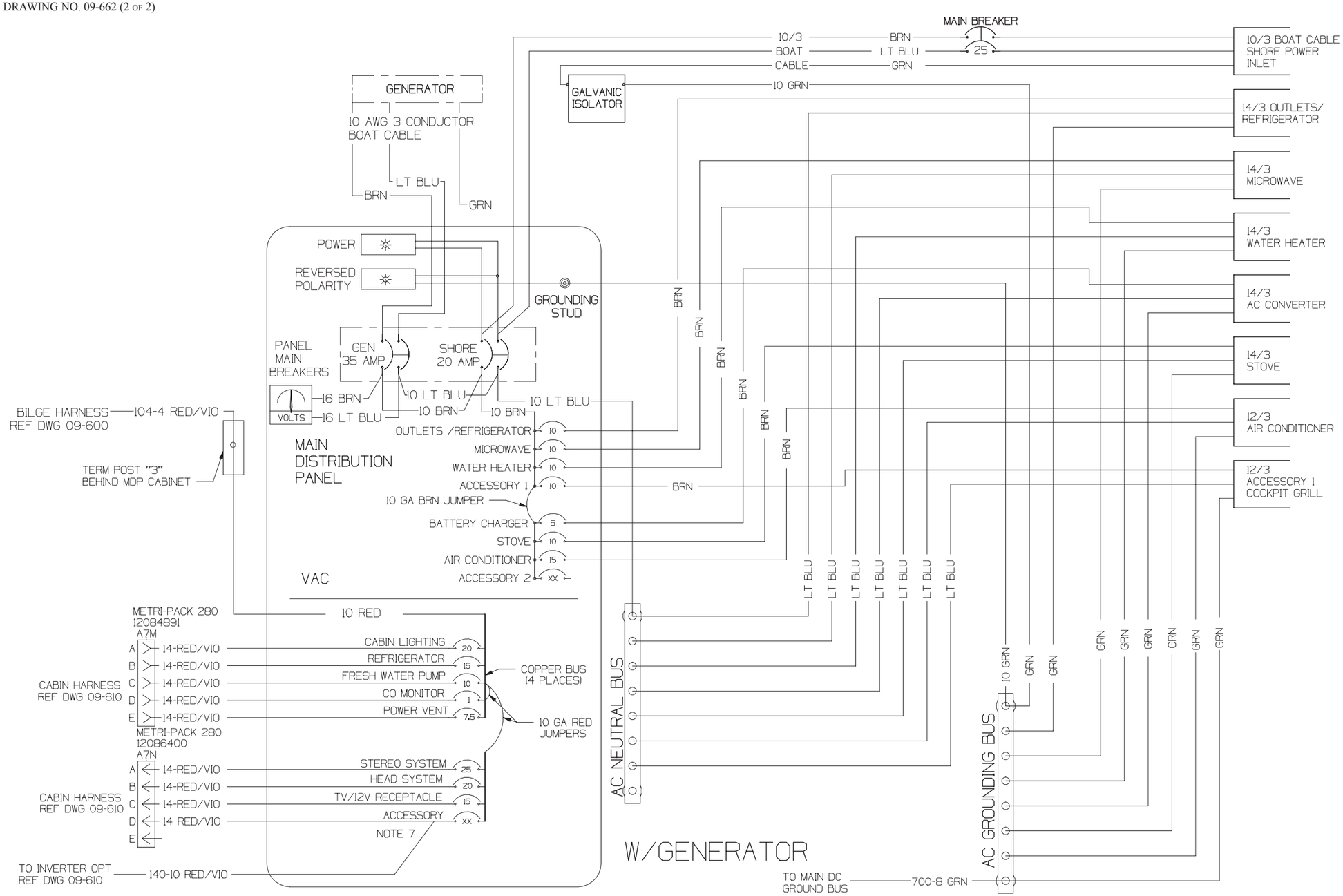

Interconnect Diagram
(Fig. 6.38.1) DRAWING NO. 09-670

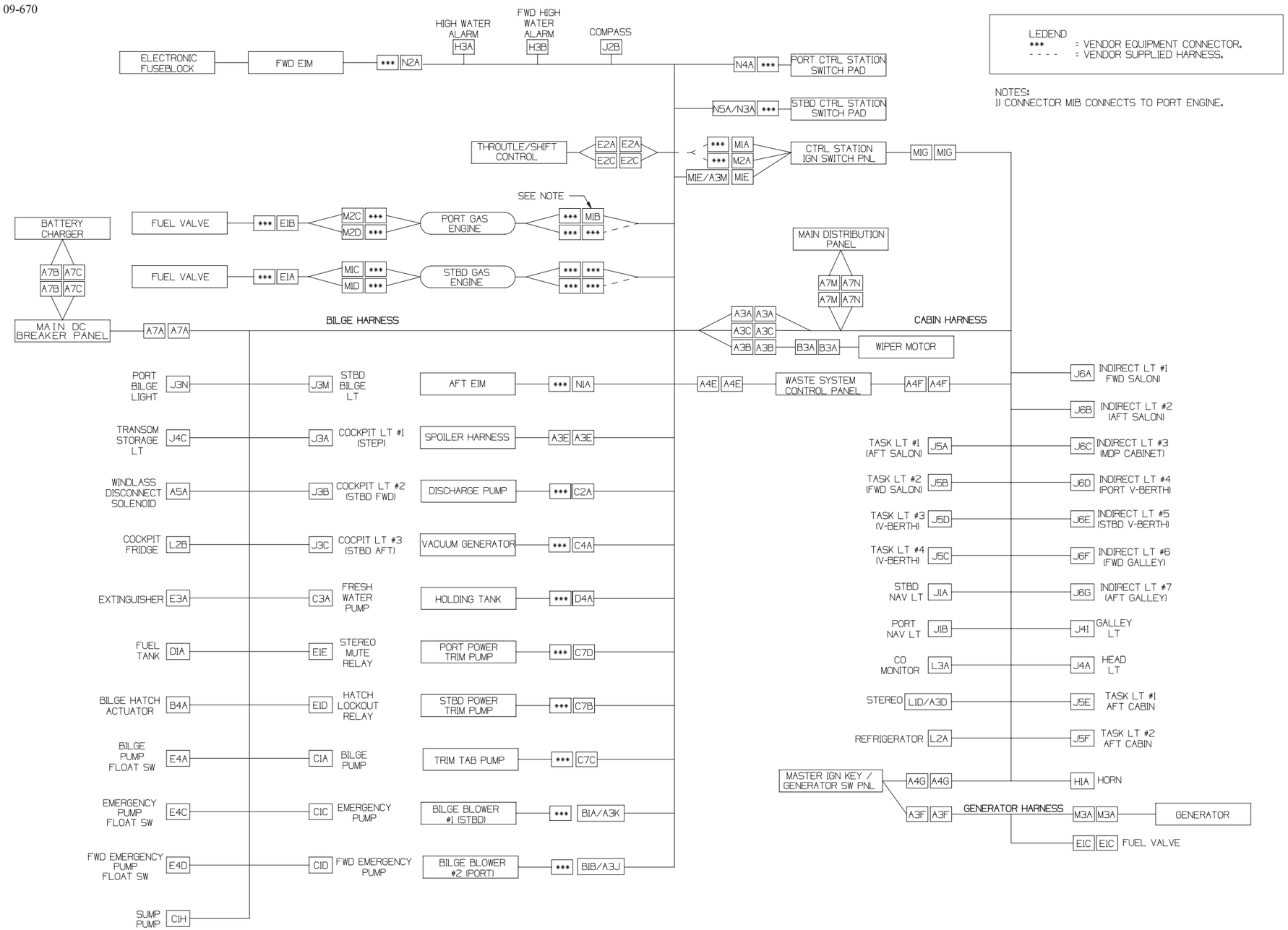

AC System Wiring Diagram (1 of 2)
(Fig. 6.39.1) DRAWING NO. 09-672 (1 of 2)

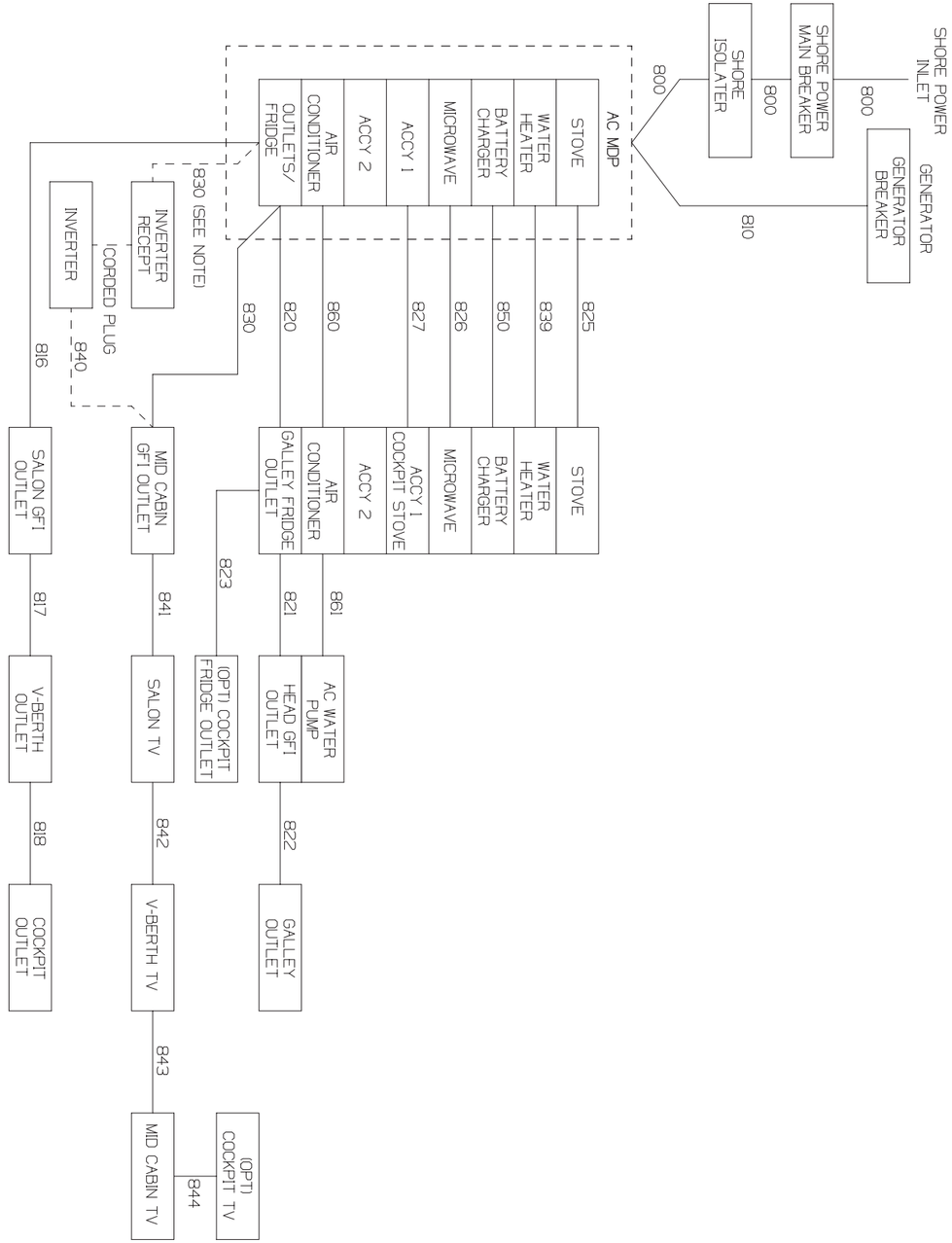

AC System Wiring Diagram (1 of 2)
(Fig. 6.39.1) DRAWING NO. 09-672 (2 of 2)

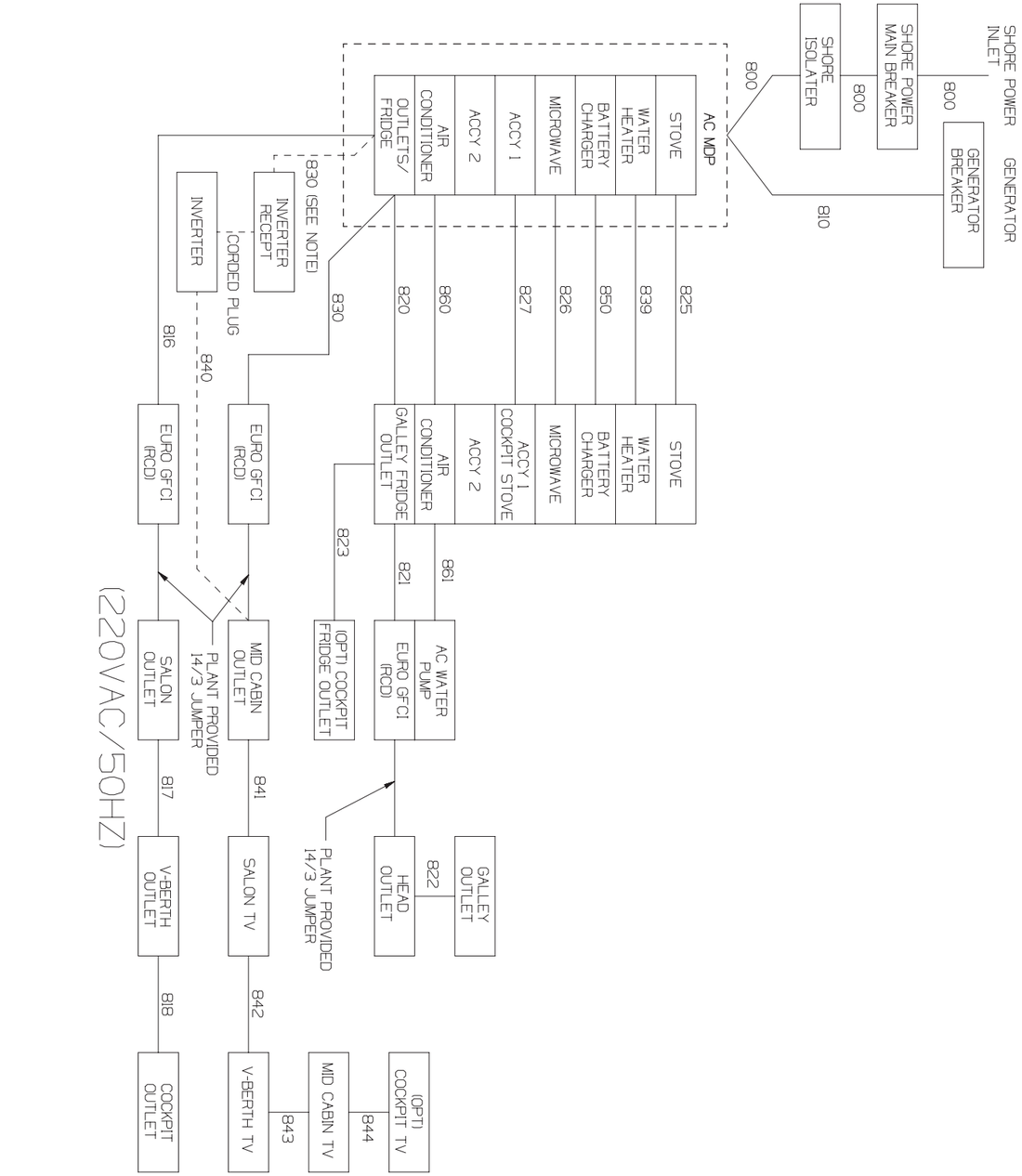

Smartcraft System Diagram (1 of 2)
(Fig. 6.40.1) DRAWING NO. 09-710 (1 of 2)

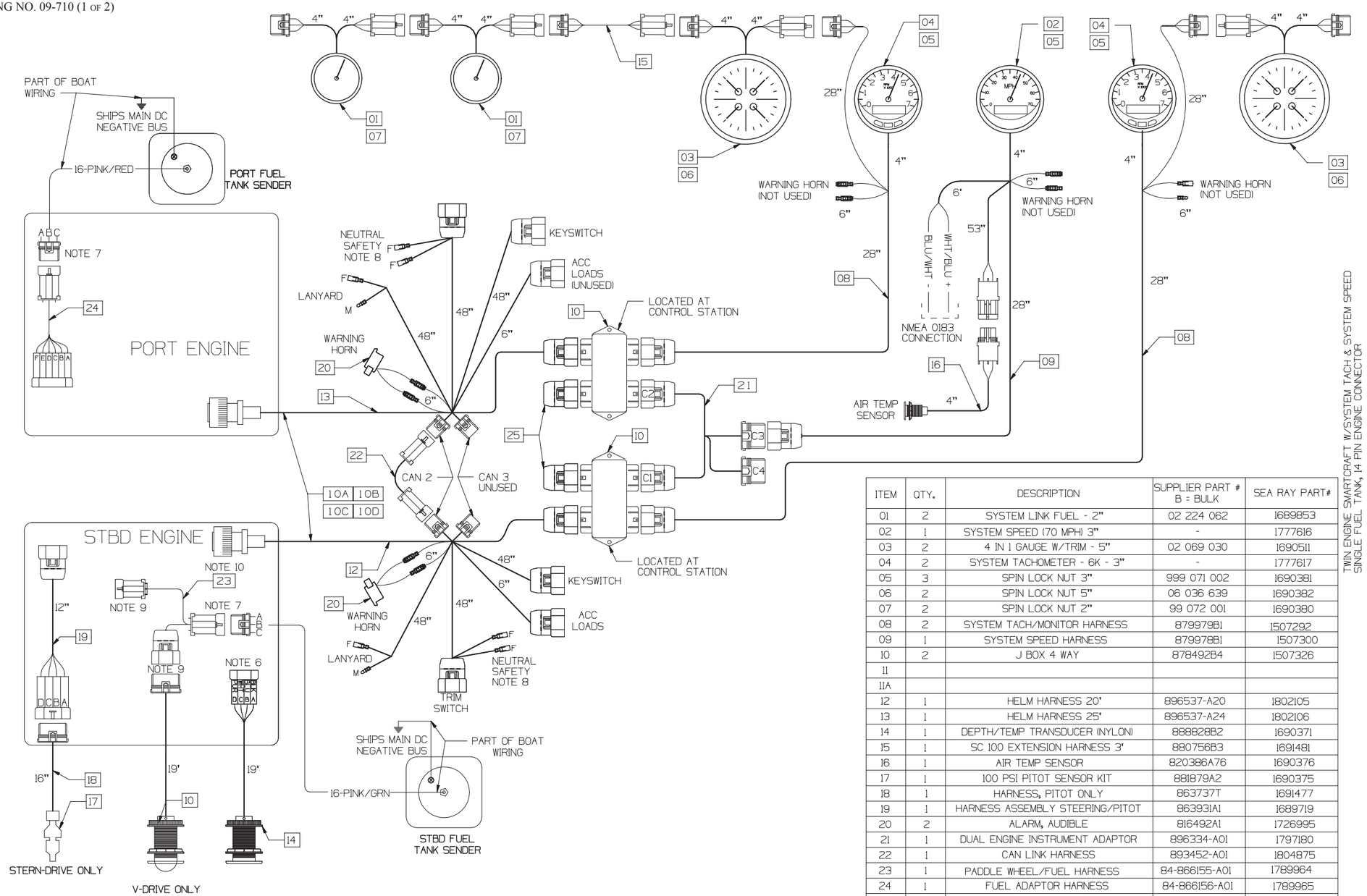

ITEM	QTY.	DESCRIPTION	SUPPLIER PART # B = BULK	SEA RAY PART#
01	2	SYSTEM LINK FUEL - 2"	02 224 062	1689853
02	1	SYSTEM SPEED (70 MPH) 3"	-	1777616
03	2	4 IN 1 GAUGE W/TRIM - 5"	02 069 030	1690511
04	2	SYSTEM TACHOMETER - 6K - 3"	-	1777617
05	3	SPIN LOCK NUT 3"	999 071 002	1690381
06	2	SPIN LOCK NUT 5"	06 036 639	1690382
07	2	SPIN LOCK NUT 2"	99 072 001	1690380
08	2	SYSTEM TACH/MONITOR HARNESS	879979B1	1507292
09	1	SYSTEM SPEED HARNESS	879978B1	1507300
10	2	J BOX 4 WAY	878492B4	1507326
11				
11A				
12	1	HELM HARNESS 20'	896537-A20	1802105
13	1	HELM HARNESS 25'	896537-A24	1802106
14	1	DEPTH/TEMP TRANSDUCER (NYLON)	888828B2	1690371
15	1	SC 100 EXTENSION HARNESS 3'	880756B3	1691481
16	1	AIR TEMP SENSOR	820386A76	1690376
17	1	100 PSI PITOT SENSOR KIT	881879A2	1690375
18	1	HARNESS, PITOT ONLY	863737T	1691477
19	1	HARNESS ASSEMBLY STEERING/PITOT	863931A1	1689719
20	2	ALARM, AUDIBLE	816492A1	1726995
21	1	DUAL ENGINE INSTRUMENT ADAPTOR	896334-A01	1797180
22	1	CAN LINK HARNESS	893452-A01	1804875
23	1	PADDLE WHEEL/FUEL HARNESS	84-866155-A01	1789964
24	1	FUEL ADAPTOR HARNESS	84-866156-A01	1789965
25	2	WEATHER CAP	859318T-2	1778071

Smartcraft System Diagram (2 of 2)
(Fig. 6.41.1) DRAWING NO. 09-710 (2 of 2)

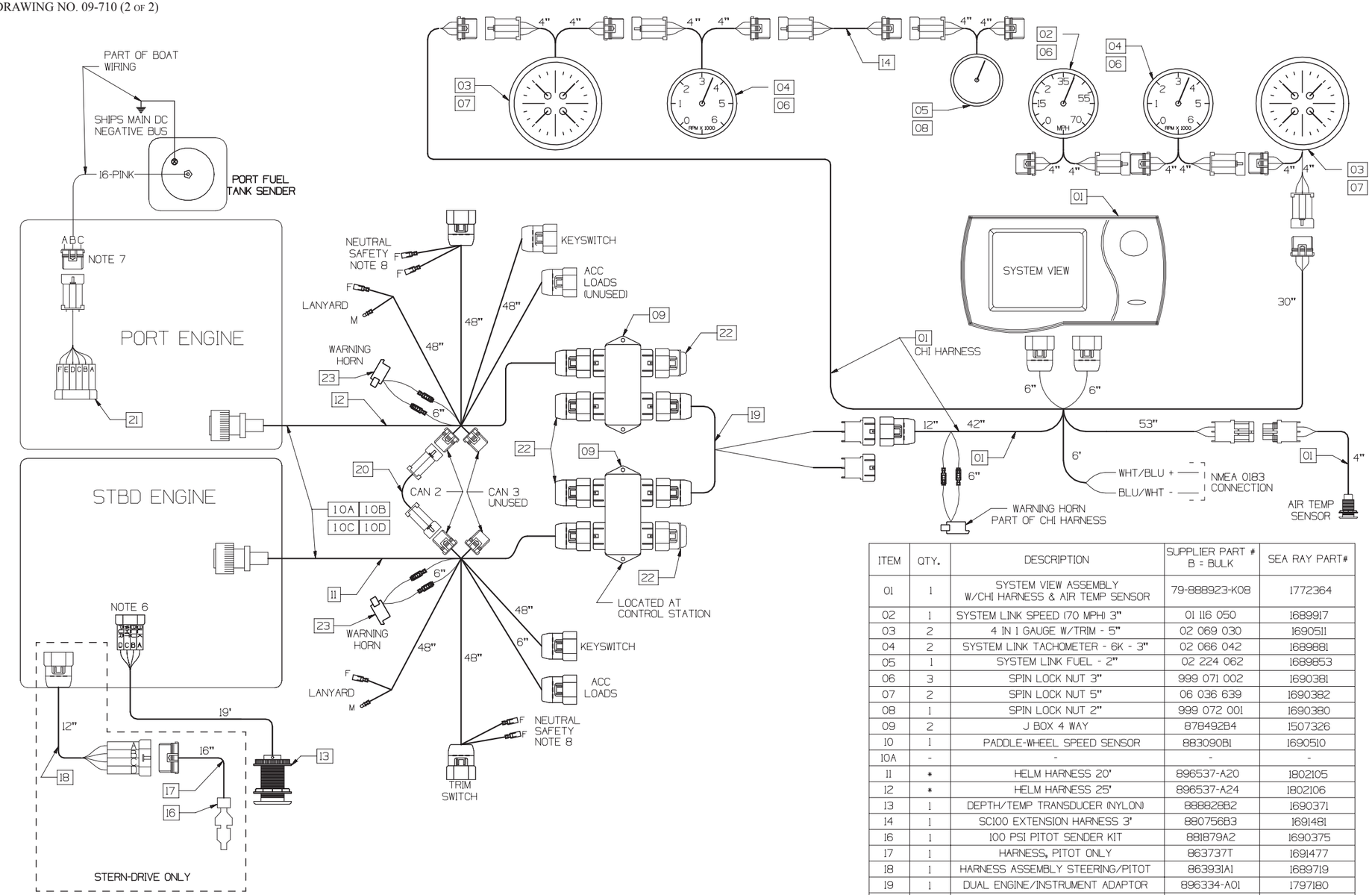

ITEM	QTY.	DESCRIPTION	SUPPLIER PART # B = BULK	SEA RAY PART#
01	1	SYSTEM VIEW ASSEMBLY W/CHI HARNESS & AIR TEMP SENSOR	79-888923-K08	1772364
02	1	SYSTEM LINK SPEED (70 MPH) 3"	01 116 050	1689917
03	2	4 IN 1 GAUGE W/TRIM - 5"	02 069 030	1690511
04	2	SYSTEM LINK TACHOMETER - 6K - 3"	02 066 042	1689881
05	1	SYSTEM LINK FUEL - 2"	02 224 062	1689853
06	3	SPIN LOCK NUT 3"	999 071 002	1690381
07	2	SPIN LOCK NUT 5"	06 036 639	1690382
08	1	SPIN LOCK NUT 2"	999 072 001	1690380
09	2	J BOX 4 WAY	878492B4	1507326
10	1	PADDLE-WHEEL SPEED SENSOR	883090B1	1690510
10A	-	-	-	-
11	*	HELM HARNESS 20'	896537-A20	1802105
12	*	HELM HARNESS 25'	896537-A24	1802106
13	1	DEPTH/TEMP TRANSDUCER (NYLON)	888828B2	1690371
14	1	SC100 EXTENSION HARNESS 3'	880756B3	1691481
16	1	100 PSI PITOT SENDER KIT	881879A2	1690375
17	1	HARNESS, PITOT ONLY	863737T	1691477
18	1	HARNESS ASSEMBLY STEERING/PITOT	863931A1	1689719
19	1	DUAL ENGINE/INSTRUMENT ADAPTOR	896334-A01	1797180
20	1	CAN LINK HARNESS	893452-A01	1804875
21	1	FUEL ADAPTOR HARNESS	84-866156-A01	1789965
22	2	WEATHER CAP	859318T-2	1778071
23	2	ALARM, AUDIBLE	816492A1	1726995

Satellite Stereo Diagram
(Fig. 6.42.1) DRAWING NO. 09-715

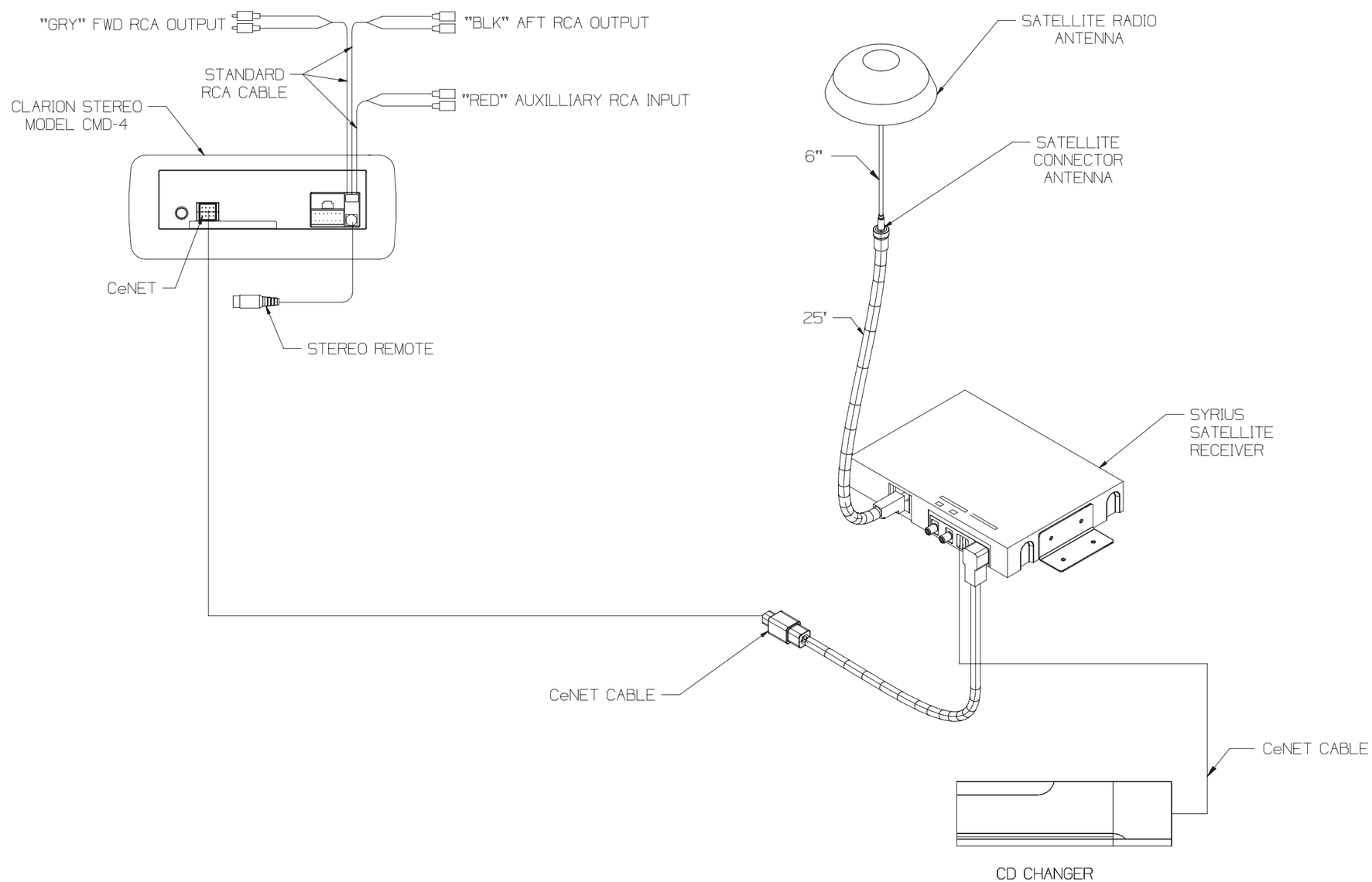

14 Pin Smart Craft Wiring Diagram (1 of 2)
(Fig. 6.43.1) DRAWING NO. 09-672 (1 of 2)

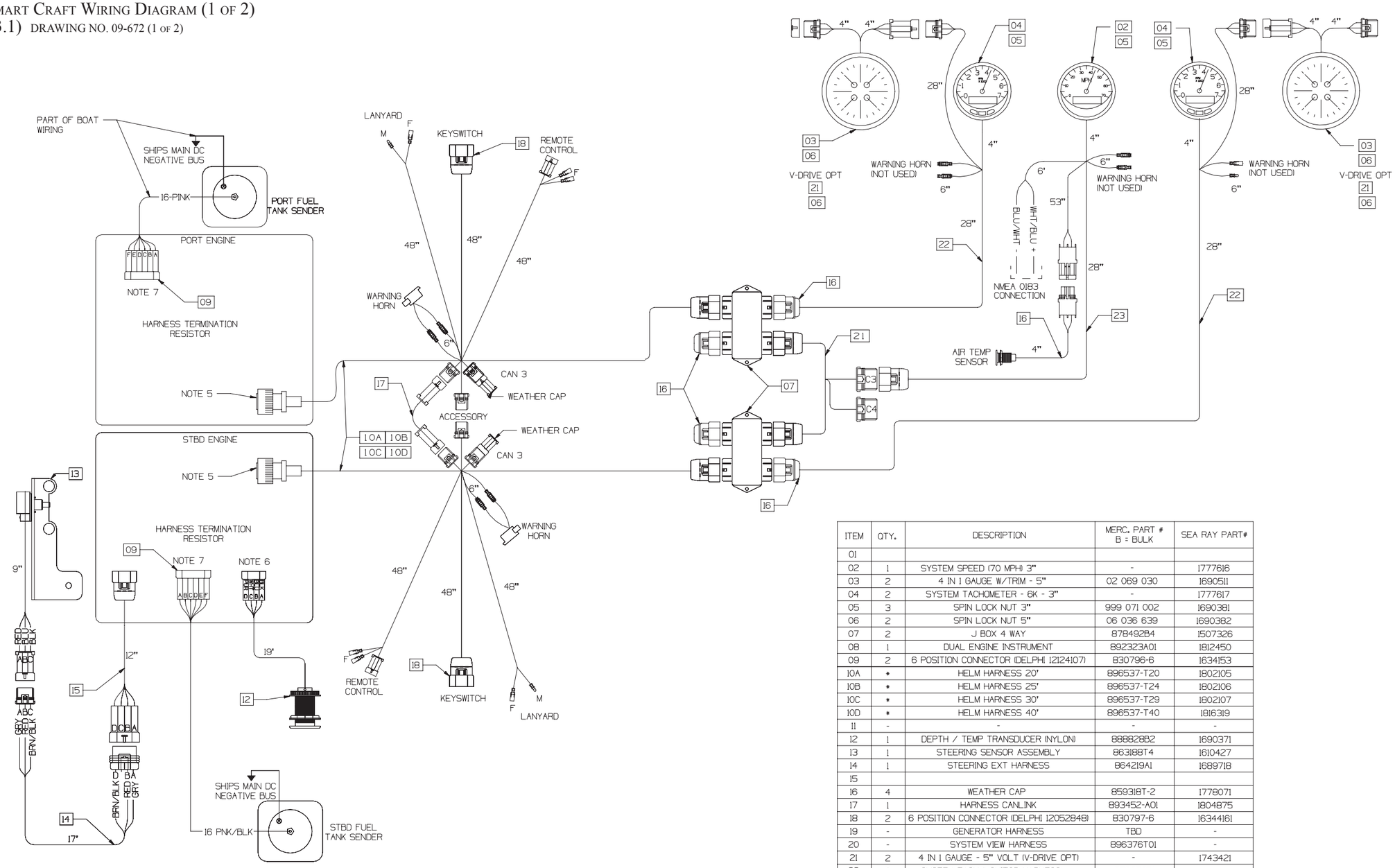

ITEM	QTY.	DESCRIPTION	MERC. PART # B = BULK	SEA RAY PART#
01				
02	1	SYSTEM SPEED (70 MPH) 3"	-	1777616
03	2	4 IN 1 GAUGE W/TRIM - 5"	02 069 030	1690511
04	2	SYSTEM TACHOMETER - 6K - 3"	-	1777617
05	3	SPIN LOCK NUT 3"	999 071 002	1690381
06	2	SPIN LOCK NUT 5"	06 036 639	1690382
07	2	J BOX 4 WAY	878492B4	1507326
08	1	DUAL ENGINE INSTRUMENT	892323A01	1812450
09	2	6 POSITION CONNECTOR (DELPHI 12124107)	830796-6	1634153
10A	*	HELM HARNESS 20'	896537-T20	1802105
10B	*	HELM HARNESS 25'	896537-T24	1802106
10C	*	HELM HARNESS 30'	896537-T29	1802107
10D	*	HELM HARNESS 40'	896537-T40	1816319
11	-	-	-	-
12	1	DEPTH / TEMP TRANSDUCER (NYLON)	888828B2	1690371
13	1	STEERING SENSOR ASSEMBLY	863188T4	1610427
14	1	STEERING EXT HARNESS	864219A1	1689718
15				
16	4	WEATHER CAP	859318T-2	1778071
17	1	HARNESS CANLINK	893452-A01	1804875
18	2	6 POSITION CONNECTOR (DELPHI 12052848)	830797-6	1634161
19	-	GENERATOR HARNESS	TBD	-
20	-	SYSTEM VIEW HARNESS	896376T01	-
21	2	4 IN 1 GAUGE - 5" VOLT (V-DRIVE OPT)	-	1743421
22	2	SYSTEM TACH/MONITOR HARNESS	879979B1	1507292
23	1	SYSTEM SPEED HARNESS	879978B1	1507300

* QUANTITY DETERMINED BY BOM

14 Pin Smart Craft Wiring Diagram (2 of 2)
(Fig. 6.44.1) Drawing No. 09-672 (2 of 2)

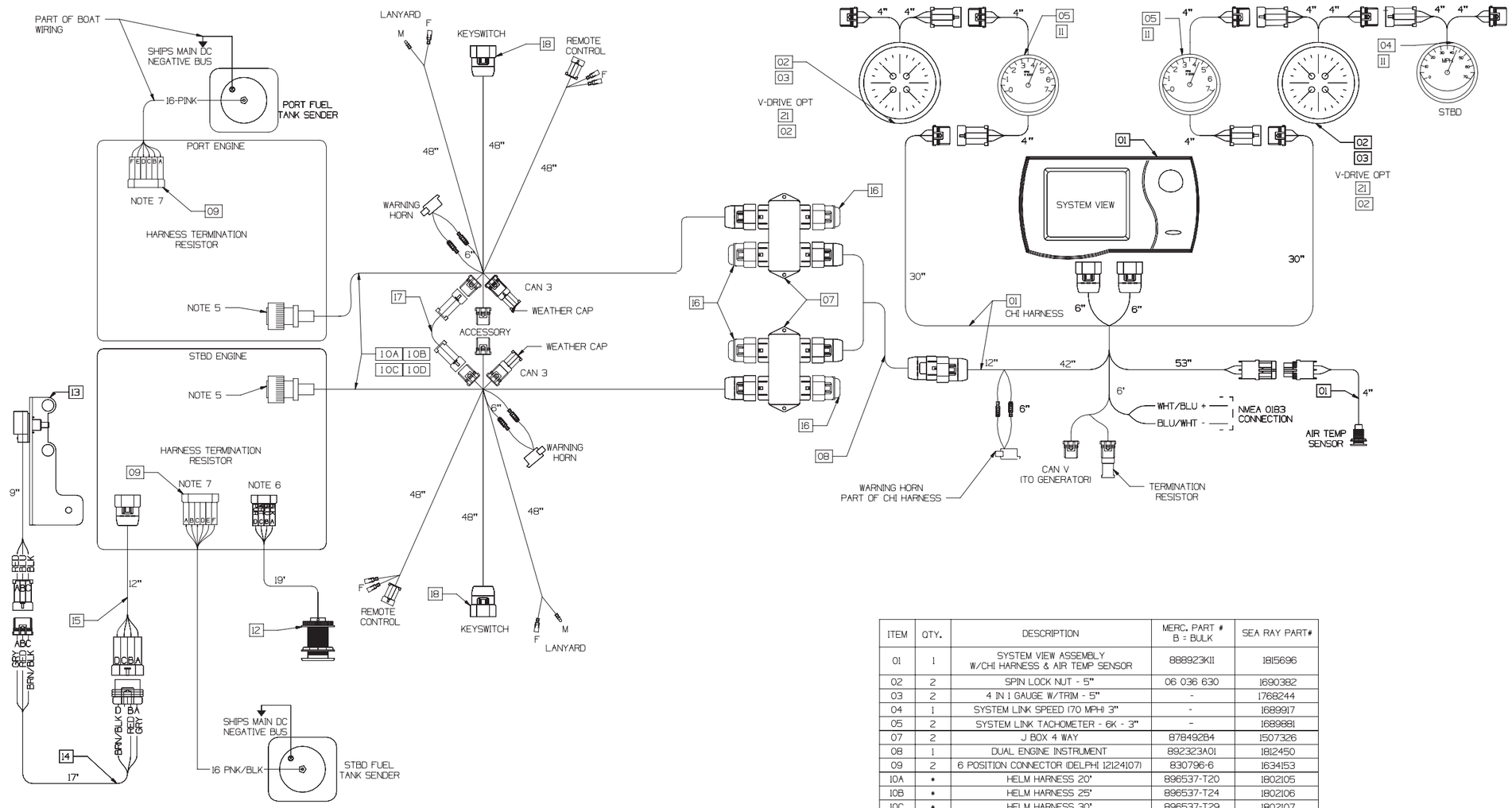

ITEM	QTY.	DESCRIPTION	MERC. PART # B = BULK	SEA RAY PART#
01	1	SYSTEM VIEW ASSEMBLY W/CHI HARNESS & AIR TEMP SENSOR	888923K11	1815696
02	2	SPIN LOCK NUT - 5"	06 036 630	1690382
03	2	4 IN 1 GAUGE W/TRIM - 5"	-	1768244
04	1	SYSTEM LINK SPEED (70 MPH) 3"	-	1689917
05	2	SYSTEM LINK TACHOMETER - 6K - 3"	-	1689881
07	2	J BOX 4 WAY	878492B4	1507326
08	1	DUAL ENGINE INSTRUMENT	892323A01	1812450
09	2	6 POSITION CONNECTOR (DELPHI 12124107)	830796-6	1634153
10A	*	HELM HARNESS 20'	896537-T20	1802105
10B	*	HELM HARNESS 25'	896537-T24	1802106
10C	*	HELM HARNESS 30'	896537-T29	1802107
10D	*	HELM HARNESS 40'	896537-T40	1816319
11	3	SPIN LOCK NUT 3"	999 071 002	1690381
12	1	DEPTH / TEMP TRANSDUCER (NYLON)	888828B2	1690371
13	1	STEERING SENSOR ASSEMBLY	863188T4	1610427
14	1	STEERING EXT HARNESS	864219A1	1689718
15	1	STEERING PIGTAIL (SB ONLY)	863931A1	1689719
16	4	WEATHER CAP	859318T-2	1778071
17	1	HARNESS CANLINK	893452-A01	1804875
18	2	6 POSITION CONNECTOR (DELPHI 12052848)	830797-6	1634161
19	-	GENERATOR HARNESS	TBD	-
20	-	SYSTEM VIEW HARNESS	896376T01	-
21	2	4 IN 1 GAUGE - 5" VOLT (V-DRIVE OPT)	-	1743421

* QUANTITY DETERMINED BY BOM

Northstar 6000i System Diagram
(Fig. 6.45.1) drawing no. 09-640 (1 of 2) Revision 2

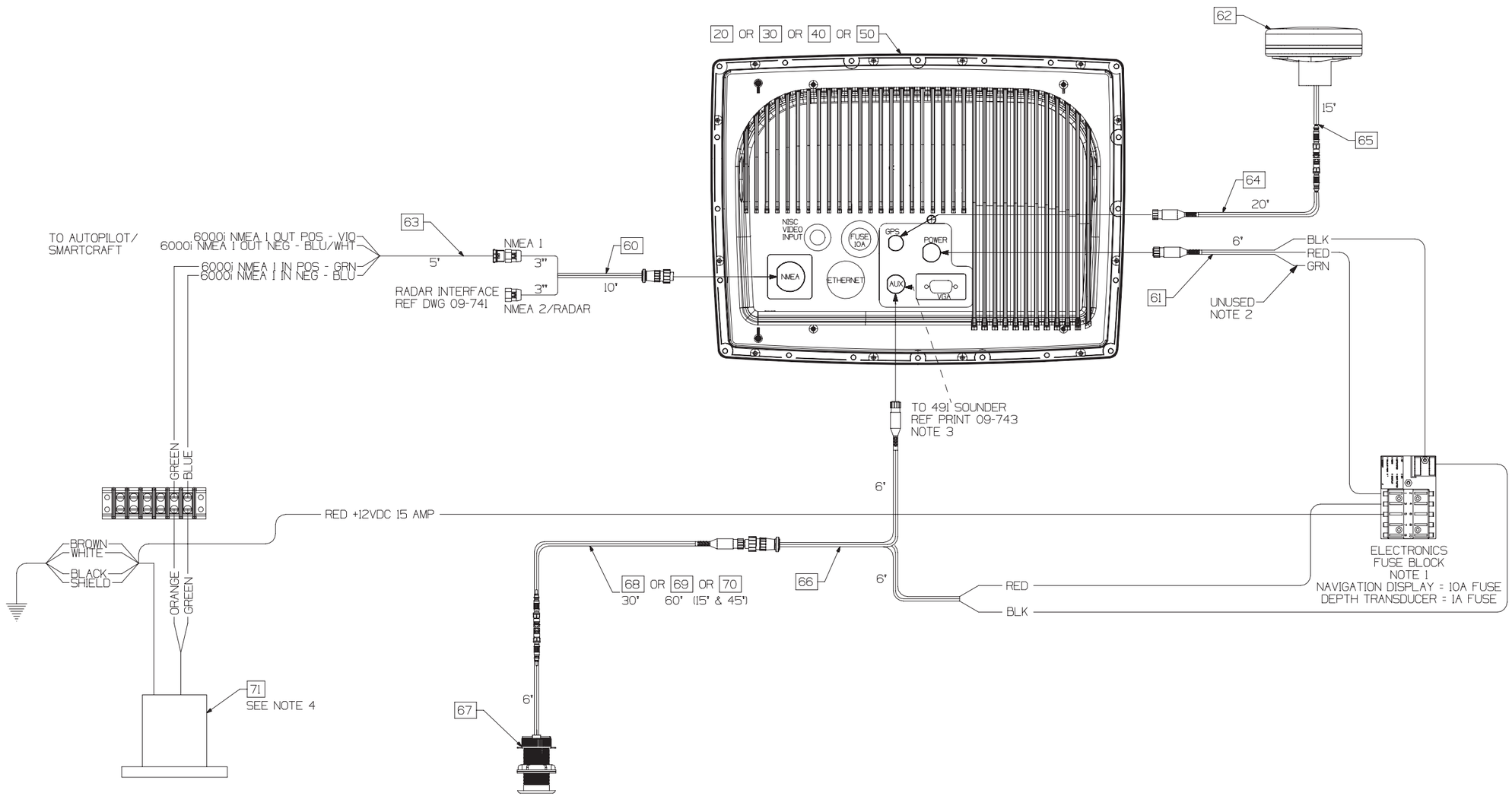

Northstar 6000i 2KW Closed Dome Radar System
(Fig. 6.46.1) drawing no. 09-744

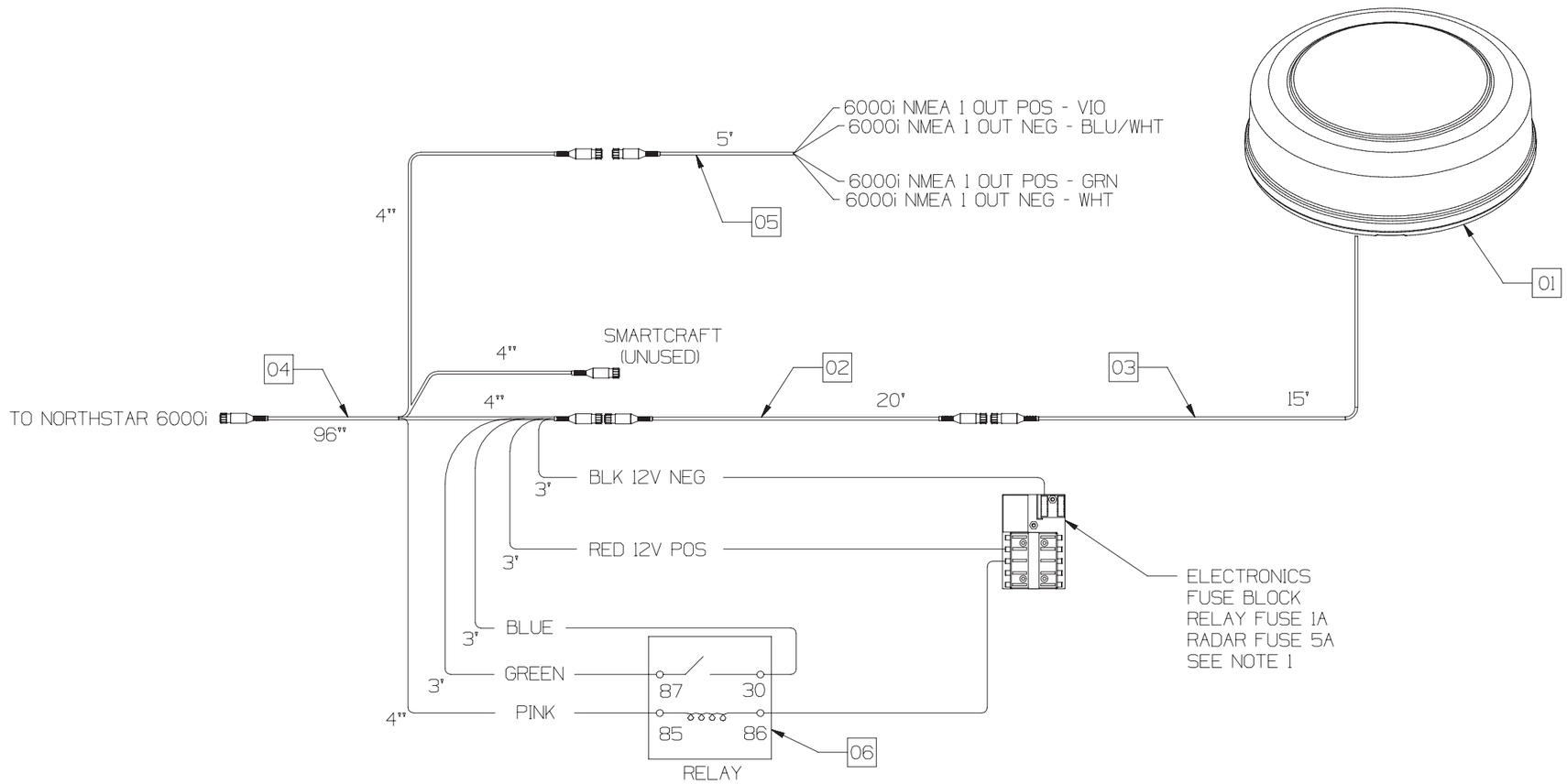

Item #	MRP #	Vendor Part Number	Sea Ray - AS400 Description
01*	1807864	R2D-A	RADAR, NRTHSTR 2KW CLOSED DOME
02*	1807867	WC273-5	HARNESS, RADAR CBL EXT 16'NRTHSTR 6000I 2KW
03*	1807868	WC274-5	HARNESS, RADAR CBL 16'NRTHSTR 6000I 2KW
04*	1807912	WA215SR-C	HARNESS, RADAR CBL INTERFACE NRTHSTR 6000I 2KW
05*	1795140	WA598-A	HARNESS, NRTHSTR 6000I NMEA I/O CBL
06	1795967	RELAY-IK	RELAY, NORTHSTAR RADAR KIT
NOT SHOWN	1796308	RAD2KDBG-A	RADAR, NRTHSTR RADOME 2KW CMPLT

* INCLUDED IN THE COMPLETE PACKAGE PART NUMBER

Northstar Black Box VHF System
(Fig. 6.47.1) DRAWING NO. 09-645

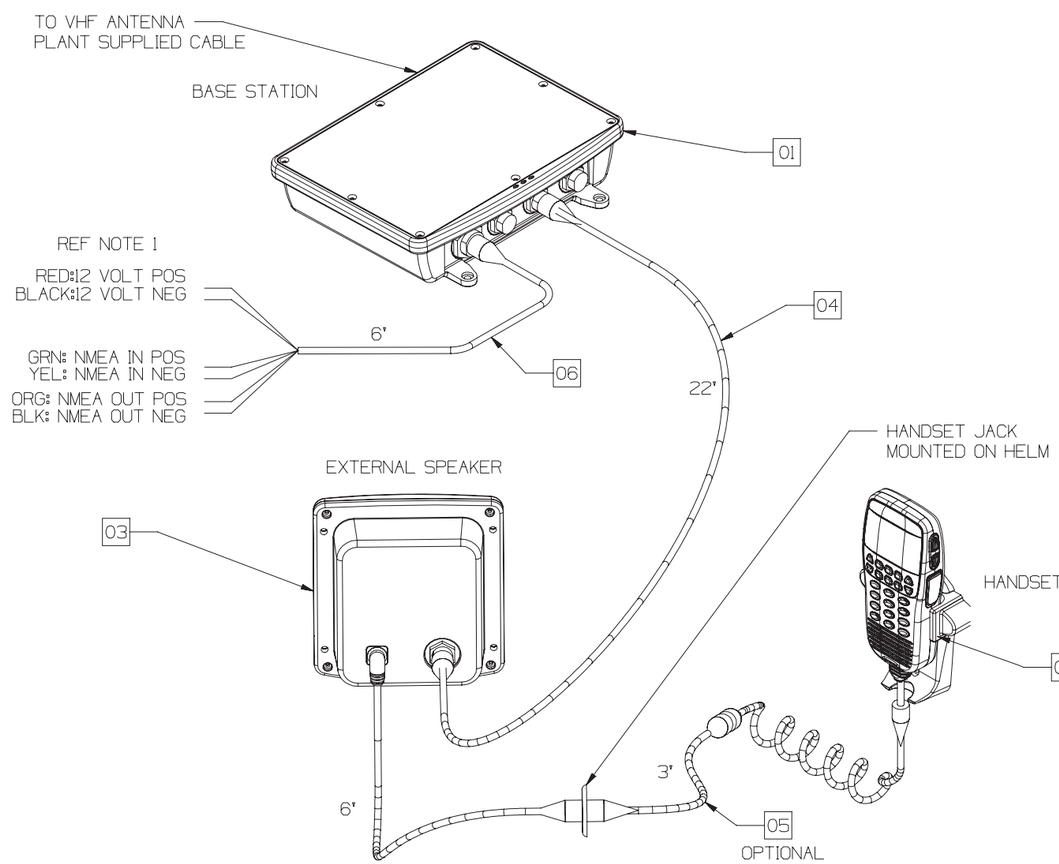

Item #	MRP #	Vendor Part Number	Sea Ray - AS400 Description
01*	1807908	NSSVHF	BASE, PLAS NRTHSTR VHF RADIO BLKBOX
02*	1807910	NSHST-VHF	RADIO, VHF NRTHSTR BLKBOX HANDSET
03*	1807911	NSSPK-VHF	SPEAKER, REMOTE NRTHSTR VHF BLKBOX
04*	1807869	WC278-7-7M	HARNESS, NRTHSTR VHF BLKBX TO SPKR CBL 72"
05	1807870	WC279-1-1M	HARNESS, NRTHSTR VHF BLKBX SPKR-HNDSET EXT 3'
06*	1807871	WA101-VHF	HARNESS, NRTHSTR VHF BLKBX PWR CBL 6'
NOT SHOWN	1807449	NS100SS	RADIO, VHF NORTHSTAR NS100 (COMPLETE PACKAGE)

* INCLUDED IN COMPLETE PACKAGE PART #1807449

Mercury Digital Throttle & Shift Control (DTS) System (1 of 2)
(Fig. 6.48.1) drawing no. 09-771 (1 of 2)

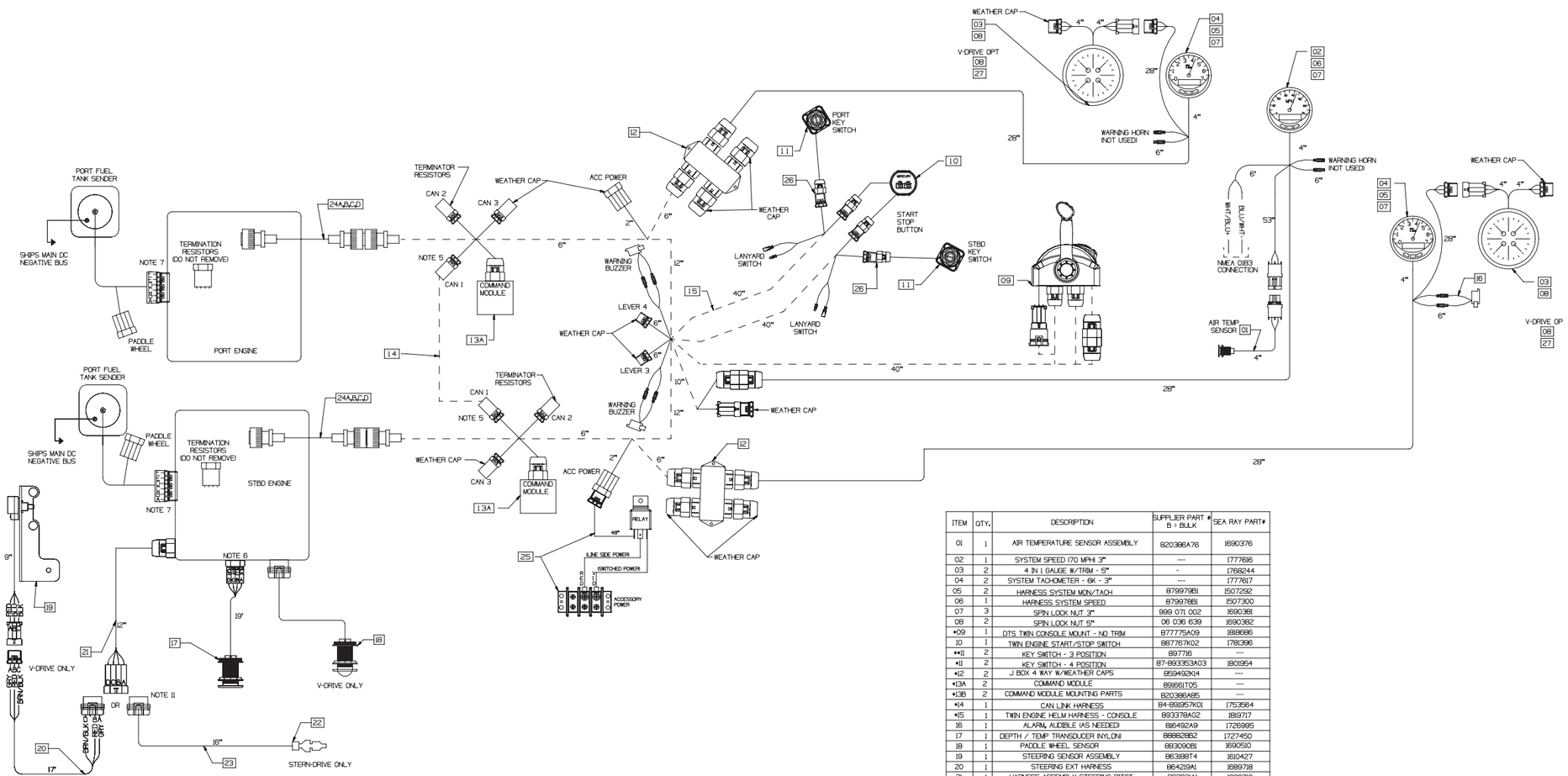

ITEM	QTY.	DESCRIPTION	SUPPLIER PART # B = BULK	SEA RAY PART#
01	1	AIR TEMPERATURE SENSOR ASSEMBLY	820386A76	1690376
02	1	SYSTEM SPEED (70 MPH) 3"	---	1777616
03	2	4 IN 1 GAUGE W/TRIM - 5"	-	1768244
04	2	SYSTEM TACHOMETER - 6K - 3"	---	1777617
05	2	HARNESS SYSTEM MON/TACH	879979B1	1507292
06	1	HARNESS SYSTEM SPEED	879978B1	1507300
07	3	SPIN LOCK NUT 3"	999 071 002	1690381
08	2	SPIN LOCK NUT 5"	06 036 639	1690382
*09	1	DTS TWIN CONSOLE MOUNT - NO TRIM	877775A09	1818886
10	1	TWIN ENGINE START/STOP SWITCH	887767K02	1781396
**11	2	KEY SWITCH - 3 POSITION	89771B	---
*11	2	KEY SWITCH - 4 POSITION	87-893353A03	1801954
*12	2	J BOX 4 WAY W/WEATHER CAPS	859492K14	---
*13A	2	COMMAND MODULE	89186LT05	---
*13B	2	COMMAND MODULE MOUNTING PARTS	820386A85	---
*14	1	CAN LINK HARNESS	84-891957K01	1753564
*15	1	TWIN ENGINE HELM HARNESS - CONSOLE	893378A02	1819717
16	1	ALARM, AUDIBLE (AS NEEDED)	88648249	1726995
17	1	DEPTH / TEMP TRANSDUCER (NYLON)	88882982	1727450
18	1	PADDLE WHEEL SENSOR	8830090B1	1690510
19	1	STEERING SENSOR ASSEMBLY	863188T4	1610427
20	1	STEERING EXT HARNESS	864219A1	1889718
21	1	HARNESS ASSEMBLY STEERING PITOT	863931A1	1889719
22	1	100PSI PITOT SENSOR KIT	88879A2	1690375
23	1	HARNESS, PITOT ONLY	8637371	1691477
24A	***	CAN DATA HARNESS-14 PIN 20'	892451T20	1772365
24B	***	CAN DATA HARNESS - 14 PIN 25'	892451T25	1812222
24C	***	CAN DATA HARNESS - 14 PIN 30'	892451T30	1772366
24D	***	CAN DATA HARNESS - 14 PIN 40'	892451T40	1798207
*25	2	ACC POWER HARNESS/RELAY HARNESS KIT	8896IK01	1781346
	1	DTS TWIN ENGINE RIGGING KIT - NO TRIM	877775K29	1819719
26	***	KEY SWITCH EXTENSION HARNESS 15'	89669IT15	1790090
27	2	4 IN 1 GAUGE - 5" VOLT (V-DRIVE OPT)	-	1743421

* PART OF DTS TWIN ENGINE RIGGING KIT
** 3 POSITION CAN REPLACE 4 POSITION FOR SHORTER KEY HEIGHT.
*** QTY. PER ENGINE REQUIRED LENGTH.

Mercury DTS System (2 of 2)
(Fig. 6.49.1) DRAWING NO. 09-771 (2 of 2)

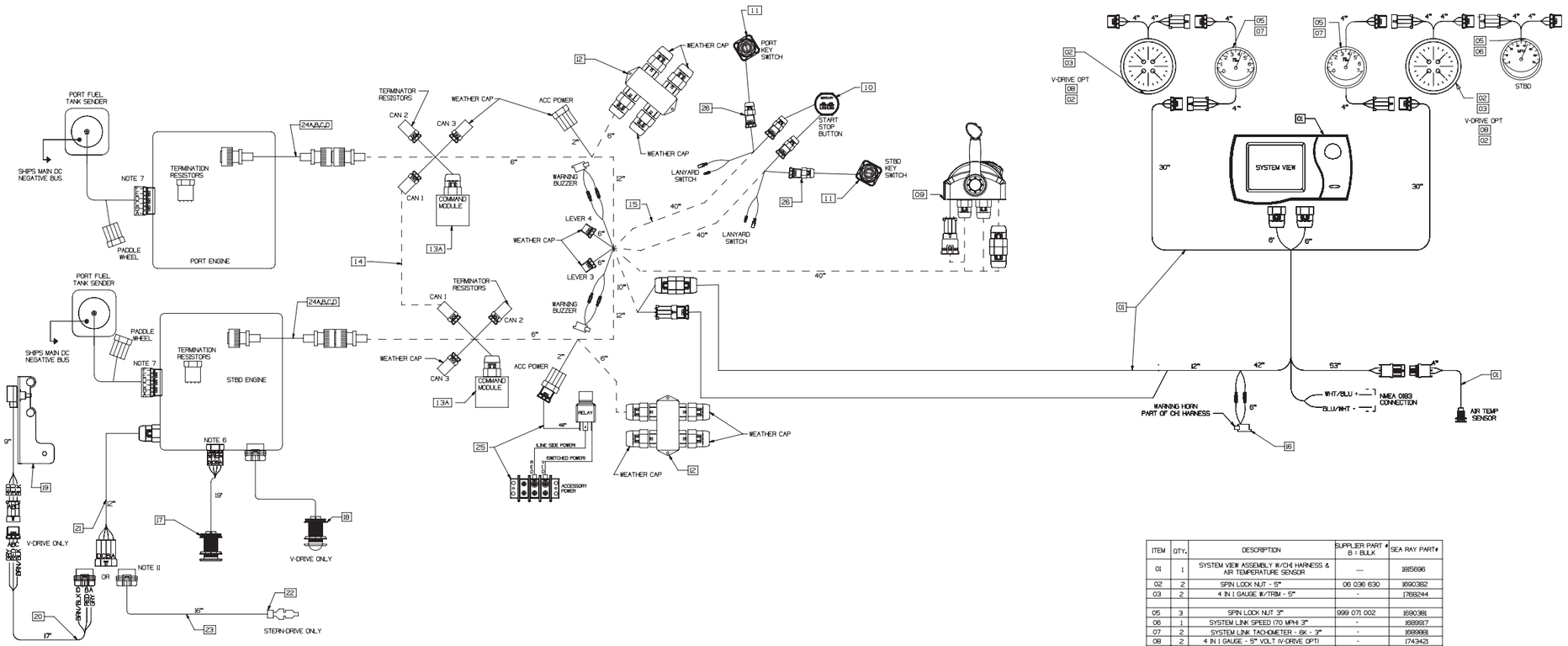

ITEM	QTY.	DESCRIPTION	SUPPLIER PART # B = BULK	SEA RAY PART#
01	1	SYSTEM VIEW ASSEMBLY W/CH1 HARNESS & AIR TEMPERATURE SENSOR	---	1815696
02	2	SPIN LOCK NUT - 5"	06 036 630	1690382
03	2	4 IN 1 GAUGE W/TRIM - 5"	-	1788244
05	3	SPIN LOCK NUT 3"	999 071 002	1690381
06	1	SYSTEM LINK SPEED (70 MPH) 3"	-	1689917
07	2	SYSTEM LINK TACHOMETER - (6K) - 3"	-	1689893
08	2	4 IN 1 GAUGE - 5" VOLT (V-DRIVE OPT)	-	1743423
*09	1	DTS TWIN CONSOLE MOUNT - NO TRIM	877775A09	1818696
10	1	TWIN ENGINE START/STOP SWITCH	887767K02	1781396
**11	2	KEY SWITCH - 3 POSITION	887778	---
*11	2	KEY SWITCH - 4 POSITION	87-893353A03	1801954
*12	2	J BOX 4 WAY W/WEATHER CAPS	859432K14	---
*13A	2	COMMAND MODULE	89868T05	---
*13B	2	COMMAND MODULE MOUNTING PARTS	820386A95	---
*14	1	CAN LINK HARNESS	84-898957K01	1753584
*15	1	TWIN ENGINE HELM HARNESS - CONSOLE	893378A02	1819717
16	1	ALARM, AUDIBLE (AS NEEDED)	826492A9	1726995
17	1	DEPTH / TEMP TRANSDUCER (NYLON)	838828B2	1727450
18	1	PADDLE WHEEL SENSOR	883090B1	1690510
19	1	STEERING SENSOR ASSEMBLY	863388T4	1610427
20	1	STEERING EXT HARNESS	864298A1	1689718
21	1	HARNESS ASSEMBLY STEERING PITOT	863923A1	1689719
22	1	100PSI PITOT SENSOR KIT	868879A2	1690375
23	1	HARNESS, PITOT ONLY	863737T	1691477
24A	***	CAN DATA HARNESS-(4 PIN 20')	892451T20	1772385
24B	***	CAN DATA HARNESS - 14 PIN 25'	892451T25	1812222
24C	***	CAN DATA HARNESS - 14 PIN 30'	892451T30	1772386
24D	***	CAN DATA HARNESS - 14 PIN 40'	892451T40	1798207
*25	2	ACC POWER HARNESS/RELAY HARNESS KIT	899618K01	1781346
	1	DTS TWIN ENGINE RIGGING KIT - NO TRIM	877775K29	1819719
26	***	KEY SWITCH EXTENSION HARNESS 15'	899669T15	1790090

* PART OF DTS TWIN ENGINE RIGGING KIT
** 3 POSITION CAN REPLACE 4 POSITION FOR SHORTER KEY HEIGHT.
*** QTY. PER ENGINE REQUIRED LENGTH.

Volvo D4/D6 System
(Fig. 6.50.1) DRAWING NO. 09-783

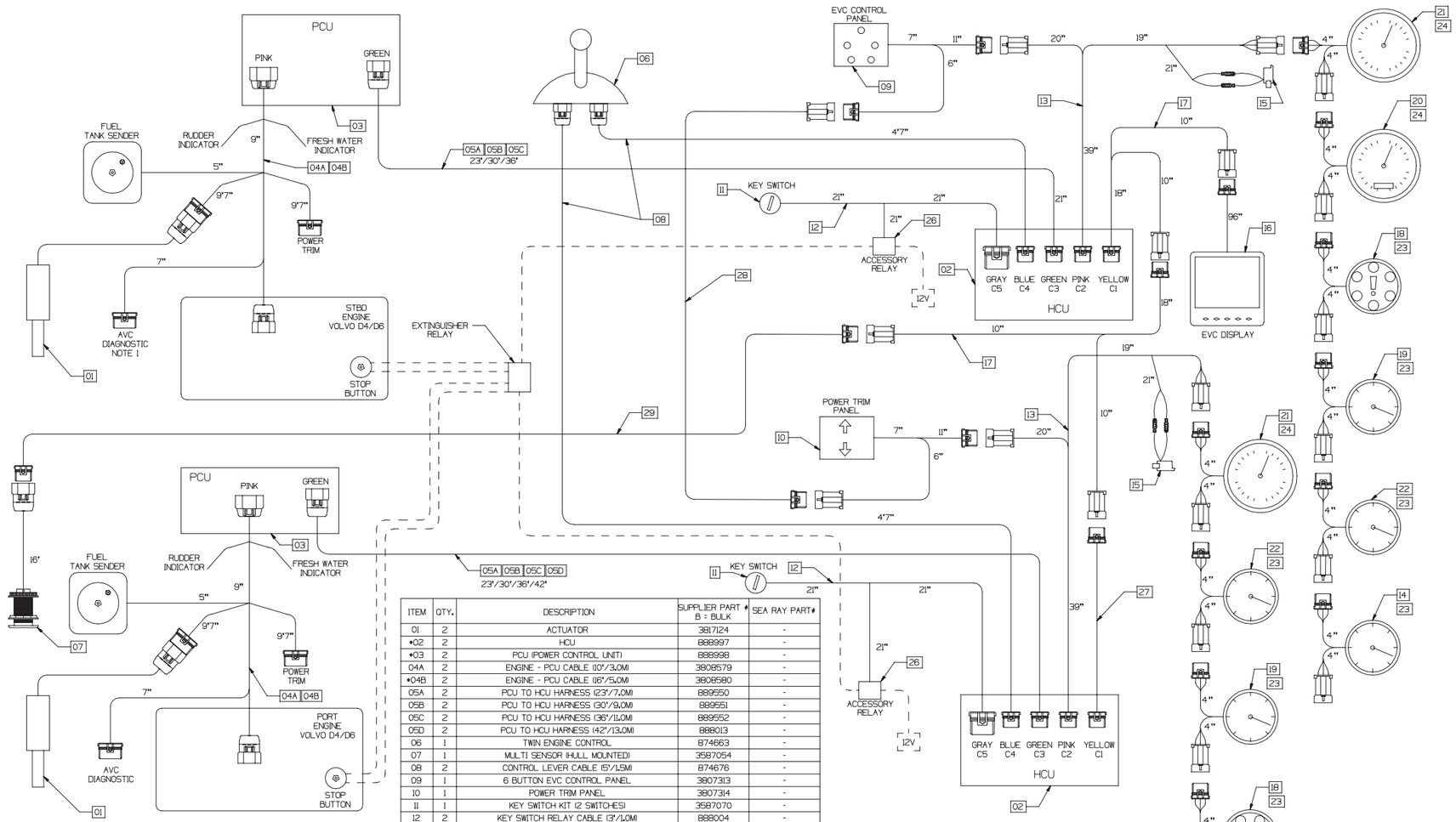

ITEM	QTY.	DESCRIPTION	SUPPLIER PART # B = BULK	SEA RAY PART#
01	2	ACTUATOR	3817124	-
*02	2	HCU	888997	-
*03	2	PCU (POWER CONTROL UNIT)	888998	-
04A	2	ENGINE - PCU CABLE (10'/3.0M)	3808579	-
*04B	2	ENGINE - PCU CABLE (16'/5.0M)	3808580	-
05A	2	PCU TO HCU HARNESS (23'/7.0M)	889550	-
05B	2	PCU TO HCU HARNESS (30'/9.0M)	889551	-
05C	2	PCU TO HCU HARNESS (36'/11.0M)	889552	-
05D	2	PCU TO HCU HARNESS (42'/13.0M)	888013	-
06	1	TWIN ENGINE CONTROL	874663	-
07	1	MULTI SENSOR (HULL MOUNTED)	3587054	-
08	2	CONTROL LEVER CABLE (5'/1.5M)	874676	-
09	1	6 BUTTON EVC CONTROL PANEL	3807313	-
10	1	POWER TRIM PANEL	3807314	-
11	1	KEY SWITCH KIT (2 SWITCHES)	3587070	-
12	2	KEY SWITCH RELAY CABLE (3'/1.0M)	888004	-
13	2	INSTRUMENTS, BUTTON PANELS, & AUX CABLE (5'/1.5M)	3808952	-
14	2	FUEL GAUGE	874914	-
15	2	ALARM BUZZER	3863454	-
16	1	EVC DISPLAY (INCLUDING 8'/2.5M CABLE)	3588849	-
17	2	Y-SPLIT MULTILINK DISPLAY CABLE (1.6'/.5M)	3588206	-
18	2	ALARM GAUGE (52MM)	874915	-
19	2	POWER TRIM GAUGE (52MM)	874948	-
20	1	BOAT SPEED (85MM)	3807508	-
21	2	ENGINE SPEED (85MM)	874903	-
22	2	COOLANT TEMP GAUGE (52MM)	874904	-
23	8	FRONT RING KIT (52MM) CHROME	881613	-
24	3	FRONT RING KIT (85MM) CHROME	881614	-
26	2	ACCESSORY RELAY	873765	-
27	1	MULTILINK CABLE	3588208	-
28	1	EXTENSION MULTILINK SYNC (10'/3.0M)	888243	-
29	1	EXTENSION CABLE (23')	874781	-

* INCLUDED W/ENGINE

Bilge Harness
(Fig. 6.51.1) DRAWING NO. 09-802 (1 of 4)

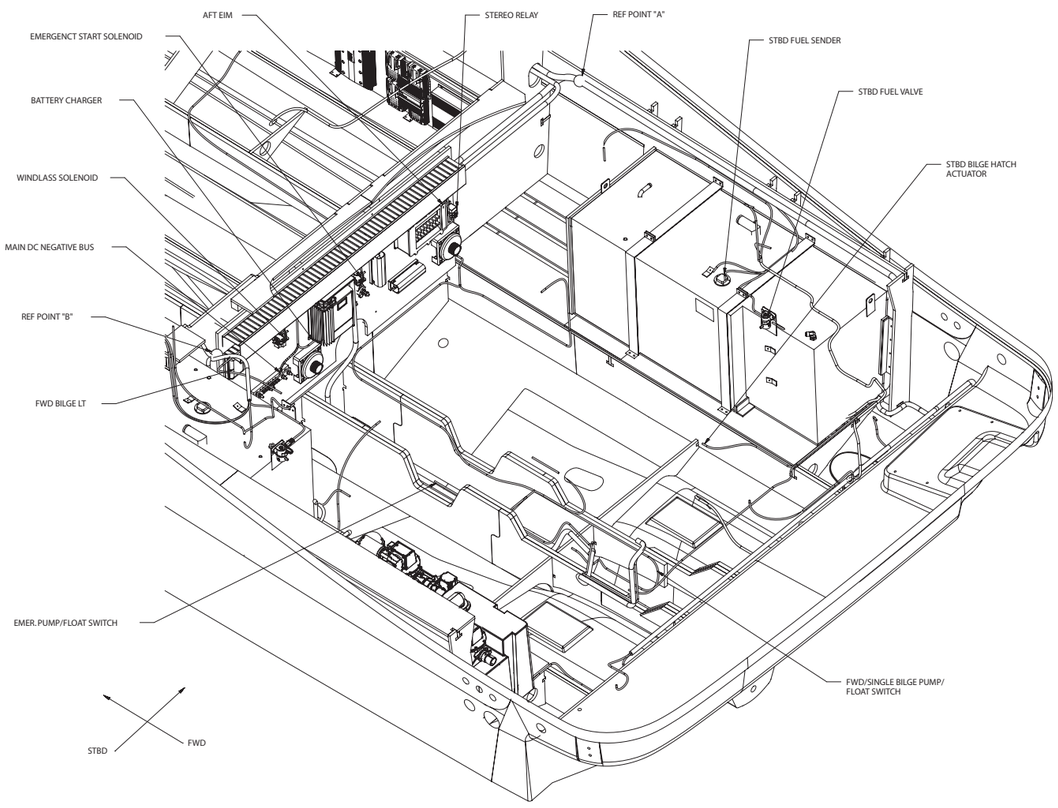

Bilge Harness
(Fig. 6.6.51.2) DRAWING NO. 09-802 (2 of 4)

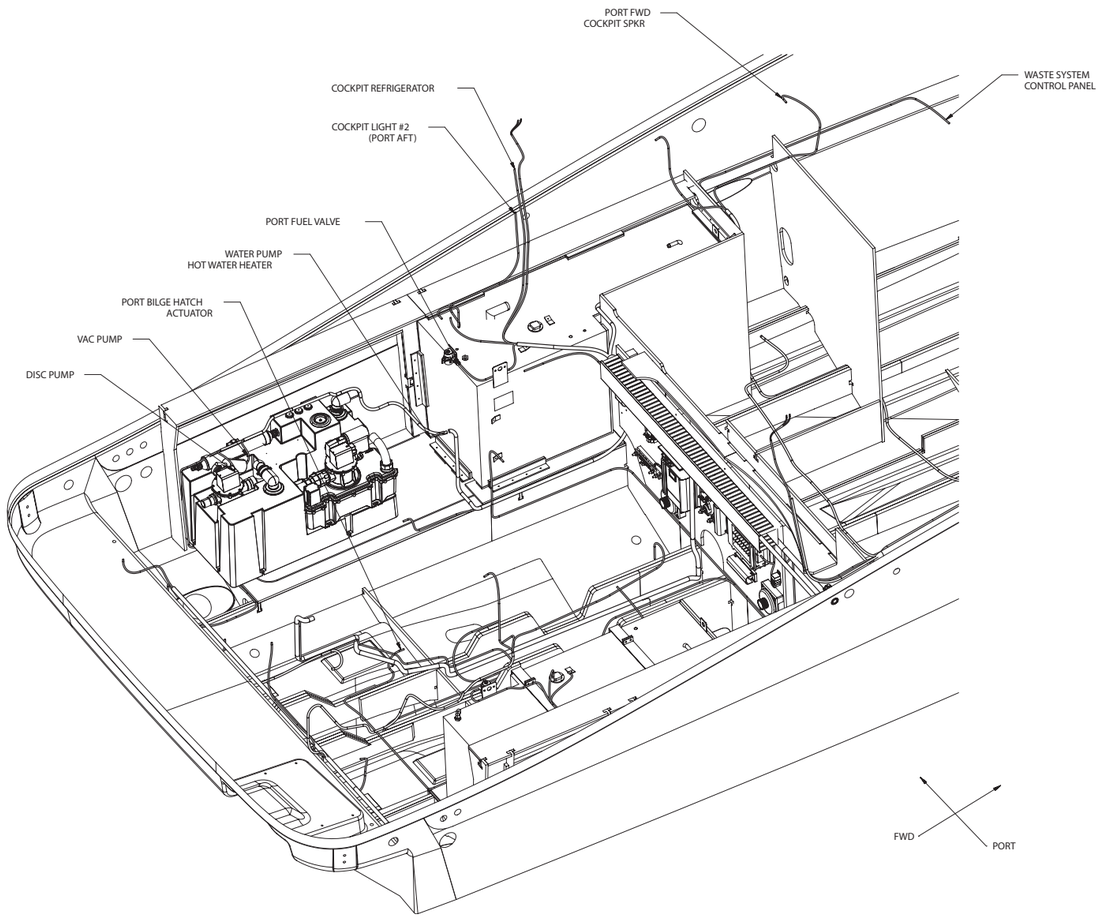

Bilge Harness
(Fig. 6.52.1) DRAWING NO. 09-802 (3 of 4)

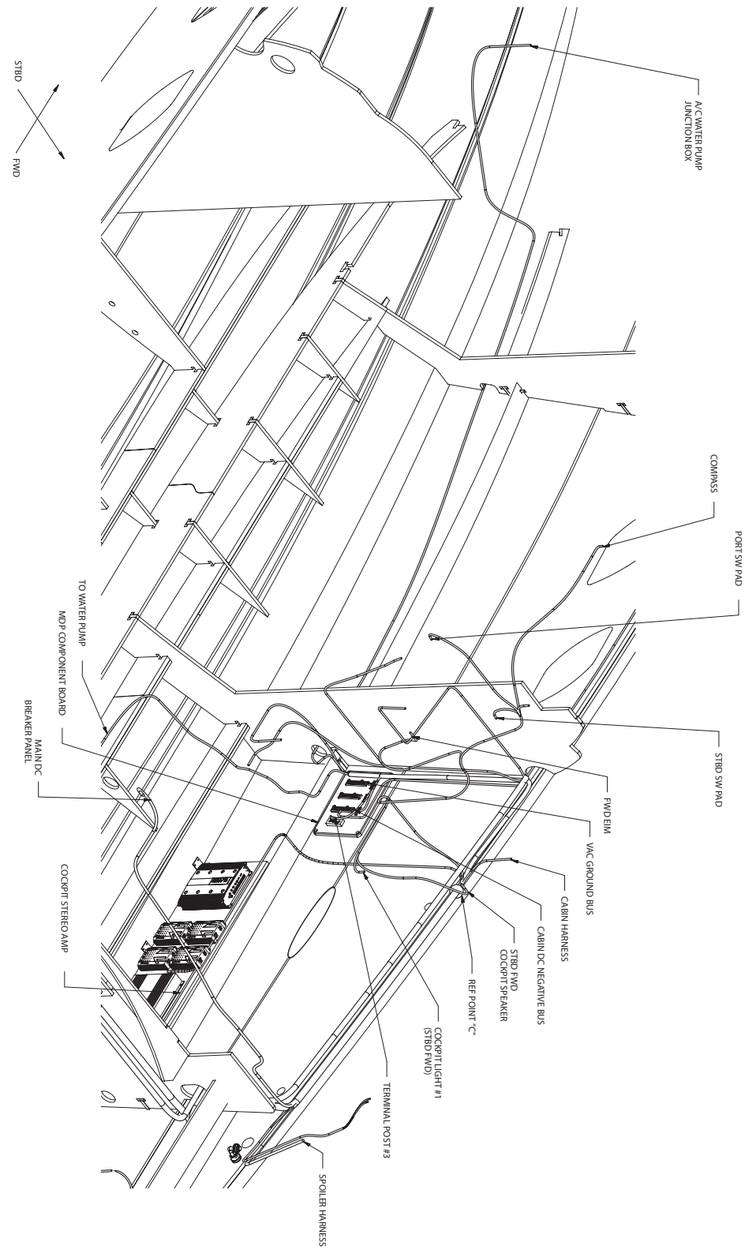

Bilge Harness
(Fig. 6.52.2) DRAWING NO. 09-802 (4 of 4)

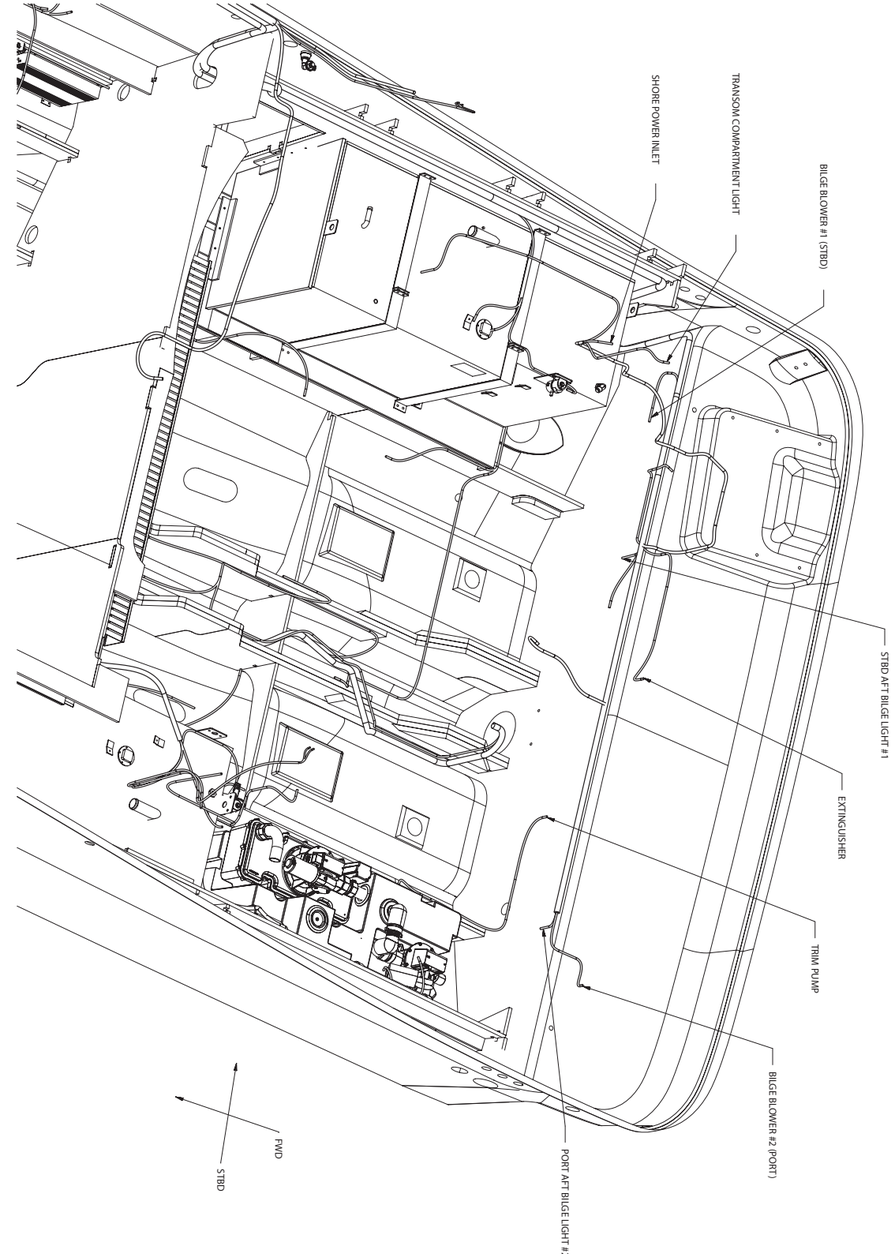

Cabin Harness
(Fig. 6.53.1) DRAWING NO. 09-811 (1 of 2)

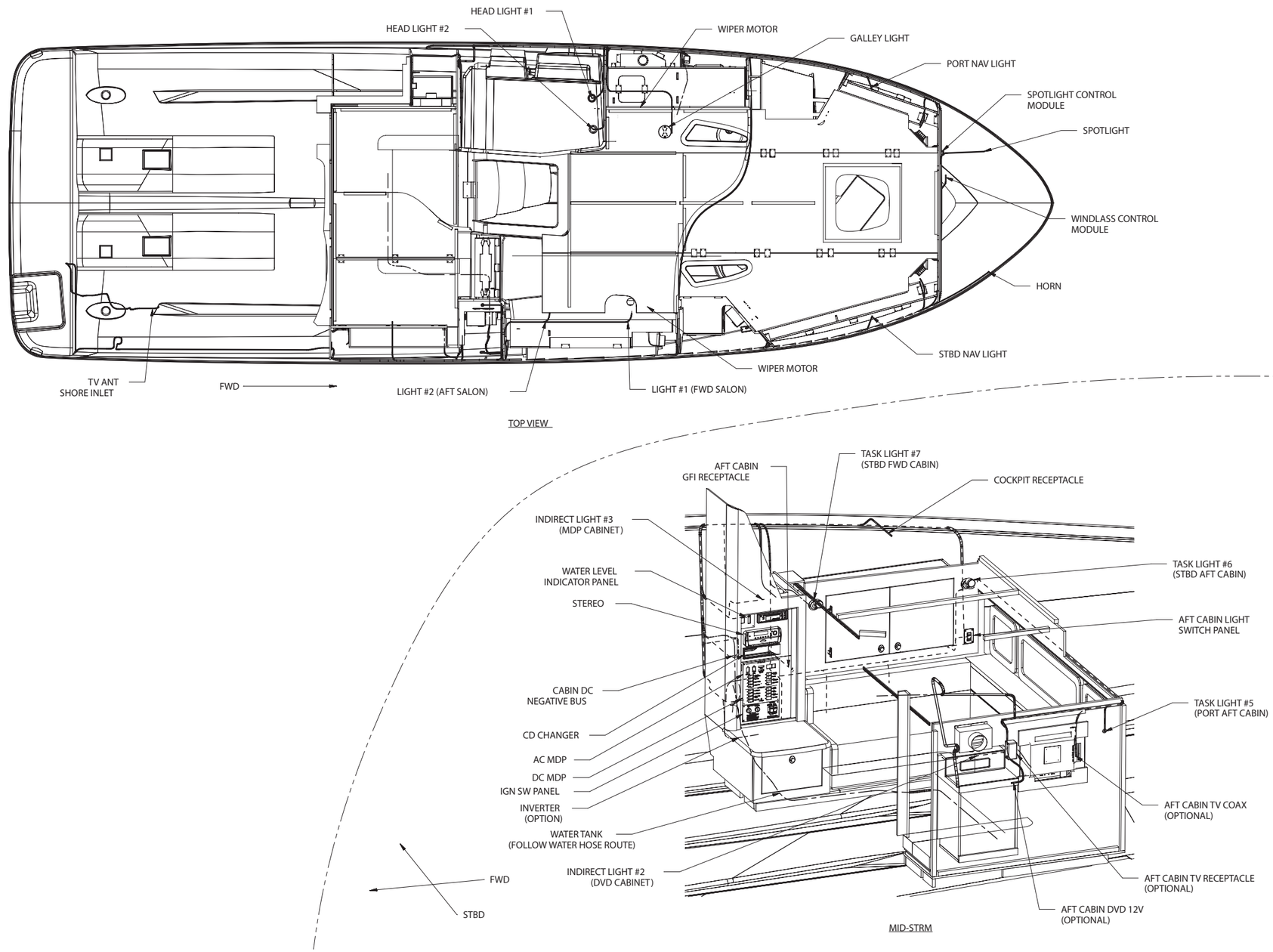

Cabin Harness
(Fig. 6.54.1) DRAWING NO. 09-811 (2 of 2)

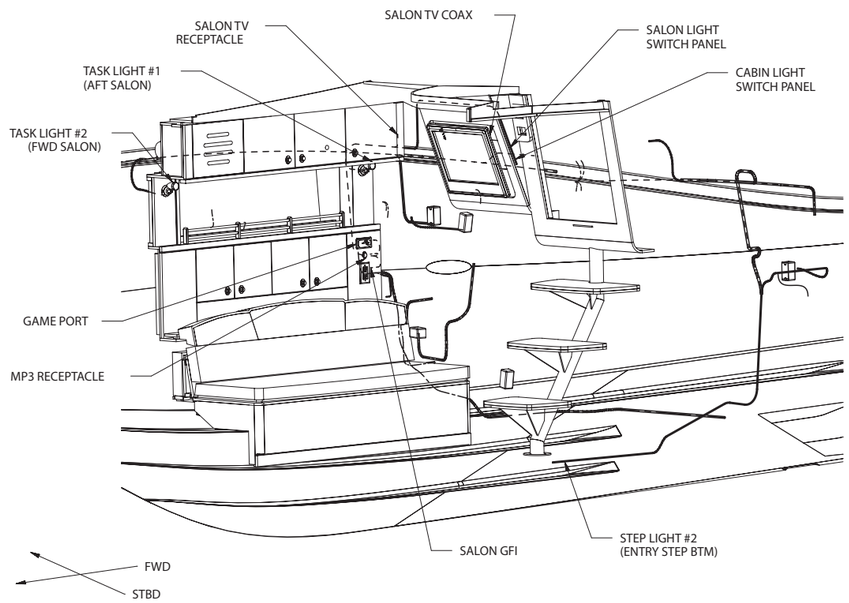

SALON

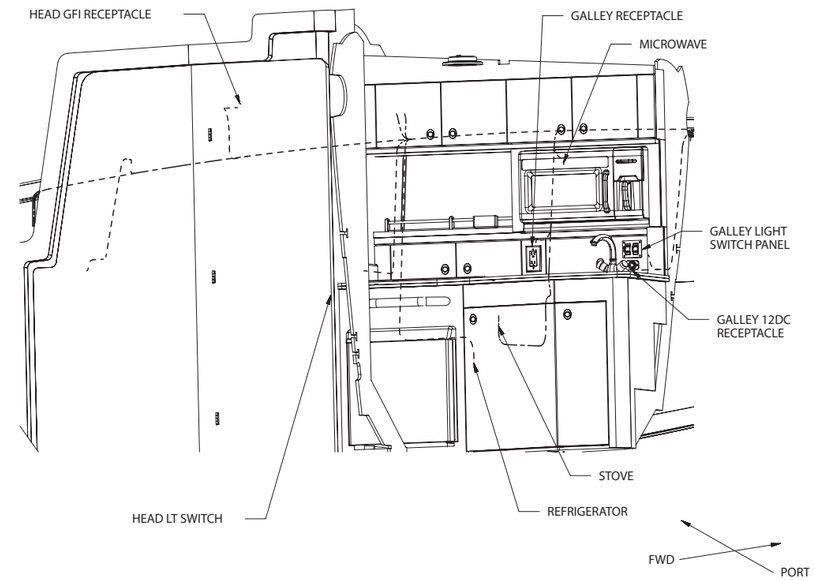

HEAD/GALLEY

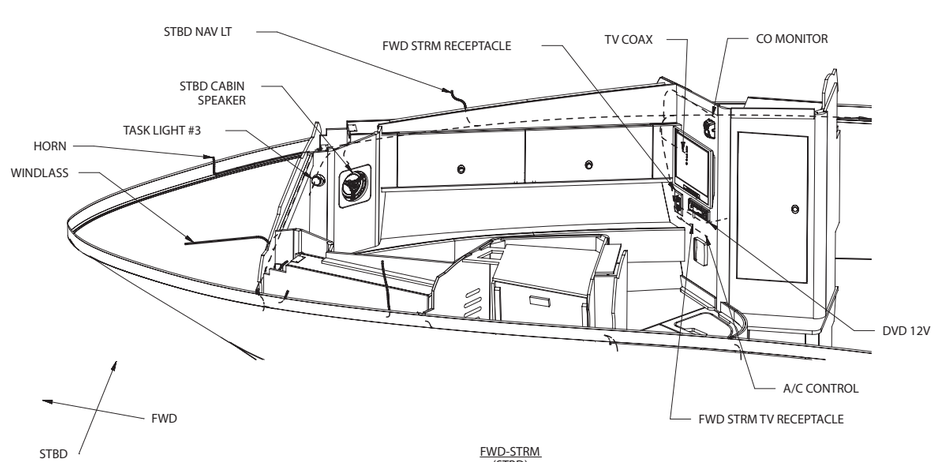

FWD-STRM
(STBD)

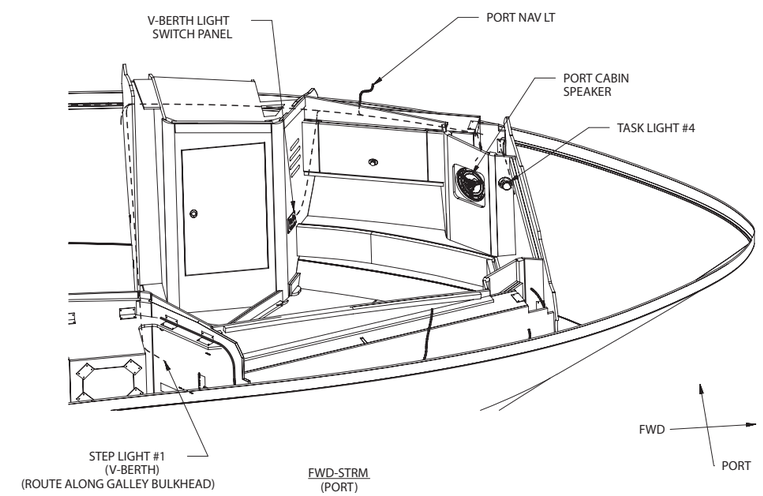

FWD-STRM
(PORT)

Ceiling Harness
(Fig. 6.55.1) DRAWING NO. 09-813

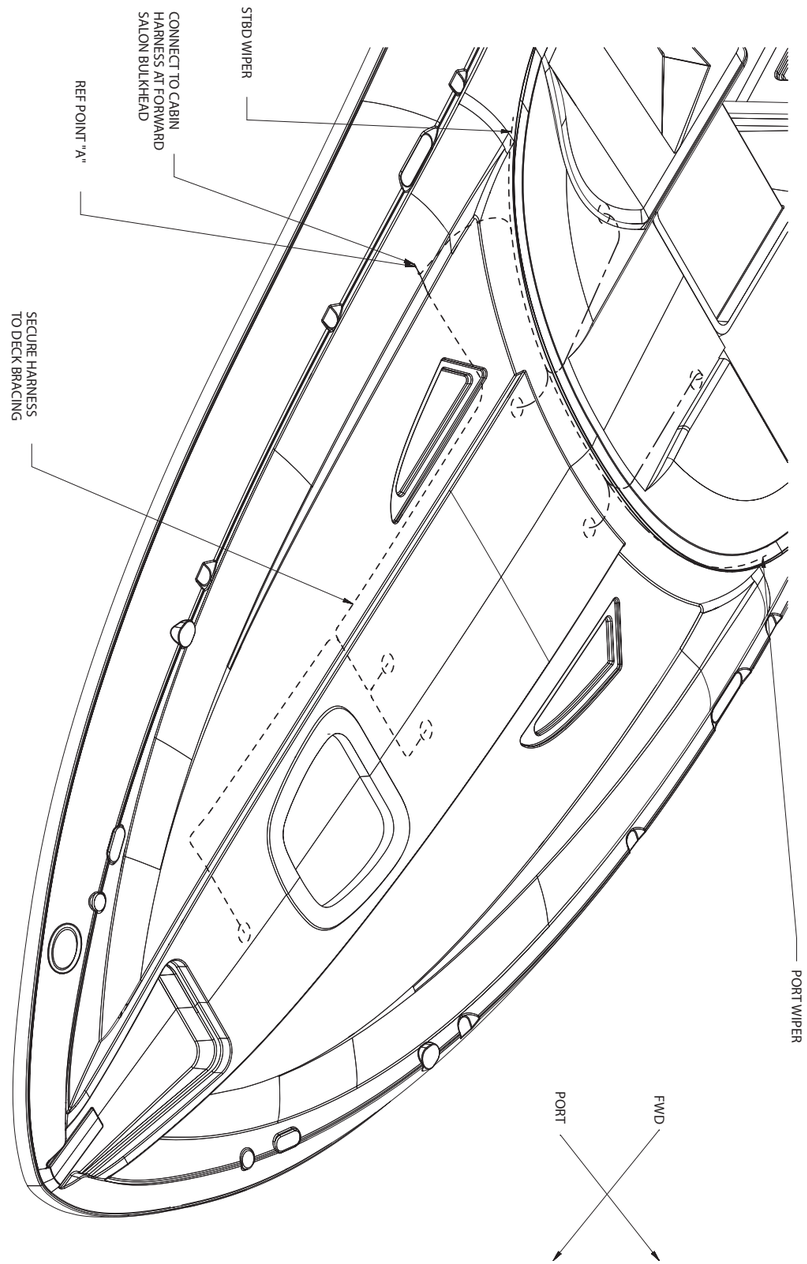

Volvo Interface Harness
(Fig. 6.55.2) DRAWING NO. 09-822

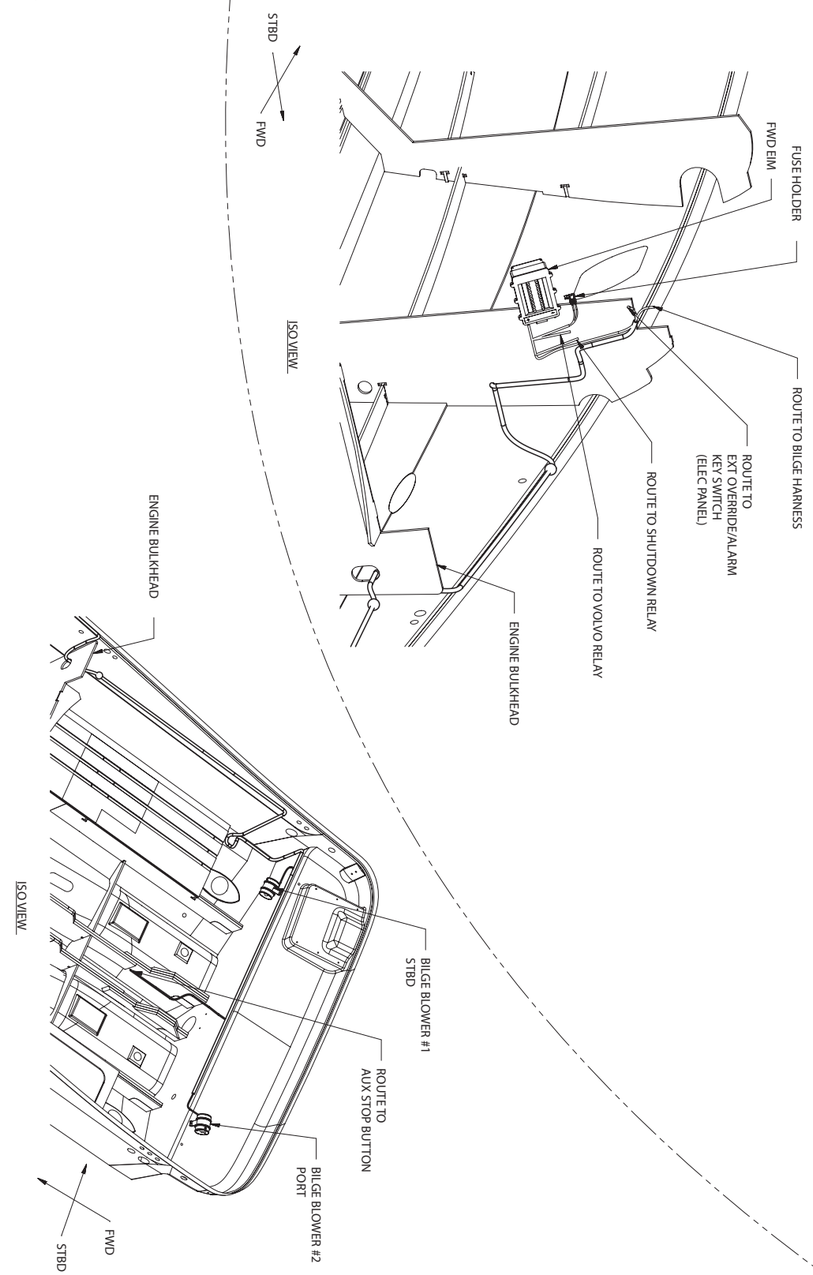

Generator Harness (Stern Drive)
(Fig. 6.56.1) DRAWING NO. 09-828

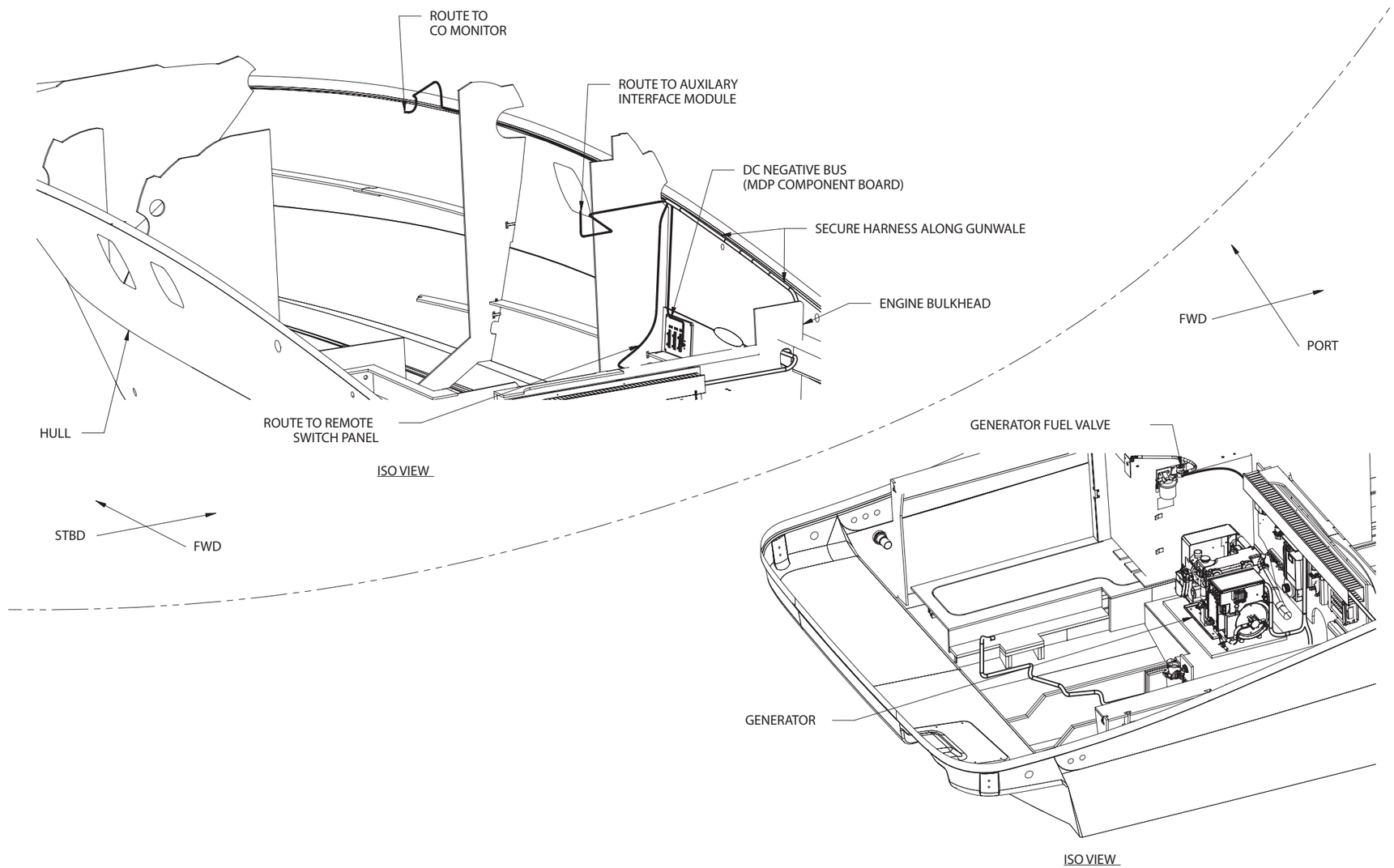

Generator Harness (V-Drive)
(Fig. 6.57.1) DRAWING NO. 09-813

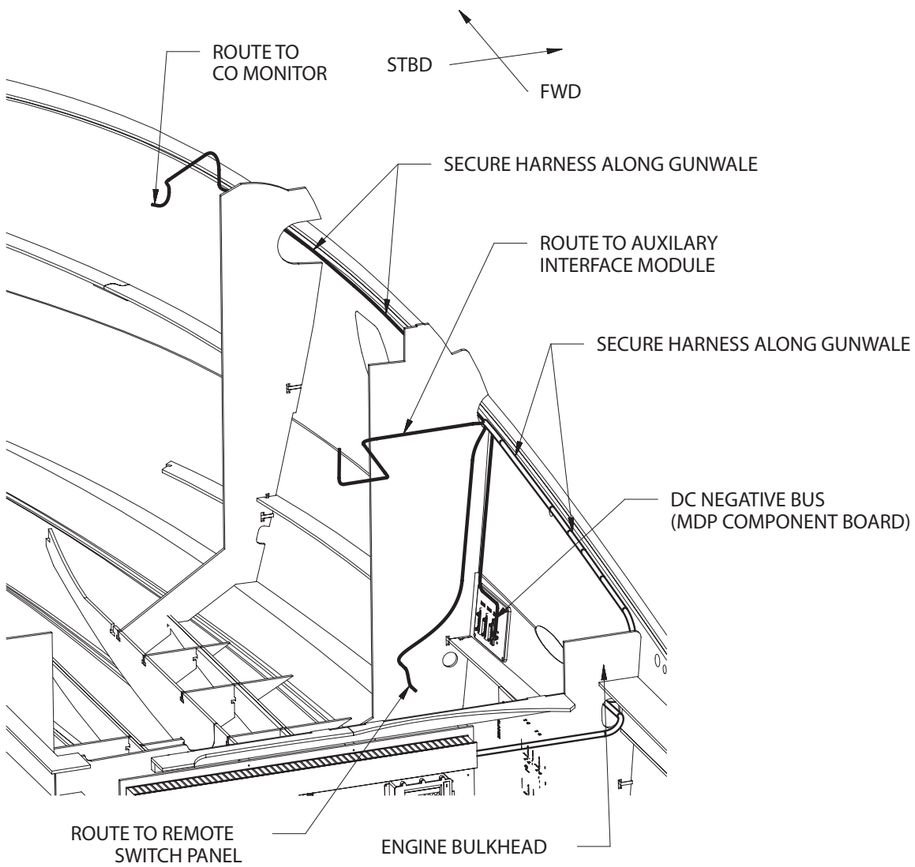

ISO VIEW

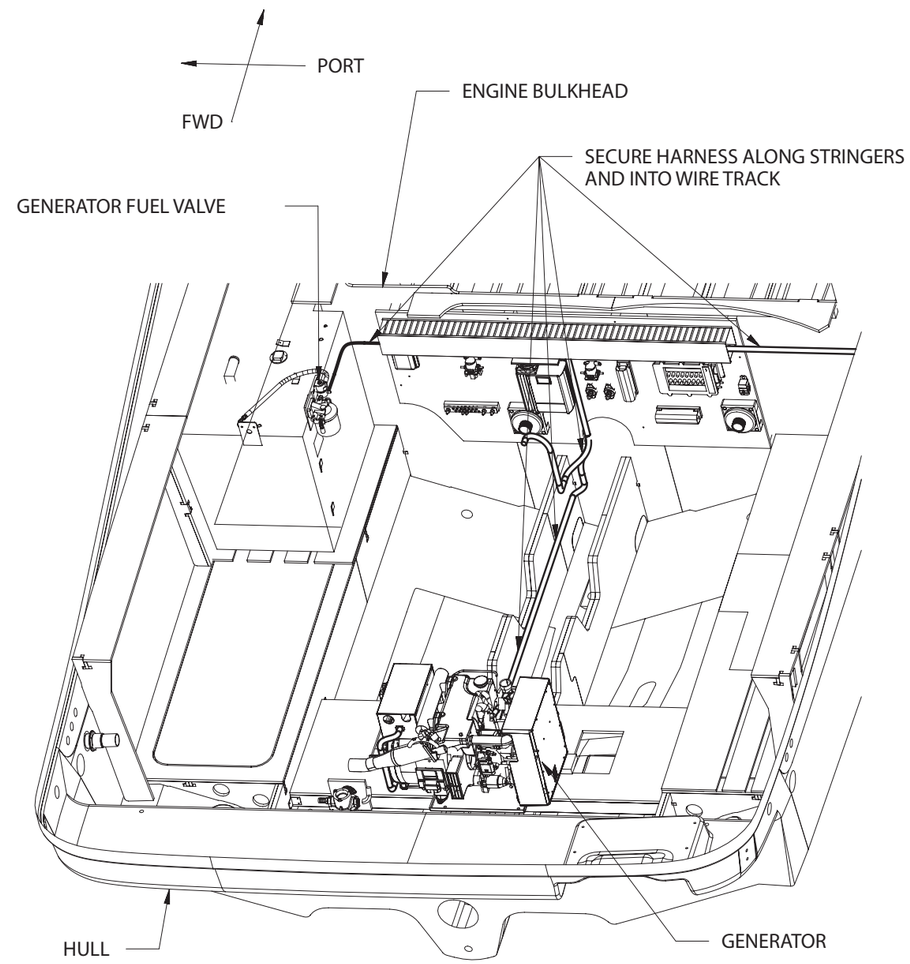

ISO VIEW

Ceiling Harness
(Fig. 6.58.1) DRAWING NO. 09-813

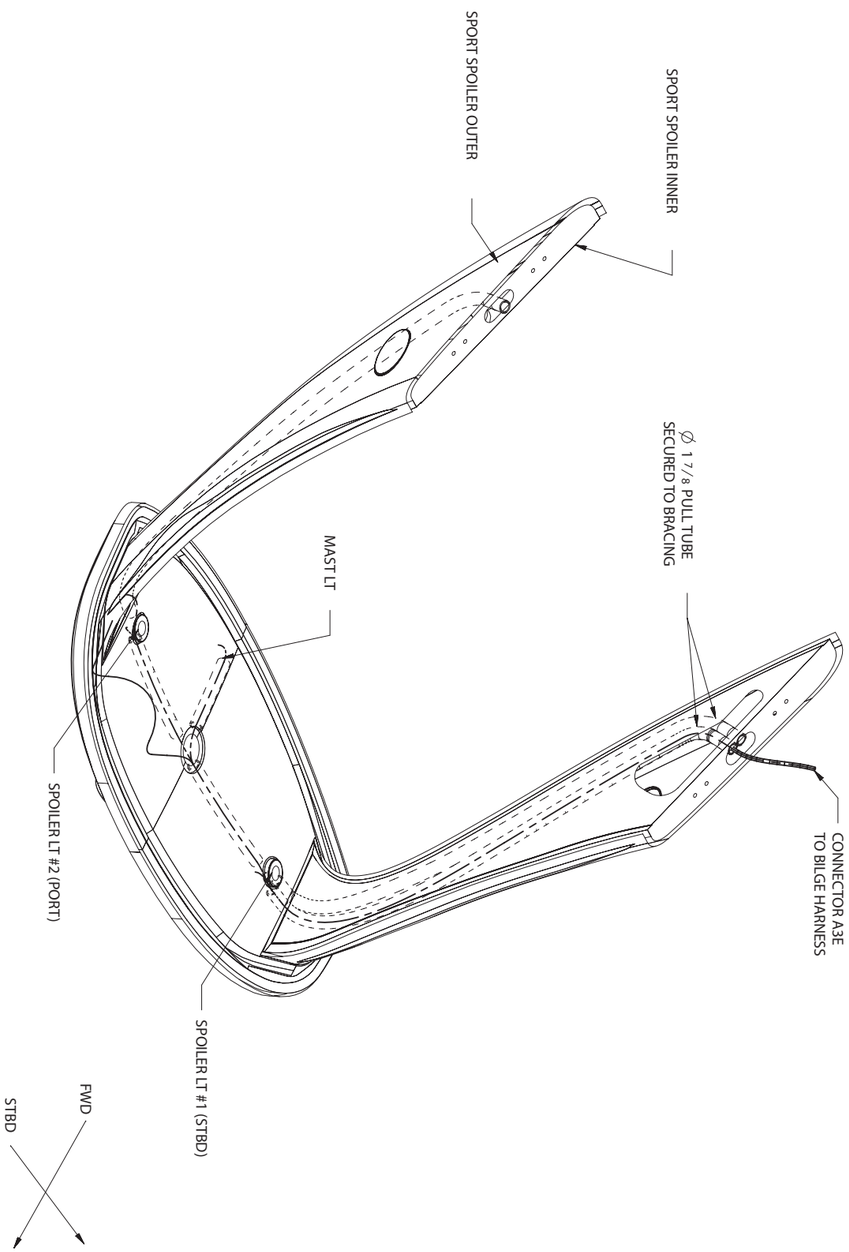

Stereo Harness
(Fig. 6.58.1) DRAWING NO. 09-833

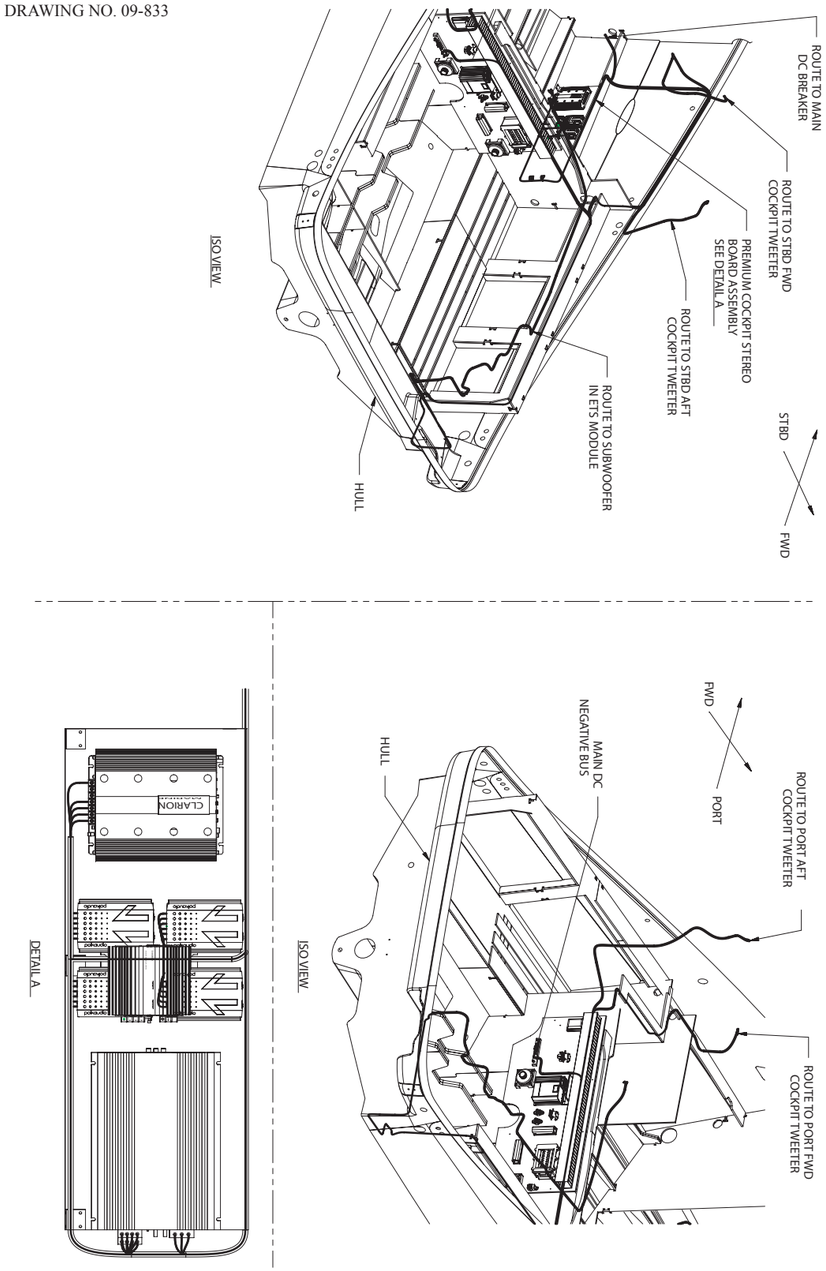

Windlass Harness
(Fig. 6.59.1) DRAWING NO. 09-835

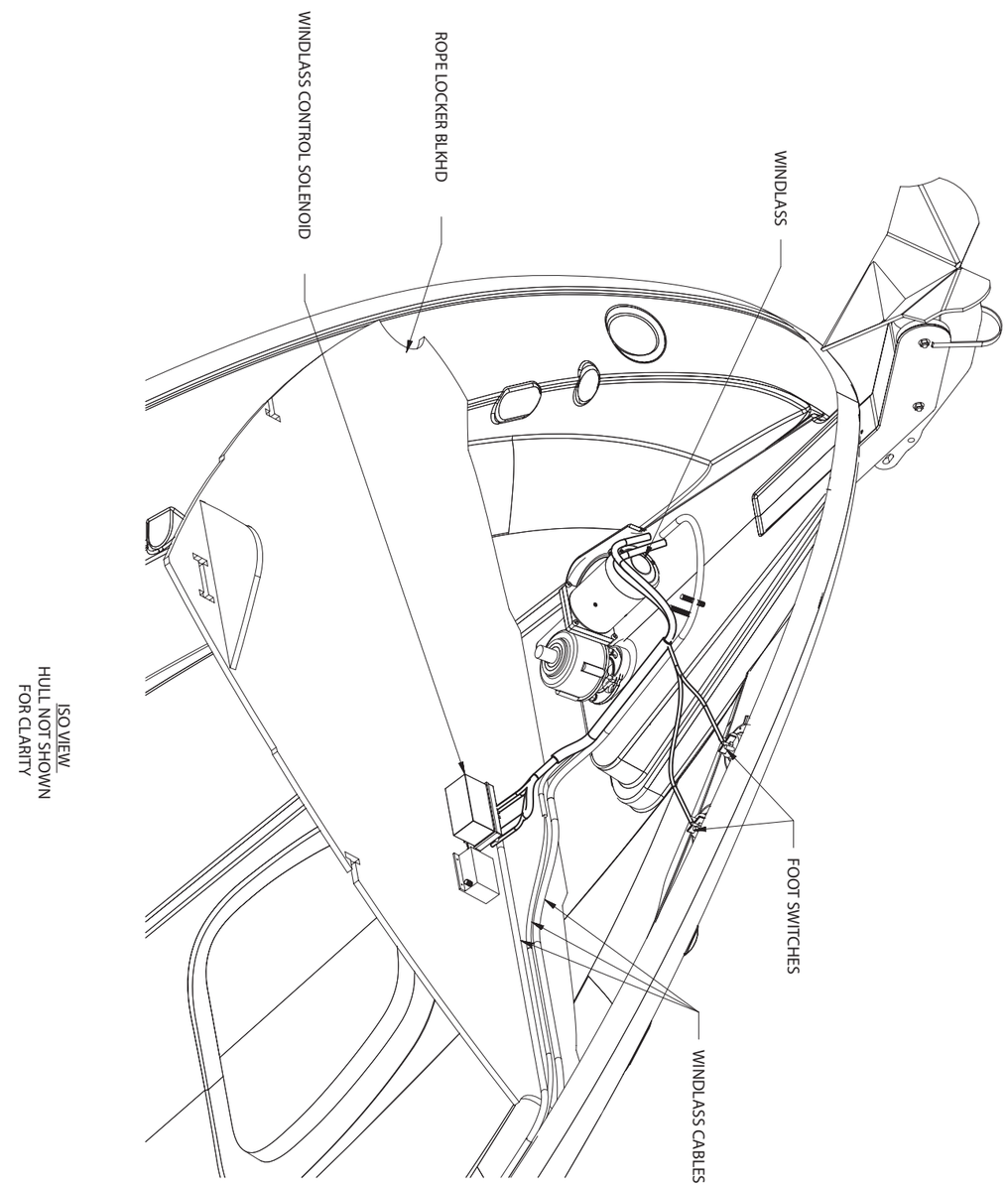

THIS PAGE LEFT INTENTIONALLY BLANK

1. Layout and Accessory Locations

Pages 2.6 through 2.10 show the location and arrangement of the most important equipment and components on your boat. Using these drawings, walk through your boat, locate the features shown, and become familiar with their operation and maintenance.

2. Carbon Monoxide Monitor

The 310 DA is equipped with a carbon monoxide (CO) monitor on the V-berth port hanging locker. The CO monitor is an electronic instrument that detects carbon monoxide. When there is a buildup of CO in the cabin, the monitor will alert the occupants by flashing a DANGER light and sounding an alarm. The CO monitor is powered through a breaker on the Main Distribution panel in the galley.

It is important that you read and understand the CO monitor information and operating instructions. It is extremely important that you become familiar with the CO monitor and its functions.

A. Testing the CO Monitor

Test the monitor on your boat at manufacturers required intervals by pushing the TEST button on the side of the unit. If the unit is operating correctly both audible and visual warning indicators will be activated.

Carbon Monoxide Monitor
(Fig. 7.1.1)

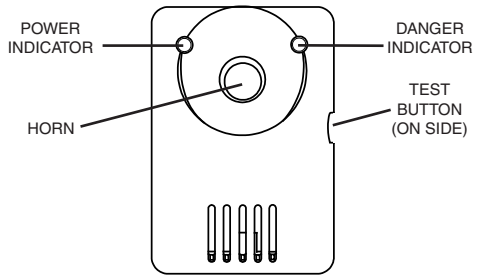

CAUTION

This detector will only indicate the presence of carbon monoxide gas at the sensor. Carbon monoxide may be present in other areas.

DANGER

Actuation of the CO monitor indicates the presence of carbon monoxide which can be FATAL.

EVACUATE THE PREMISES IMMEDIATELY. DO A HEAD COUNT TO CHECK THAT ALL PERSONS ARE ACCOUNTED FOR. CALL THE NEAREST FIRE DEPARTMENT AND ASK THEM TO DETERMINE THE SOURCE OF CARBON MONOXIDE. DO NOT REENTER PREMISES UNTIL IT HAS BEEN AIRED OUT AND THE PROBLEM IS CORRECTED.

CAUTION

To reduce the risk of carbon monoxide poisoning, test the monitor operation when not in use for 10 days or more.

3. Air Conditioning & Heating (Optional)

The air conditioning/heating system, if installed, in your Sea Ray® is of the size and capacity best suited for the size of your boat.

The system is fitted with a return air filter that should be cleaned once a month. To remove the air filter for cleaning, slide filter out of the compressor/blower unit.

The system is cooled to maintain optimal operating temperature by a raw water pump. The pump draws water through a seacock in the bilge and filters it through a sea water strainer. (The sea water strainer should be inspected and cleaned frequently. To clean strainer, refer to Page 4.8) The water passes through the air conditioning/heating unit, then flows overboard.

A. TO START SYSTEM:

1. Make sure the seacock for the cooling pump is open.
2. Turn ON the AIR CONDITIONER circuit breaker on the Main Distribution panel.
3. Follow the instructions in the Air Conditioner/ Heater manual for control pad operation.

REFER TO OWNER'S MANUAL PACKET FOR INSTRUCTIONS AND WARRANTY INFORMATION.

TYPICAL AIR CONDITIONING COMPRESSOR/ BLOWER (FIG. 7.2.1)

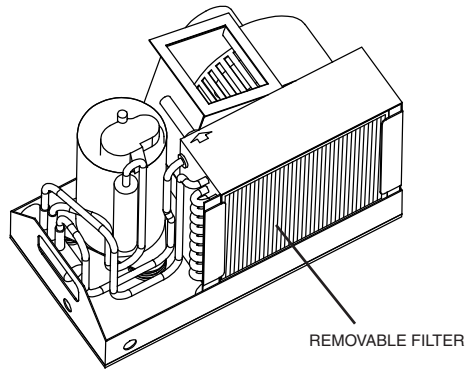

4. WATER SYSTEM

The fresh water system consists of a 35 gallon (132.5 liter) water tank, 12 volt water pump and water system filter.

The fresh water system is activated by the FRESH WATER PUMP switch on the Main Distribution panel in the Cabin (See Fig. 6.12.1).

To begin initial operation:

1. Fill the water tank from a source known to provide safe, pure drinking water by removing the cap marked WATER located on the starboard mid deck and inserting the water hose nozzle in the opening. Do not mistake the fuel fill or the waste plate for the water tank fill cap.
2. Turn ON the FRESH WATER PUMP breaker, located on the Main Distribution Panel.
3. Open the sink faucet to allow any air trapped in the water line to dissipate.
4. Shut off faucet as flow becomes free of air.

AIR CONDITIONING & HEATING SYSTEM (FIG. 7.2.2)

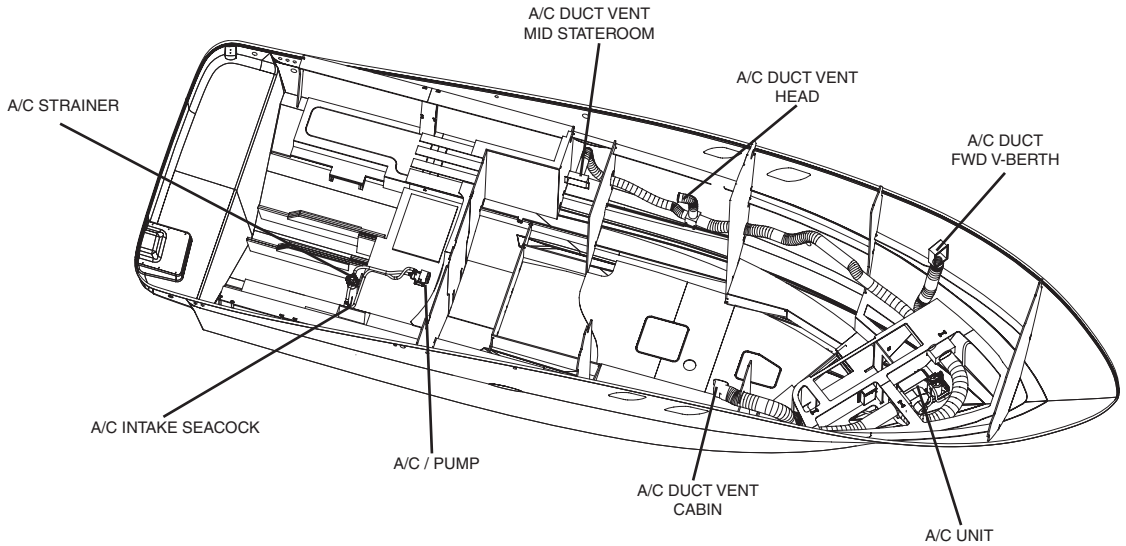

Shutting off the faucet will cause the pump to shut off. As long as the water pump and battery switches are on, the pump will automatically provide water on demand.

A. Sanitizing the Water System

If the fresh water system has not been used for some time, or if you suspect that it has been contaminated, then it should be sanitized. Your marine dealer may have a water treatment additive that can be used to sanitize the system. Follow the instructions provided with the additive.

If a water treatment additive is not available, the following steps may be followed to sanitize the water system:

1. Pump the water tank empty. Shut OFF the Fresh Water Pump breaker.
2. Determine the capacity of your water tank (your standard water tank holds 28 gallons (106 liters)). You will need approximately one (1) gallon of weak bleach solution for each fifteen (15) gallons of tank capacity.
3. Prepare the proper amount of a weak bleach solution by mixing 1/4 cup of unscented household chlorine bleach per gallon of water.
4. Pour weak bleach solution into the water tank. Remember, use about one (1) gallon of weak bleach solution for each fifteen (15) gallons of tank capacity.
5. Fill the remainder of the tank with fresh, clean water. This will further dilute the weak bleach solution.
6. Switch ON the Fresh Water Pump breaker, then turn on the faucets and allow the air to be exhausted from the plumbing system. By doing this, the entire fresh water system will be filled with a sanitizing solution.
7. Allow the sanitizing solution to stand in the water system for three (3) hours.
8. Pump the water tank empty.
9. Fill the water system completely with fresh, clean water. Turn on the faucet and permit the entire contents of fresh, clean water to run through the system. This will flush the sanitizing solution out of the plumbing.
10. Fill the water system again, with fresh, clean water, and turn on the faucet to permit the air to dissipate.

Your water system is now sanitized.

B. Water Pump and Filter

Water Pump and Filter
(Fig. 7.3.1)

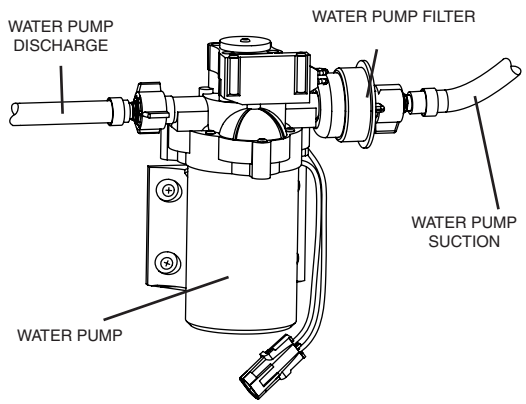

The water pump and filter is located on the port side of the engine room above the water heater. The filter prevents particles from entering the pump head. The filter should be checked and cleaned once a season or when flow is restricted.

Before servicing the system, turn the FRESH WATER PUMP breaker OFF and open a faucet to release pressure on the system. To clean the filter, remove the screen and rinse with clean water. Replace, making sure the O-ring is in place when replacing the cover.

WATER SYSTEM INSTALLATION
(FIG. 7.4.1)

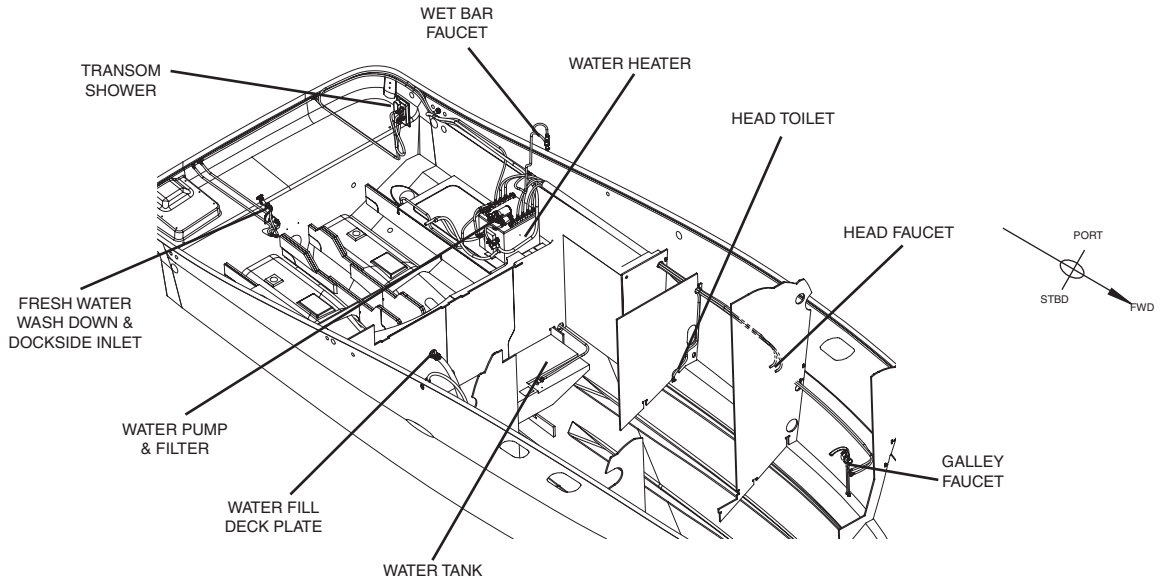

WATER PUMP FILTER
(FIG. 7.4.2)

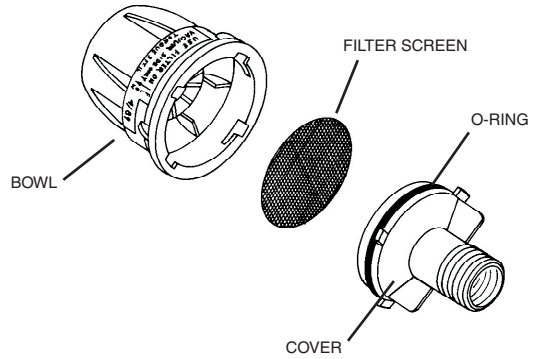

C. WINTERIZING THE WATER SYSTEM

For winterizing the water system refer to *Section 8, Winterization Checklist For Boats Stored on Land, E. Water System.*

D. SHOWER SYSTEM

The shower drains into a self-contained shower sump containing a pump and float switch.

The sump pump is fully automatic and is protected by a breaker on the main DC breaker panel. Check the pump and float switch for obstructions and proper working order.

The pump comes on when there is enough water in the sump to raise the float switch and start the pump. If it does not come on after one or two gallons of water drain from the shower, turn the water off and check the pump and float switch for proper operation.

After using the shower, it is recommended that you run a gallon of clean water through the shower drain to clean out soap residue. Check the pump and float switch for obstructions and proper working order.

SHOWER SUMP INSTALLATION
(FIG. 7.5.1)

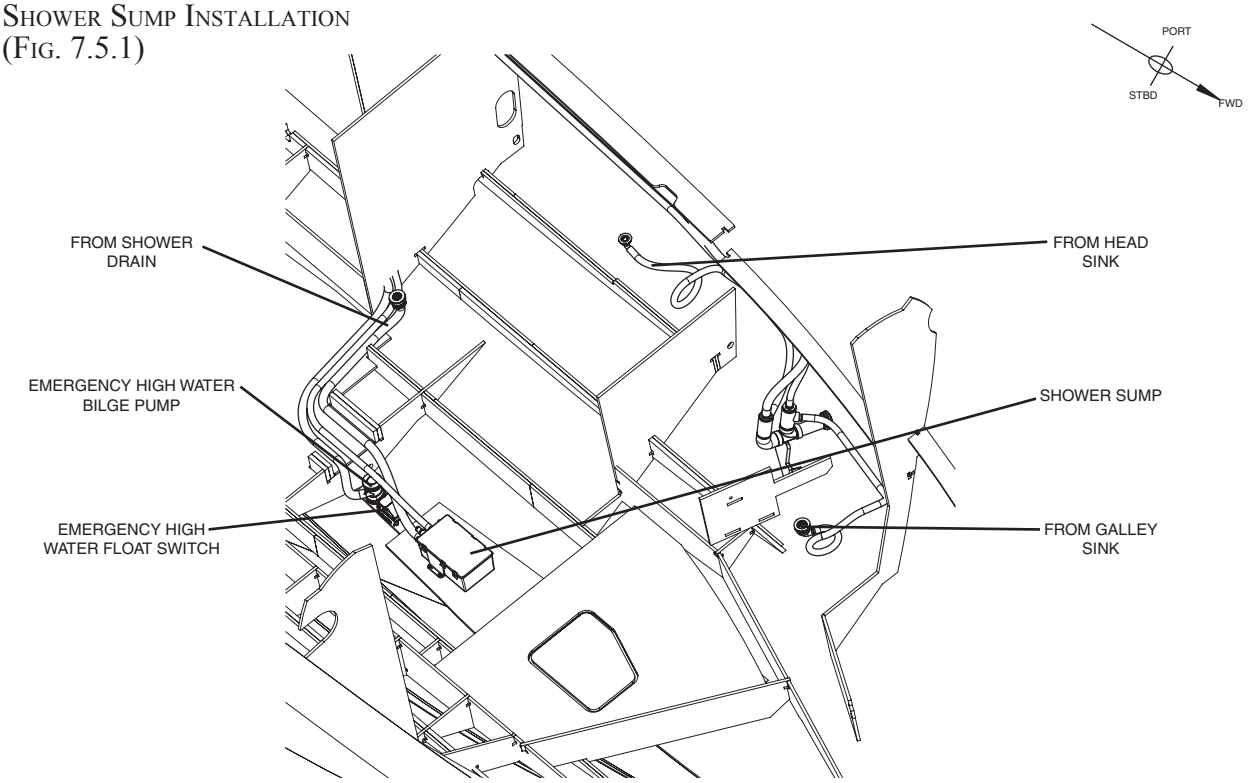

E. TRANSOM SHOWER

The transom shower pullout sprayer is located on the port transom. The system uses both hot and cold water from the fresh water tank. The FRESH WATER PUMP breaker must be ON to operate the system.

F. DOCKSIDE WATER INLET

The dockside water inlet allows use of a dockside water source to provide water for the boat's fresh water system.

TO USE THE SYSTEM:

1. Make sure the FRESH WATER PUMP breaker is OFF.
2. Remove the plug from the face of the dockside water inlet.
3. Connect a drinking water hose to the water outlet on the dock, then to the dockside water inlet on the boat and turn on the water at the dock.

All fresh water faucets and showers are now usable. To disconnect the system, reverse the procedure, making sure the plug is reinstalled tightly.

⚠ WARNING

- **DO NOT leave boat unattended with the dockside water hose connected.**
- **Dockside water should be connected during periods of heavy water usage only.**

TRANSOM STORAGE COMPONENTS
(FIG. 7.5.2)

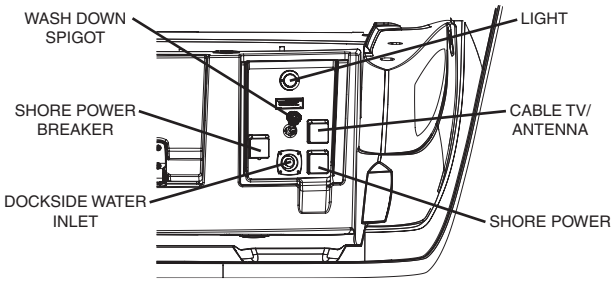

G. Fresh Water Wash Down Spigot

The fresh water wash down spigot is located in the transom storage. The system uses water from the fresh water tank. The FRESH WATER PUMP breaker must be ON to operate the system.

H. Water Heater

The 6 gallon (22.7 liters) water heater is located port and aft of the water tank. The water heater is powered by a breaker on the main distribution panel in the cabin.

The water heater has a check valve to prevent hot water from back washing into the cold water source and a pressure relief valve to avoid damage to the heater from over pressure of excessive temperature.

5. Gray Water System (Option)

The gray water system is designed for boats that are used in areas that restrict overboard water discharge.

The system directs waste water from accessories such as the galley and head sinks and shower to the shower sump that is fitted with a float switch and pump that pumps the water to the head system holding tank. The tank must be emptied when it becomes full.

To empty the head/gray water system holding tank, the services of a dockside pump out station will be needed.

Follow instructions at the station and make sure pump out station hose is inserted into the deck plate marked WASTE.

6. Head System

⚠ CAUTION

Do not flush facial tissue, paper towels or sanitary napkins in head. Such material can damage waste disposal system and the environment.

A. Requirements for Operators

The Environmental Protection Agency (EPA)

Waste Water System
(Fig. 7.6.1)

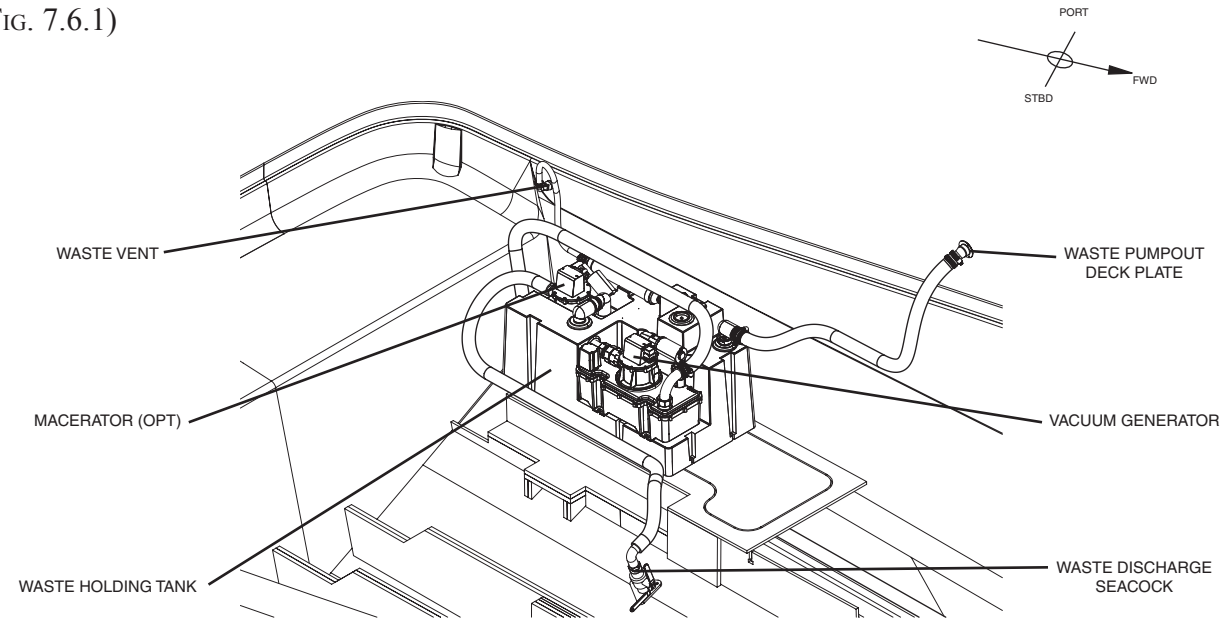

standards state that in freshwater lakes, freshwater reservoirs or other freshwater impoundments whose inlets or outlets are such as to prevent the ingress or egress by vessel traffic subject to this regulation, or in rivers not capable of navigation by interstate vessel traffic subject to this regulation, marine sanitation devices certified by the U.S. Coast Guard installed on all vessels shall be designed and operated to prevent the overboard discharge of sewage, treated or untreated, or of any waste derived from sewage. The EPA standards further state that this shall not be construed to prohibit the carriage of Coast Guard-certified flow-through treatment devices which have been secured so as to prevent such discharges. They also state that waters where a Coast Guard certified marine sanitation device permitting discharge is allowed include coastal waters and estuaries, the Great Lakes and interconnecting waterways, freshwater lakes and impoundments accessible through locks, and other flowing waters that are navigable interstate by vessels subject to this regulation (40 CFR 140.3).

B. VacuFlush® Head

VacuFlush® Head (Fig. 7.7.1)

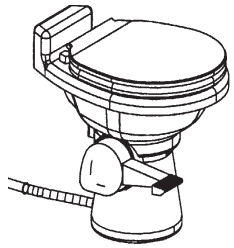

The VacuFlush® head utilizes a HEAD SYSTEM breaker on the main distribution panel. The foot pedal at the base of the toilet opens a mechanical seal and vacuum forces waste through the opening in the bowl to an accumulator tank, through the vacuum pump and then to the holding tank or treatment tank.

To Operate:

1. Turn ON the WATER PUMP breaker.
2. Turn ON the HEAD SYSTEM breaker.

REFER TO OWNER'S MANUAL PACKET FOR INSTRUCTIONS AND WARRANTY INFORMATION.

C. Holding Tank Operation

Waste from the head is directed into the holding tank located in the engine room. The holding tank fluid level indicator is located on the main distribution panel or in the head which indicates 3/4 FULL, FULL and DO NOT FLUSH, or on some models may read FULL, 1/2, or EMPTY. When the FULL light is on, the DO NOT FLUSH light will also be on. When these lights are ON, the holding tank must be emptied before the head can be reused.

Dockside Pump-out

To empty holding tank, the services of a dockside pump out station will be needed. Follow instructions at the station and make sure pump out station hose is inserted into the deck plate marked WASTE. The holding tank can also be emptied through utilization of the macerator (if supplied) (see *Macerator* in this section).

NOTICE

There is a possibility of being fined for having an operable direct overboard discharge in some waters. Close waste discharge seacock and remove handle or take other measures to avoid fine.

D. Vent Filter

The vent filter is designed to control odors associated with the head system operations. The vent filter is located on the holding tank. **The filter must be changed at the beginning of each boating season to be effective.** The vent filter is installed in-line on the holding tank ventilation hose.

Note: Do not over fill the holding tank as this will flood the vent filter and render it useless. Filter replacement will then be required. See Parts Manual for correct replacement filter.

7. MACERATOR DISCHARGE PUMP WITH SEACOCK INTERLOCK SYSTEM (OPTIONAL)

If equipped, the optional macerator (See Figure 7.6.1) gives the boat operator the means of discharging the holding tank contents directly overboard through a seacock in the bottom of the hull. This is available in conjunction with the dockside pump out.

Since direct overboard discharge is prohibited in many areas, the macerator seacock is normally closed. The macerator seacock is equipped with a system interlock switch which prevents the operation of the macerator when the macerator seacock is closed. The light on the DISCHARGE PUMP switch on the DC Distribution Panel will be lighted when the macerator is operational. If the light is not lighted, it is visual confirmation the macerator seacock is closed and that the macerator cannot be operated. Check that the macerator seacock handle is in the open position and the light on the switch is lighted before operating the macerator.

TO OPERATE THE MACERATOR:

1. Turn ON the DISCHARGE PUMP breaker on the salon DC distribution panel and open the waste discharge seacock located on the bilge floor (See Fig. 4.10.1 - 4.12.1) for seacock location).
2. Operate DISCHARGE switch at the WASTE SYSTEM CONTROL area on the main distribution panel.
3. When tank is empty, turn the switch to OFF and close waste discharge seacock.

NOTE: Turn OFF discharge pump to prevent accidental discharge.

NOTICE

This boat may be equipped with an optional overboard discharge valve.

Discharging of sewage directly overboard is for use where approved only.

NOTICE

There is the possibility of being fined for having an operable overboard discharge in U.S. waters. Removing handle of seacock while in closed position, or other means must be utilized to avoid fine.

MAINTENANCE

Prior to each use and at regularly scheduled intervals, cycle the macerator seacock handle open and shut to ensure proper operation of the seacock

8. AUTOMATIC FIRE EXTINGUISHER SYSTEM

AUTOMATIC FIRE EXTINGUISHER (FIG. 7.8.1)

Your boat is equipped with an automatic fire extinguisher system located aft of the engine. In the event of a fire, the heat sensitive automatic head will release the extinguishant as a vapor, totally flooding the area in fire-killing concentrations.

IF ACTUATION OCCURS, IMMEDIATELY SHUT DOWN ALL ENGINES, POWERED VENTILATION, ELECTRICAL SYSTEMS AND EXTINGUISH ALL SMOKING MATERIALS. DO NOT IMMEDIATELY OPEN THE ENGINE COMPARTMENT!! THIS FEEDS OXYGEN TO THE FIRE AND FLASHBACK COULD OCCUR.

Allow the exinguishant to “soak” the compartment for at least fifteen (15) minutes and for hot metals or fuels to cool before cautiously inspecting for cause of fire. Have portable extinguishers at hand and ready. Do not breathe fumes or vapors caused by the fire.

A. GASOLINE ENGINE BOATS

The system indicator light is wired to the ignition and is turned ON when the ignition is turned ON. The indicator light, located on the ignition panel, indicates to the helmsman when the unit has discharged. Under normal circumstances, when the ignition is ON the charge indicator light is ON. If the unit discharges, the light will go OFF.

AUTOMATIC FIRE EXTINGUISHER INDICATOR LIGHT (FIG. 7.9.1)

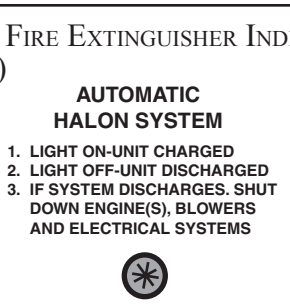

B. DIESEL ENGINE BOATS

The system indicator and switch module (ENGINE SHUTDOWN AND OVERRIDE SYSTEM) operates similarly to the indicator light for the gas engine boats. The module also incorporates an engine shutdown switch with override system. When the system discharges it will shutdown the engine.

AUTOMATIC FIRE EXTINGUISHER INDICATOR LIGHT (DIESEL ENGINE)
(FIG. 7.9.2)

After the engine room has been inspected and it has been determined safe and you are ready to restart the engine, activate the OVERRIDE switch on the ENGINE SHUTDOWN OVERRIDE SYSTEM, then restart the engine.

C. MANUAL FIRE EXTINGUISHING SYSTEM PULL HANDLE

Located at the control station, the manual fire extinguisher system allows the operator to manually activate the automatic extinguisher in the engine room. Early detection and use of the manual override system will reduce fire damage by eliminating the time necessary for heat in the engine room to rise to a temperature necessary to activate the automatic fire extinguisher.

MANUAL FIRE EXTINGUISHING SYSTEM PULL HANDLE (FIG. 7.9.3)

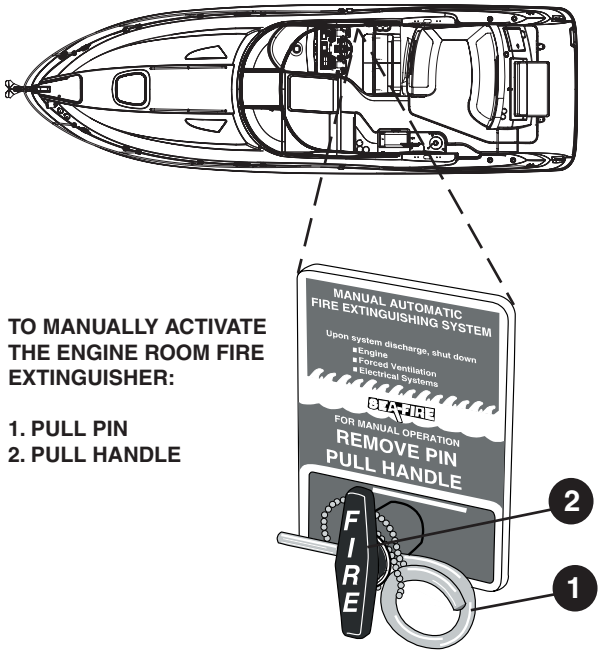

TO OPERATE:

1. Pull pin securing the handle.
2. Pull red FIRE handle quickly and briskly.

D. SAFETY PIN

The safety pin is used on boats equipped with the Manual Fire Extinguishing System Pull Handle. The safety pin, located at the neck of the extinguisher bottle in the engine room is for shipping and transfer of the bottle only. The pin MUST be removed in order to manually operate the system.

ENGINE ROOM FIRE EXTINGUISHER
(FIG. 7.10.1)

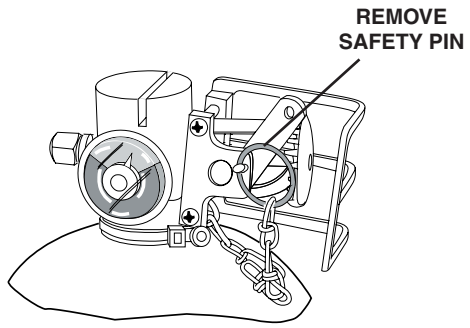

NOTE: THE MANUAL SYSTEM WILL NOT OPERATE IF SAFETY PIN IS INSTALLED.

9. ENTERTAINMENT SYSTEM

The entertainment center equipment options may vary from boat to boat. Refer to the Owner's Manual Packet to find individual instructions for the equipment installed on your boat.

REFER TO OWNER'S MANUAL PACKET FOR INSTRUCTIONS AND WARRANTY INFORMATION.

A. 12 VOLT STEREO

The 12 volt AM/FM radio, single CD, satellite ready stereo is located in the MDP cabinet in the cabin. The system includes six (6) water proof speakers, a subwoofer, a remote MP3 device port, a digital remote control located at the control station and an optional remote on the transom. An optional premium stereo upgrade is available.

The stereo is protected by the stereo breaker on the forward EIM and the amplifiers for the stereo are protected by breakers on the main DC Breaker Panel located under the helm seat. The breaker protection for the stereo memory is on the aft EIM. Power to stereo memory is maintained even if the battery switch is off.

STEREO SYSTEM (12 VOLT AM/FM, SATELLITE RADIO & CD)
(FIG. 7.10.2)

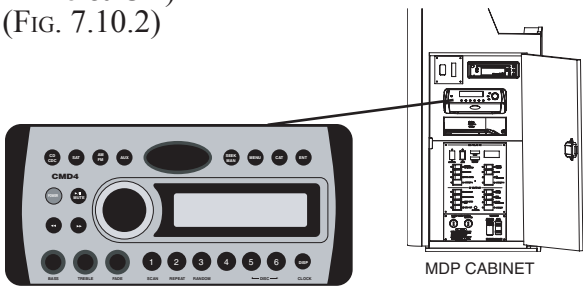

STEREO REMOTE (LOCATED ON THE DASH)
(FIG. 7.10.3)

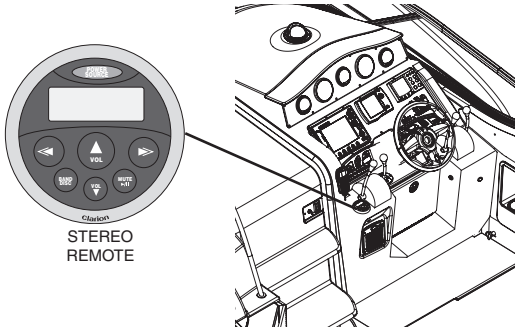

REFER TO OWNER'S MANUAL PACKET FOR INSTRUCTIONS AND WARRANTY INFORMATION.

B. SALON ENTERTAINMENT CENTER (OPTION)

The optional salon entertainment system consists of a 15" flatscreen TV with a remote DVD player, gaming system port and dockside inlet for cable/ antenna hook-up. An additional-* 15" flatscreen TV with remote DVD player and gaming port is also available in the mid stateroom (only in addition to the Salon option).

10. REFRIGERATOR

The refrigerator is protected by a breaker on the main distribution panel located in the cabin.

REFER TO OWNER'S MANUAL PACKET FOR INSTRUCTIONS AND WARRANTY INFORMATION.

⚠ CAUTION

Do not cover refrigerator vents.

11. CANVAS

⚠ DANGER

If the cockpit is totally enclosed with canvas covers and curtains while the engine is running or boat is moving, carbon monoxide will build up and cause death or permanent injury.

Do not use the rear (aft) curtain while engine is running or boat is moving.

Canvas top should not be used when the vessel speed exceeds 45 MPH. Damage to the boat or canvas may occur.

Attached to the inside of the canvas is a DANGER tag for Carbon Monoxide Gas (CO) buildup and a WARNING tag for limiting speeds when canvas is installed. The rear (aft) curtain also has a WARNING tag stating "The Aft Curtain must not be used while engine is running or boat is underway". If your canvas does not have these tags, they become lost or are unable to be read, contact your dealer for replacement labels.

⚠ DANGER

Exhaust fumes from engines contain deadly carbon monoxide gas (CO). Boats enclosed with canvas or with poor ventilation are most likely to collect fumes.

CO sickness symptoms include headache, nausea and dizziness. Do not mistake these symptoms for sea sickness.

Ventilate boat. See Section 1.4, Carbon Monoxide, for more details.

For your safety, decide which canvas pieces you want to remove or install before you leave the boat slip or off-load your boat from the trailer into the water. Removing or installing canvas on the water can be difficult since rough water or wakes can cause you or your passengers to lose their balance while attempting canvas removal or installation.

For safety and ease of installation and removal of canvas, use at least two people. Know which canvas piece(s) that you are to install or remove.

The Standard Canvas Package consists of:

Aft Curtain	Aft Sunshade
Front Curtains	Side Curtains
Canvas Storage Bag	

A Canvas Cockpit Cover is available as an individual option.

⚠ DANGER

In rainy weather and/or cold weather, fresh air must circulate through boat to avoid carbon monoxide poisoning.

See Section 1.4, Carbon Monoxide, for more details.

A. INSTALLATION TIPS

- Zippers: Zippers are located on each canvas piece. Make sure canvas is centered over the metal canvas support rods (bows). When attaching any canvas piece, zip the zippers only partially. This helps to hold the piece in place and relieves tension, helping the other sides zip or snap easier. After all the sides of the piece are snapped in place, finish zipping all the zippers. This will ensure a tight fit.
- Adjustable Support Rods: Adjustable support rods are located on the canvas top. There is an outside tube and an inside tube. Push in the button to adjust for longer or shorter rod lengths.

B. CANVAS CARE AND MAINTENANCE

See Section 9, for instructions on the care and maintenance of your canvas.

12. HORN

The horn is operated by a momentary switch on the dash and is protected by a breaker on the forward EIM located behind the access panel at the helm.

REFER TO OWNER'S MANUAL PACKET FOR INSTRUCTIONS AND WARRANTY INFORMATION.

13. SPOT LIGHT (OPTIONAL)

The spot light is protected by a breaker on the forward EIM located behind the access panel at the helm.

TO OPERATE THE SPOT LIGHT:

1. Press the POWER button on the spot light control pad.
2. Move the toggle switch to direct the spot light.

REFER TO OWNER'S MANUAL PACKET FOR INSTRUCTIONS AND WARRANTY INFORMATION.

14. UNDERWATER LIGHTING (OPTIONAL)

The underwater lights, mounted on the swim platform, are protected by a breaker on the aft EIM and are operated by the ACCY 2 switch on the starboard switch pad at the helm (See Fig. 2.9.2).

UNDERWATER LIGHTS
(FIG. 7.12.1)

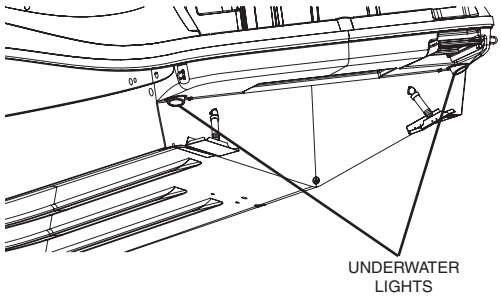

Routine inspection, service and maintenance of your boat's systems are vital to assure your safety, as well as for prolonging the life of your boat. You should develop regular routines for inspecting your boat. The chart below summarizes inspection, service and maintenance activities. This section also contains descriptions of some convenient methods for evaluating the condition of some of your boat's systems.

The interval between necessary service or maintenance is highly variable, depending on the environment your boat is in, and on the severity of operating conditions. For example, corrosion of parts on boats operated in salt water proceeds much faster than the corrosion of parts on a boat operated in fresh water. The intervals listed below are recommended maximums, and you must reduce the time between inspections if your observations indicate the need.

1. SUMMARY GUIDE FOR INSPECTION, SERVICE AND MAINTENANCE

			INTERVAL				
ITEM	REQUIRED MAINTENANCE/SERVICE	REFERENCE SOURCE	BEFORE EVERY USE	AFTER FIRST 20 HOURS	EVERY 25* OR 50 HOURS	EVERY 50* OR 100 HOURS	EVERY 6 MOS. OR ANNUALLY
Battery	Check water level	Owner's Manual p. 6.1	•	•	•		
Bilge Area	Clean and check	Owner's Manual p. 4.1					•
Bilge Blower	Hose connections tight	Owner's Manual p. 4.3			•		•
Bilge Pump	Float switch operates freely	Owner's Manual p. 4.1					•
Canvas	Clean	Owner's Manual p. 9.3	As Needed				
Controls							
Steering	Check for proper operation		To be done by Sea Ray dealer every six months				
	Power steering oil level	Engine Manual	•				
Gear Shift & Throttle	Lubricate. Include all shift	Engine Manual		•		•	•
	linkage and pivot points						
Electrical							
Connections	Check for looseness		To be done by Sea Ray dealer annually				
***GFCI (AC) Outlet*	Check for operation	Owner's Manual p. 6.12					•
Engine							
Alarm	Check	Engine Manual	•				
Cooling System	Check for leaks	Engine Manual	•				
Connections	with engine running						
Crankcase ventilating system	Clean	Engine Manual		•		•	
Drive belts	Check	Engine Manual	•				
Exhaust System	Check for leaks	Engine Manual	•	•		•	
Flame Arrestor	Clean	Engine Manual		•		•	
Fuel Filter	Replace	Engine Manual				•	
Mounts (Fasteners)	Tighten	Engine Manual		•			•
Oil and Filter	Replace	Engine Manual				•	•
Oil Level	Check	Engine Manual	•				
Stern Drive (With Stern Drive Engine Option)							
Fluid level	Check level	Engine Manual	•				
Fluid	Replace	Engine Manual					•

**Use in salt water or other severe operating conditions requires shorter maintenance/service intervals*

***May not be on your boat*

SUMMARY GUIDE FOR INSPECTION, SERVICE AND MAINTENANCE

			INTERVAL				
ITEM	**REQUIRED MAINTENANCE/SERVICE**	**REFERENCE SOURCE**	**BEFORE EVERY USE**	**AFTER FIRST 20 HOURS**	**EVERY 25* OR 50 HOURS**	**EVERY 50* OR 100 HOURS**	**EVERY 6 MOS. OR ANNUALLY**
Fuel System							
Connections & Lines	Check for leaks	Engine Manual	•	•	•		
Tank	Check for leaks	Owner's Manual p. 5.1	•	•	•		
Water Separating Fuel Filter	Replace	Engine Manual		•			•
Sliding Seats and Ladder							
Helm Seat	Spray slider with light coating of spray lubricant				•		
Transom Swim Ladder	Spray slider with light coating of spray lubricant				•		
Propeller	Inspect for damage		Always after striking object				
Seaworthiness							
Bilge drain plug	Installed and tight	Owner's Manual p. 4.1	•				
Hull damage Stern drive	Check for loose, damaged or missing parts		Always after striking object				
Topside & Supplies	Check for loose, damaged or missing parts	Owner's Manual p. 8.5					•
Anchor rope	Check rope for wear						•
Transmission							
Oil Strainer Screen	Clean		To be done by Sea Ray dealer annually				
Trim Tabs							
Fluid	Check and add as needed	Trim Tab Manual		•			
Zincs							
Transom Zinc	Check and replace as needed	Owner's Manual p. 6.14	Every 25 hours of operation				
Trim Tabs	Check and replace as needed	Trim Tab Manual	Every 25 hours of operation				

***Use in salt water or other severe operating conditions requires shorter maintenance/service intervals**

****May not be on your boat**

2. USEFUL SERVICE INFORMATION

OWNER _____

HOME PORT _____

BOAT NAME _____

REGISTRATION NUMBER _____ STATE _____

HULL SERIAL NUMBER _____

WARRANTY REGISTRATION DATE _____

ENGINE MAKE & MODEL _____

SERIAL NUMBER _____

PART NUMBER _____

FUEL CAPACITY _____

WATER CAPACITY _____

KEY NUMBER, IGNITION _____ DOOR _____

SELLING DEALER _____

CITY & STATE _____

LENGTH _____ BEAM _____ DRAFT _____

VERTICAL CLEARANCE _____

ESTIMATED WEIGHT _____

GENERATOR SERIAL # _____ MODEL # _____ KILOWATTS _____

3. Inspection, Service and Maintenance Protocol

A. Bilge Area

Many of your boat's systems have critical features located in the bilge area. A thorough and organized inspection of the bilge area will address many of these critical features. For example, engine oil leaks and fuel system leaks will show themselves as contamination on the surface of the liquid that remains in the bilge. When you see such contamination, you should look for its source.

Once or twice a year, pump the bilge areas dry and remove all loose dirt. Be sure that all the limber holes are open. Limber holes are the openings in the stringers that allow water to flow from the outboard areas of the bilge to the bilge sump.

Check the bilge pump float switch by moving it manually. (See Fig. 4.1.2) The bilge pump should start when the float switch is raised and should stop when lowered. If it does not, first try resetting the bilge pump breakers, if the pump will still not run replace the float switch before using your boat. The float switch should also move freely without sticking, if it does not, have it serviced or replaced before boating.

⚠ WARNING

DO NOT USE FLAMMABLE SOLVENTS to clean any part of the bilge.

Fumes can accumulate and can be the source of an explosion.

1. Oil

If there is oil contamination, look for leaks in engine oil lines and engine gaskets. If parts of the bilge have been stained by oil, the stain can be removed using a bilge cleaner available from your dealer or a marine store.

2. Engine

Engine failure or malfunction, when away from shore, can be dangerous. Make certain you do the following each time you use the boat:

- Wipe off the engine to remove accumulated dust, grease and oil.
- Check all exposed nuts, bolts and screws for tightness.
- Inspect the belts for wear. If they do not require replacement, check and adjust the belt tension according to the engine manufacturer's recommendation.
- Inspect engine wiring, and clean and tighten the terminals on the engine electrical system.
- Clean and lubricate the battery cables.
- Add distilled water to the battery cells as needed.
- Refer to your Engine Operator's Manual for additional engine maintenance requirements.

3. Fuel System

- Inspect the entire fuel system for evidence of leakage, including the fuel tank fill lines and vents. Any stain around a joint could be an indication of a leak.
- Test all fittings with a wrench to be sure they are not loose, but do not forcefully overtighten the fittings.
- Clean fuel filters and vent screens.

⚠ WARNING

Work on electrical wiring can create shock hazards or sparks.

Always shut off battery switch, breakers and/or pull fuses before checking electrical wiring or connectors.

4. Wiring System

- Check all wiring for proper support.
- Check all wiring insulation for signs of fraying or chafing.
- Check all terminals for corrosion - corroded terminals and connectors should be replaced or thoroughly cleaned.
- Tighten all terminals securely and spray them with light marine preservative oil.

5. Fittings, Hoses and Clamps

- Inspect the entire bilge area for evidence of damage or deterioration. Evidence of deterioration will first appear around hull fittings, hoses and clamps.
- Straighten kinked hoses.
- Replace any hose that does not feel pliable.
- Check all hose clamps for tightness and corrosion. Corroded clamps must be replaced.
- Check the nuts, bolts and screws that retain equipment, hoses, etc. in the bilge for tightness and corrosion. Corroded fasteners must be replaced.

B. Topside and Supplies

Once a year, you should undertake a thorough review of the topside equipment, as well as of the critical safety supplies on your boat.

- Check cleats, rings, rails, etc. for loose or corroded fasteners, breaks, sharp edges or other conditions that could lead to malfunction or unsafe use. Repair or replace as necessary.
- Inspect PFDs (life jackets) for tears and deterioration.
- Make certain you have enough PFDs on board for the maximum number of persons you can carry.
- Check your first aid kit, making certain it is complete and that the items in it have not passed an expiration date.
- Check the signaling equipment and emergency flares. Make sure all items are within their expiration dates.
- Inspect the anchor, mooring and towing lines. Repair or replace as required.
- Check fire extinguishers for full charge.

4. Winterization Checklist for Boats Stored on Land

A. Boat Storage

- Store boat in a bow high attitude.
- Remove hull drain plug.
- Pour one (1) pint (half-liter) of 50% water/antifreeze mixture in each bilge pump sump.

B. Engines

- Flush engines with fresh water.
- Remove engine drain plugs.

REFER TO YOUR ENGINE OPERATOR'S MANUAL FOR DETAILED INFORMATION ON PREPARING THE ENGINES FOR STORAGE AND WINTERIZATION.

C. Battery(ies)

- Remove from boat. Remove the negative (-) cable first, then the positive (+) cable.
- Remove grease and dirt from top surface.
- Grease terminal bolts.
- Store on wooden pallet or thick plastic in a cool dry place. Do not store on concrete.

- Keep under a trickle charge.
- When placing battery back into service, remove excess grease from terminals, recharge as necessary and reinstall in boat.

D. HEAD SYSTEM

- Flush entire system thoroughly with fresh water.
- Pump out holding tank.
- Remove water line from inlet fitting located on back bottom half of water valve on head.
- Flush one gallon (four liters) antifreeze mixed with one gallon (four liters) of water through toilet and let vacuum pump run for one or two minutes.
- Shut FRESH WATER PUMP breaker OFF.
- Pump out holding tank.

E. WATER SYSTEM

- Turn ON the FRESH WATER PUMP breaker.
- Open water faucet, let system drain completely.
- Turn OFF the FRESH WATER PUMP breaker.
- Water must be removed from the water lines with air pressure or flushed with a nontoxic antifreeze.

USING PRESSURIZED AIR TO REMOVE WATER FROM WATER LINES:

- You must have an air compressor with air hose and air nozzle.
- Remove water hoses from water pump.
- Alternate opening one faucet at a time to make sure water is removed from each line.
- Blow air through the water lines removed from the water pump.

NOTE: When blowing air be careful not to blow air with all faucets closed. System could be damaged by over pressurization and create water leaks.

- Cover hose ends with screen or broad weave cloth and tape in place to keep out dirt and bugs.

USING NONTOXIC WINTERIZING ANTIFREEZE:

- Purchase a nontoxic winterizing antifreeze for fresh water systems from a marine or RV supply retailer.
- With all water pumped out of the system add nontoxic antifreeze to the water tank. Pour in enough to be pumped to all faucets and showers.
- Close all faucets and turn on water system.
- Open one faucet at a time. Close faucet when nontoxic antifreeze comes out of faucet.
- After all faucets and showers have been treated, open all faucets and pump out remaining nontoxic antifreeze.

WATER HEATER WINTERIZATION

- Refer to your water heater Owner's Manual for detailed information on preparing water heater for storage and winterization.

F. FUEL SYSTEMS

GASOLINE:

- Fill fuel tank with gasoline and the recommended amount of stabilizer and conditioner such as "Stabil®".
- Run engine(s) for ten minutes to ensure that all gasoline in the carburetor and fuel lines are treated.

DIESEL:

- Fill fuel tank with diesel and recommended amount of biocide, "Biobor®", which prevents bacteria and fungi from contaminating diesel fuel that contains some water.
- Diesel fuel should also get a petroleum distillate additive, such as "Stabil®" or Racor® RX100". This will absorb water in the fuel and prevent freezing problems.
- Run engine(s) for ten minutes to ensure that all diesel fuel in injectors and fuel lines is treated.

DETAILEDWINTERIZING,OPERATINGINSTRUCTIONS AND WARRANTY INFORMATION ARE PROVIDED BY THE EQUIPMENT MANUFACTURER AND CAN BE FOUND IN THE OWNER'S PACKET.

⚠ CAUTION

Do not overfill. Filling a tank until the fuel flows from vents is dangerous. Allow room for expansion.

5. FITTING OUT AFTER STORAGE

A. FUEL SYSTEM

Check the entire fuel system for loose connections, worn hoses, leaks, etc. and repair. This is a primary safety precaution.

Check fuel lines for damage and make sure that they do not come in contact with any moving parts.

B. BATTERY(IES)

Before installing the batteries, clean the terminal posts with a wire brush or steel wool and then attach the cables. After the cable clamps are tightened, smear the post and clamps with vaseline or grease to exclude air and acid. Do not apply grease before attaching and tightening the terminal clamps. Examine all wiring.

C. MISCELLANEOUS

- Check all thru-hull fittings for unobstructed water passage. Be alert for any deteriorated hoses and/or fittings below the water line which might fail in service and admit water.
- Test the navigation lights.
- Check all wiring for loose connections.
- Check all switches and equipment for proper operation.
- Check bilge blowers for proper operation. Turn ON blowers and place hand over hull blower vent to make sure air is coming from vent.
- Anchor lines and gear should be inspected and replaced if necessary.
- Make sure the hull drain plug is in place and tight.
- Clean bilge thoroughly if it was not done at lay-up.
- Check all engine fluid levels.
- Check fuel lines for damage and/or leaks. Make sure that they do not come into contact with moving parts.

6. SECURITY CONSIDERATIONS

Be conscious of the security of your boat. Always remove the keys from the ignition, lock hatches, lock the cabin door, remove and stow any removable electronic gear (fish finders, GPS, etc.) and personal gear (fishing poles, etc.) normally left aboard your boat.

7. SEACOCK LUBRICATION

- With boat out of water, remove the hose from top of the seacock.
- Put seacock handle in closed position.
- Add a few drops of lubricating oil inside.
- Work handle back and forth a few times. Add oil as needed.
- Replace hose and tighten clamp.
- Add a few drops of oil to the handle pivot point.

SEACOCK
(FIG. 8.8.1)

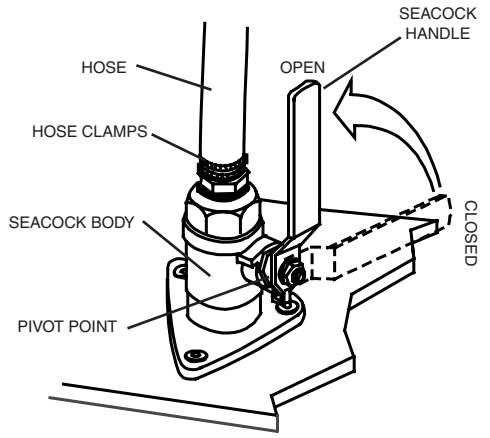

8. QUICK REFERENCE CHECKLIST

As the owner/operator of a Sea Ray® boat, you are responsible for the safe operation of your boat and the safety of your passengers. Always be sure that required documents, navigational equipment and Coast Guard required safety equipment is aboard and in proper working order.

A. BOARDING THE BOAT*

GENERAL

1. Weather Conditions ..... Is it going to be safe to go out
2. Transom Drain Plug ..... Installed
3. PFDs and all other Coast Guard required safety equipment ..... Available for all children and adults
4. Ignition keys ..... Available
5. Tool Box ..... Stocked with a variety of appropriate tools

BOAT SYSTEMS

1. Bilge Pumps ..... Working. Discharge any appreciable amounts of water overboard
2. Blowers ..... Working. "Sniff" the bilge/engine compartment for fuel odor
3. Navigation Lights ..... Working. Have spare bulbs (and if applicable fuses) aboard
4. Radio/Electronics ..... Working
5. Horn ..... Working
6. Trim Tabs ..... Full range of motion. No excessive play or binding
7. Fresh Water Tank ..... Filled and sanitized
8. Head System Holding Tank ..... Empty
9. Seacocks ..... Engines & Generator Open (handle parallel to hose), Head System Holding Tank Closed (handle perpendicular to hose)

ENGINE

1. Batteries ..... Fully charged (Check water cell levels)
2. Fuel Tank ..... Filled with recommended fuel
3. Fuel System ..... Check for leaks
4. Fuel Filters ..... Check that filters are clean and tight
5. Diesel Racor Fuel Filters ..... Check that filters are clean, tight and free of water
6. Engine Coolant Drain Plug ..... Secured
7. Steering Fluid ..... Full
8. Throttle & Gearshift Control Test ..... Full range of motion

***Note:** Many of these items should be checked before leaving the house.

QUICK REFERENCE CHECKLIST (CONT'D)

B. PREPARING TO DEPART AND AFTER LAUNCHING

GENERAL

1. Bilge/Engine Compartment ..... "Sniff" the bilge/engine compartment for fuel odor. Run the bilge blowers for at least four (4) minutes.
2. Shore Power Cable..... Disconnected from dockside power inlet
3. Lines, Fenders and Anchor..... Ready for use
4. Passengers/Crew ..... Instructed in duties for getting underway and fitted for a correct size PFD

ENGINE

1. Battery Switches..... In the ON position
2. Fuel Valves (Diesel Only) ..... Open
3. Engine Alarm..... Test. Should sound after a few seconds
4. Gear Shift & Throttle Control ..... In NEUTRAL and IDLE positions

STARTING THE ENGINE*

1. Gearshift & Throttle Control..... Shift in NEUTRAL (Refer to your Engine Owner's Manual for start-up procedures for your specific engine)
2. Ignition..... Turn master ignition keys on DC distribution panel to the ON position. Depress ignition switch on the helm switch panel to START position until engine starts, then release to RUN position (light on).

IMPORTANT: Do not continue to operate starter for more than 10 seconds without pausing to allow starter motor to cool off for 2 minutes. This also will allow the battery to recover between starting attempts.*

⚠ WARNING

Do not run the engine or generator in an enclosed area, such as a closed boat house, as there is the possibility of buildup and inhaling of carbon monoxide.

*If engine fails to start, refer to the Engine Owner's Manual for further troubleshooting procedures

QUICK REFERENCE CHECKLIST (CONT'D)

C. WHILE UNDERWAY

GENERAL

1. Passengers/Crew ..... Safely seated with PFDs on or immediately accessible
2. Lines, Fenders and Anchor..... Stowed

BOAT SYSTEMS

1. Trim Tabs ..... Bring boat to "On Plane". Adjust as necessary
2. Navigation Lights ..... On at night or in reduced visibility

ENGINE

1. Tachometer..... Engines operating in safe RPM range
2. Engine Gauges..... Continually monitor
3. Engine Operation..... Check idle and shift. Listen for abnormal noises and visually check the engine compartment while underway

D. RETURNING TO PORT

GENERAL

1. Passengers/Crew ..... Instructed in duties for line handling
2. Lines and Fenders..... Ready for use

BOAT SYSTEMS

1. Navigation Lights ..... Turned OFF when secured
2. Anchor Light ..... ON if necessary
3. Bilge/Engine Compartment ..... "Sniff" the bilge/engine compartment for fuel odor. Run the bilge blowers if necessary. Check for water in bilge. Run bilge pumps if necessary

ENGINE

1. Throttle & Gearshift Control..... Bring to IDLE and NEUTRAL positions
2. Tachometer..... Idle the engines for five (5) minutes to cool down

QUICK REFERENCE CHECKLIST (CONT'D)

3. Ignition ..... Depress ENGINE STOP switches on the helm switch panel when engines are cooled down.
4. Engine Operation..... Check idle and shift. Listen for abnormal noises

E. SECURING THE BOAT

GENERAL

1. Lines and Fenders ..... Fenders in place, lines tied securely to dock
2. Shore Power Cable ..... Connected to dockside power inlet

BOAT SYSTEMS

1. Seacocks ..... Closed (handle perpendicular to hose)
2. Helm Switch Panel..... All switches in the OFF position
3. Gearshift & Throttle Control ..... In the NEUTRAL and IDLE positions

ENGINE

1. Ignition ..... Switched in the OFF position (lights off) and master ignition keys removed from DC distribution panel
2. Battery Switch ..... In the OFF position
1. Fuel Valves (Diesel Only) ..... Closed (handle perpendicular to hose)

F. IF THE ENGINE DOES NOT START

NO STARTER MOTOR RESPONSE

1. Check gearshift control lever in the NEUTRAL position
2. Check battery condition for sufficient charge
3. Check battery cable connections tight and free from corrosion
4. Check battery switch in the ON position
5. Check starter motor and solenoid connections
6. Check ignition switch connections

STARTER MOTOR RESPONDS, BUT NO IGNITION

1. Check that fuel tanks are not empty
2. Check fuel filters and filter/water separators clean
3. Check electrical connections on engine wiring harness and ignition wiring

9. AFTER MARKET EQUIPMENT CHECKLIST

Any safety or operational equipment added to your boat after delivery should be checked for seaworthiness and proper working condition. Use the area below to list any equipment and the proper operating condition of that equipment before getting underway.

Equipment	Proper Operating Condition

10. MAINTENANCE LOG

Follow the recommended maintenance listed on pages 1 & 2 of this section and keep a record of this and ALL maintenance performed on your boat. You might want to copy these pages before using them to have blank ones available when these are full.

Date	Maintenance Description	Engine Hours

Your new boat has been designed to provide you with years of enjoyment and satisfaction. In order to maintain the factory new appearance of your boat, we recommend the use of Yacht Brite® marine cleaning products designed specifically for pleasure boats. Following proper fiberglass maintenance guidelines will help maintain your boat's performance, value, and enjoyment.

1. Paint Cleaning Agents and Other Substances

⚠ WARNING

EXPLOSION/FIRE HAZARD

Care and refinishing materials may contain ingredients that are flammable or explosive. Do not use such materials in the bilge

Shut off electrical power and ventilate when using such materials anywhere on the boat or in the cabin.

Do not create sparks or use lighted materials.

Do not use products containing chlorine, phosphates, perfumes and nondegradable ingredients. Consult your marine dealer regarding environmental regulations before painting the hull. Fumes can last for hours, and chemical ingredients can harm people, property and the environment. Common household cleaning agents may cause hazardous reactions. Read and understand directions on all paint, cleaning and polishing materials before using.

2. Fiberglass and Gelcoat

The fiberglass hull, deck and some interior parts consist of a molded shell and exterior gelcoat. The gelcoat is the outer surface, often colored, that presents the shiny smooth appearance associated with fiberglass products. This gelcoat surface is painted or taped in some areas for styling purposes.

Wash the gelcoat and fiberglass regularly with clean, fresh water. Wax gelcoat surfaces to maintain the luster. In northern climates, a waxing at the start and end of the boating season may suffice. In southern climates, an application of wax every three months will be required for adequate protection.

⚠ WARNING

Gelcoat surfaces are slippery when wet.

Always wear nonslip footwear securely fastened to your feet and hold on to rails or the boat structure.

⚠ WARNING

Waxed surfaces are slippery.

Do not wax areas that are usually walked on.

REFER TO THE "3M® ONE STEP MAINTENANCE AND RECONDITIONING PRODUCTS" PAMPHLET IN YOUR OWNER'S MANUAL PACKET FOR INSTRUCTIONS AND WARRANTY INFORMATION.

A. Keep Bilge Area Dry

Water may accumulate in the engine room where it is not able to drain to the bilge pump. Check all areas of the engine room for accumulated water and dry thoroughly. Water left standing may penetrate through the gelcoat surfaces and wick into the fiberglass affecting the life of the product.

3. Stains and Scratches

Although gelcoat and painted surfaces are resistant to deep stains, a need for cleaning will occasionally arise. But, the use of some common cleaning agents will permanently discolor or otherwise damage the finish on your boat.

- Do not use abrasive porcelain-cleaning powders. These are too abrasive and contain chlorine and ammonia, either of which will permanently discolor gelcoat and paint.
- Never use nail polish remover (acetone) or any ketone solvents.
- Use diluted household detergents to remove surface soil and stains. Before using a given brand, check to make sure it contains no chlorine or ammonia.
- Alcohol can be used to remove difficult stains. But it must be promptly washed off with mild detergent and water.
- Minor scratches and deeper stains that do not penetrate the gelcoat may be removed by light sanding and buffing.

4. Permanently Moored or Docked Boats

If permanently moored in salt water or fresh water, your boat will collect marine growth on its bottom. This will detract from the boat's beauty and greatly affect its performance. There are two methods of preventing this:

- Periodically haul the boat out of the water and scrub the bottom with a bristle brush and a solution of soap and water.
- Paint the hull below the waterline with a good grade of antifouling paint. **DO NOT paint the engine drive surfaces.**

NOTE: There are EPA regulations regarding bottom paint application. Consult your Sea Ray® dealer for proper application methods.

5. Care for Bottom Paint

From time to time a slight algae or slime forms on all vessels. The bottom painted portion of the hull can be wiped off with a coarse Turkish towel or a piece of old rug while the boat is in the water. Do not use a stiff or abrasive material to clean the bottom paint.

The bottom paint should be inspected annually. If it needs repainting consult your Sea Ray® dealer.

6. Topside Areas

A. Stainless Steel and Alloy Fittings

Stainless steel and alloy fittings should be cleaned with soap and water or household glass cleaner. Remove rust spots as soon as possible with a brass, silver or chrome cleaner. Irreversible pitting will develop under rust that remains for any period of time. Never use an abrasive like sandpaper or steel wool on stainless. These may actually cause rust. To help protect the stainless, we recommend the use of a good car wax.

B. Salt Crystals

When instruments are exposed to a saltwater environment, salt crystals may form on the bezel and the plastic covers. These salt crystals should be removed with a soft, damp cloth; never use abrasives or rough, dirty cloths to wipe plastic parts. Mild household detergents or plastic cleaners can be used to keep the instruments bright and clean.

REFER TO THE OWNER'S MANUAL PACKET FOR INSTRUCTIONS AND WARRANTY INFORMATION.

7. Gauge and Switch Panels

No special care is needed. Just wipe off with a soft, fresh water damp cloth to remove dust or salt. Dry after with chamois or soft cloth. Use of protective chemicals is not required.

NOTE: Do not use any chemicals to clean or protect gauge lenses.

8. Acrylic Plastic Sheeting (Plastic Glass)

Never use a dry cloth or duster or glass cleaning solutions on acrylic.

To clean acrylic, first flood it with water to wash off as much dirt as possible. Next, use your bare hand, with plenty of water, to feel and dislodge any caked dirt or mud. A soft, grit-free cloth may then be used with a nonabrasive soap or detergent. A soft sponge, kept clean for this purpose, is excellent. Blot dry with a clean damp chamois.

Grease and oil may be removed from acrylic with kerosene, hexane, white (not aviation or ethyl) gasoline or aliphatic naphtha (no aromatic content).

Do not use solvents such as acetone, silicone spray, benzine, carbon tetrachloride, fire extinguisher fluid, dry cleaning fluid or lacquer thinner on acrylic, since they attack the surface.

Remove fine scratches with fine automotive acrylic rubbing and polishing compounds.

9. Canvas and Clear Vinyl

Do not fold or store any of the canvas pieces while wet. All canvas should be rolled or folded when dry and stored in a clean, dry place. For clear vinyl pieces, the recommended methods for storage are rolling or laying down flat. The clear vinyl should never be folded or creased as cracking will result. To protect the clear vinyl from rubbing against itself while rolled or stored flat, place a piece of very soft, nonabrasive cloth between the pieces. If the surface of the clear vinyl becomes scratched, the canvas manufacturer has provided a canvas care sheet located in your Owner's Manual Packet. When storing the rear (aft) curtain, fold the canvas over the clear vinyl window (do not fold clear vinyl), then roll or store flat.

The fabric should be cleaned regularly before substances such as dirt, pollen, etc. are allowed to accumulate on and become embedded in the fabric. The fabric can be cleaned without being removed from the installation. Simply brush off any loose dirt, particles, etc.; hose down and clean with a mild solution of a natural soap in lukewarm water (no more than 100°F, 38°C); rinse thoroughly to remove soap. DO NOT USE DETERGENTS. Allow to completely dry.

Wash and clean vinyl windows with a warm soap solution. Use a soft cloth or sponge and do not scratch the surface.

If you have stubborn cleaning cases, call your dealer for proper procedures. Do not try your own cleaning procedures as they may permanently damage the canvas.

After each use, especially in salt water areas, rinse the canvas completely with fresh cold water. Then let the canvas dry completely before stowing.

All metal components of the canvas should be rinsed with fresh cold water and exposed components wiped dry to maintain appearance and working order.

10. EXTERIOR UPHOLSTERY FABRIC

Exterior fabrics should be cleaned with a sponge or very soft scrub brush and a mild soap and warm water solution. After scrubbing, rinse with plenty of cold, clean water and allow the fabric to air dry in a well ventilated place, preferably away from direct sunlight.

Mildew can occur if your boat does not have adequate ventilation. Heat alone will not prevent mildew; you must also provide for fresh air circulation.

REFER TO THE OWNER'S MANUAL PACKET FOR INSTRUCTIONS AND WARRANTY INFORMATION.

11. INTERIOR UPHOLSTERY FABRIC

Cleaning and maintenance information provided by the material manufacturer, is in your Owner's Manual Packet.

NOTICE

Always clean spots, stains, etc., immediately. Test an unseen area of fabric before cleaning stain, to insure that cleaning material will not cause damage.

REFER TO THE OWNER'S MANUAL PACKET FOR INSTRUCTIONS AND OTHER CLEANING INFORMATION.

Index

Symbols

12 Volt Accessory Receptacle 6.9

A

Air Conditioning 7.1

B

Batteries. *See* Electrical System - DC
Battery Charger 6.13
Bilge
- Blower 4.2
- Layout 4.10,4.11,4.12
- Maintenance 4.2,8.4
- Pump 4.1

Bilge Component Board 6.7
Boarding 3.3
Bottom Paint 9.2
Breakers & Fuses. *See* Electrical System
Builder's Plate 1.6

C

Canvas 7.11,9.3
Carbon Monoxide 1.2,7.1
Certifications
- CE (Common European) mark v
- NMMA (National Marine Manufacturers Assoc.) .. v

Clearances 2.5
Cleats 2.1
Compass 2.17

D

Digital Throttle & Shift Control (DTS) 2.14
Dimensions 2.5
Diving 1.10
Docking 2.1
Dockside Pump-out 7.7
Dockside Water 7.5
Drain Plug 4.1

E

Electrical Schematics 6.16
Electrical System - AC 6.9
- GFI Receptacles 6.14
- Main Distribution Panel 6.12
- RCCB Recepatcle 6.15
- Shore Power 3.8

Electrical System - DC 6.1
- Batteries 6.1
- Battery Cable Routing 6.2,6.3
- Battery Switch 6.4
- Bilge Component Board 6.7
- Electronic Interface Module (EIM) 6.6
- Fuses 6.4
- Main DC Breaker Panel 6.8
- Main Distribution Panel 6.12

Electrolytic Corrosion 6.15
Emergency Situations 1.11
Engine
- Maintenance 8.4
- Maintenance and Service 4.3
- Starting 3.4
- Stopping 3.6

Entertainment Center 7.10

F

Failure: Propulsion, Control or Steering 1.13
Fiberglass, Care & Cleaning 9.1
Fire Extinguisher 1.2
Fire Extinguisher System 7.8
Fire Extinguishing System 1.2
Flooding 1.12
Fuel System
- Electric Fuel Valve 5.1
- Fueling 3.2
- Fuel Fill 5.5
- Fuel Filter 5.3
- Fuel Gauge 2.16
- Maintenance 8.4
- Static Electrical Discharge 5.4

Fuses 6.4

INDEX

G

Galvanic Isolator 6.15
Gear Shift and Throttle Control 2.13
Gelcoat, Care & Cleaning 9.1
Generator 6.13
    Starting & Stopping 3.7
Gray Water System 7.6,viii

H

Head System 7.6,8.6
Holding Tank 7.7
Horn 7.12
Hull
    Identification Number (HIN) iv
    Through-Hull Cutouts 2.11,2.12

I

Ignition Protection 6.4
Inspection Summary Guide 8.1

L

Layout
    Bilge 4.10,4.11,4.12
    Bilge Component Board 6.7
    Cabin 2.7
    Deck 2.6
    Helm, Gauges & Switches 2.8
    Lighting 6.10
    Passenger Locations 2.3
Lifesaving Equipment 1.4
Lifting 2.1
Lights
    Exterior 6.10
    Interior 6.11
    Underwater Lighting 7.12
Lights, Navigation and Anchor 2.17
Load Capacity 1.6

M

Macerator.*See* Waste Water System
Maintenance, Summary Guide 8.1
Maintenance Log 8.14

N

Nautical Terms 1.15

O

OEM i
Oil Pressure .....
    2.16.*See also* Layout: Helm, Gauge & Switches
Owner's Manual Packet i

P

Personal Flotation Devices (PFDs) 1.2,1.4,3.3
Power Capacity 1.6
Power Trim 2.15
Propellers 1.7,4.5
    Removal and Installation 4.5
Propulsion System 2.4

R

Recommended Equipment 1.5
Refrigerator 7.11
Requirements
    International Requirements 1.13
    Required Equipment 1.2

S

Safety Labels 1.1
Safe boating 1.1
Seacocks & Strainers 4.8
Seacock Interlock.*See* Waste Water System
Service, Summary Guide 8.1
Service Information 8.3
Shore Power 6.13
Skiing 1.10
SmartCraft™ 2.16
Spot Light 7.12
Stability 1.7
Stains 9.2
Steering System 3.6
Stern Drive ..... 2.4,4.3.*See also* Engine
Storage 2.1
Sump Pump 7.4
Swimming 1.9
Symbols 1.16
System Tach 2.16

T

Tachometer.....
2.16.*See also* Layout: Helm, Gauge & Switches
Transom Shower.....7.5
Trim Tabs 2.15

U

U.S. Coast Guard (USCG).....1.13
Underwater Lighting 7.12
Upholstery 9.4

V

VacuFlush® Head.....7.7
Visual Distress Signals.....1.2

W

Warning Label Locations.....1.17
Warranties .....iv,vi
Waste Disposal.....1.14
Waste Water System
Macerator 7.8
Water Heater 7.6
Water Pump.....7.3
Water Sports.....1.9
Water System 7.2,8.6
Sanitizing.....7.3
Winterizing 7.4
Water Temperature .....
2.16.*See also* Layout: Helm, Gauge & Switches
Weather 1.8
Winterizing.....7.4,8.5

Z

Zinc Anodes.....6.15

THIS PAGE LEFT INTENTIONALLY BLANK