Sea Ray

Owner's Manual

350 Sundancer

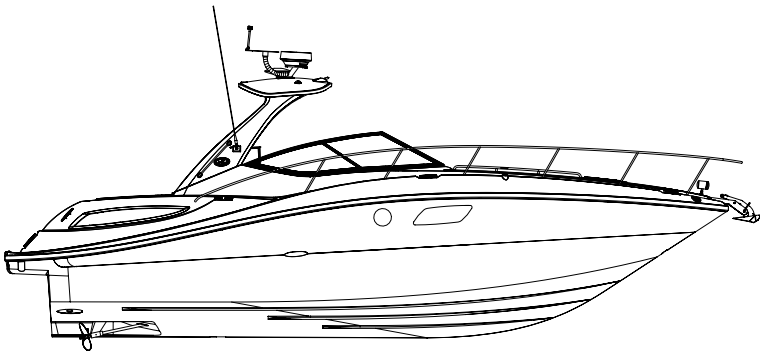

Manual Part Number: MRP 2029343

WELCOME

Congratulations on becoming the new owner of a Sea Ray® Boat, the world's most prestigious manufacturer of boats. We welcome you into our worldwide and ever-expanding family of boating enthusiasts.

This Owner's Information Packet, should be kept on board your Sea Ray®, and will provide important information about features of your boat.

For years of trouble-free boating, take the time to carefully review the information in this package and really get to know your boat. **Have everyone who will operate your boat read the Owner's Manual.**

The Owner's Information Packet contains the following:

- **Sea Ray® Owner's Manual**

The Sea Ray Owner's Manual contains important operating and safety information, as well as reminding you about your responsibilities as a boat owner/operator.

- **Model Specific Owner's Manual**

The Model Specific manual contains information specific to your model.

- **Original Equipment Manufacturer (OEM) Information**

The OEM Information of your Owner's Information Packet contains information provided by the individual systems manufacturers of equipment installed on your boat. Examples include the engine, engine control and electronics equipment. Throughout the Owner's Manual you will be referred to information provided by manufacturers of specific systems.

For a complete library of all Sea Ray manuals including owners, systems, accessories, and options please visit www.searay.com. There you will be able to view all Sea Ray manuals and any items that are not included in this manual.

Because your purchase represents a substantial investment, we know you will want to take the necessary measures to protect its value. We have outlined a program for proper operation, periodic maintenance and safety inspections. We urge you to follow these recommendations. If you have questions which are not fully covered by the Owner's Information Package, please consult your authorized Sea Ray® Boats dealer for assistance.

Thank You For Selecting A Sea Ray®!
Bon Voyage

Information in this publication is based upon the latest product specifications available at printing. Sea Ray® Boats, Inc. reserves the right to make changes at any time, without notice, in the colors, equipment, specifications, materials and prices of all models, or to discontinue models. Should changes in production models be made, Sea Ray® is not obligated to make similar changes or modifications to models sold prior to the date of such changes.

Printed in the U.S.A. August 2010
© Sea Ray Boats, Inc. • A Brunswick Company

Sea Ray Boats, Inc. 2600 Sea Ray Blvd., Knoxville, TN 37914
Please visit www.searay.com for a complete library of all Sea Ray Owner's and Accessory Manuals.

Note: Not all accessories shown in pictures or described herein are
standard equipment or even available as options.
Options and features are subject to change without notice.

The following are registered trademarks of the Brunswick Corporation: Sea Ray® & The SR Wave Logo

Table of Contents

Introduction v

1. This Manual v
2. Your Responsibilities v
3. Sources of Information v
4. Dealer Responsibilities vi
5. Warranties vi
6. Hull Identification Number (HIN) vi
7. Manufacturer's Certification vii
8. Service, Parts and Repair for Your Boat vii
9. Warranty Information vii

350 Sundancer® Owners Manual 1

1. Load Capacity 1
2. Passenger Locations 1
3. Safety Label Locations 2
4. Basic Boat Dimensions and Clearances 6
5. Function and Location of Through-Hull Cutouts 7
6. Helm, Gauge & Switch Layout 9
7. General Layout 11
8. Cleats 13
9. Navigation and Anchor Lights 13
10. Bilge Layout 14
11. Fire Extinguishing System 17
12. Fuel System 17
13. Water System 17
14. Entertainment System 19
15. Canvas 19
16. Electrical Schematics 19

Index I

This publication does not contain component or accessory manuals. Please visit www.searay.com for a complete library of all Sea Ray Owner's and Accessory Manuals

Introduction

1. This Manual

The material here and in the rest of the Owner's Information Packet:

- Gives you basic safety information;
- Describes the fundamentals of boat use;
- Describes the features of your boat;
- Describes the equipment on your boat;
- Contains service and maintenance information.

You must learn to safely operate this boat as well as read, understand and use the information contained in this package.

What these manuals do not give you is a course in boating safety, or how to navigate, anchor, or dock your boat. Operating a power boat safely requires more skills, knowledge, and awareness than is necessary for a car or truck.

2. Your Responsibilities

For your safety, the safety of your passengers, other boaters and people in the water, you must:

- Take a boating safety course;
- Get instruction in the safe and proper handling of your boat;
- Understand and follow the "Rules of the Road";
- Learn how to navigate;
- Register:

  You must register this boat in the state where it will be used most frequently, many states require additional registration when an out-of-state boat is used within their boundaries.

  Contact state boating authorities or any marine dealer for registration requirements.

3. Sources of Information

In North America, contact one of the following for boating courses:

- U.S. Coast Guard Auxiliary
- U.S. Power Squadron
- Canadian Power and Sail Squadrons
- Red Cross
- State Boating Offices
- Yacht Club

Contact your dealer or the Boat/U.S. Foundation at:

1-800-336-2628

Outside of North America, contact your boat dealer and/or your governmental boating agency for assistance.

A book that provides a comprehensive background in boating is **Chapman - *Piloting, Seamanship and Small Boat Handling***, by Elbert S. Maloney, published by Hearst Marine.

4. Dealer Responsibilities

In addition to a predelivery check and service of the boat, your dealer is to give you:

- A description and demonstration of the safety systems, features, instruments and controls on your boat;
- An orientation in the general operation of your boat;
- An "In Service Check List" form completed by you and the dealer after your inspection of the boat;
- A review of all warranty information and how to obtain warranty service;
- The Owner Information Package.

If you do not receive all of these materials, or have any questions, contact your dealer.

5. Warranties

Your boat comes with several warranties. Each component and/or system on your boat has its own warranty that will be found with the specific information and manual for that component. These are included with your Owner's Manual Packet. The Sea Ray® Express Limited Warranty is on the warranty information sheet and in this manual. Please locate and read the individual warranties.

6. Hull Identification Number (HIN)

The "Hull Identification Number", (Fig. ix.1) will be located either on the starboard side of the transom, or on the aft, starboard side of the gunwale, and is your boat's most important identifying factor. This number must be included in all correspondence and orders. Failure to include it creates delays. Also of vital importance is the engine serial number and part number when writing about or ordering parts for your engine. Refer to the Engine Operator's Manual for location of engine serial number and record it for future reference.

Hull Identification Number Location (Fig. vi.1)

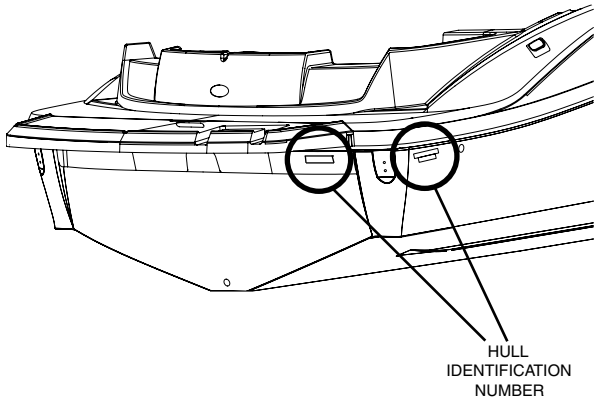

7. Manufacturer's Certification

As a boat manufacturer, Sea Ray® builds their products to guidelines established under the Federal Boat Safety Act of 1971. The Act is promulgated by the United States Coast Guard who has authority to enforce these laws on boat manufacturers that sell products in the United States. Sea Ray® ensures that all of its products comply with these laws.

The National Marine Manufacturers Association (NMMA) provides Sea Ray® with a third party certification. The NMMA is an organization that represents the marine industry and assists manufacturers, boat dealers, marinas, repair yards and component suppliers in areas of legislation, environmental concerns, marine business growth and state and federal government agency interaction. The third party certification that Sea Ray® participates in, uses the well known Standards and Recommended Practices of the American Boat and Yacht Council (ABYC).

Sea Ray® Boats participates extensively in the American Boat and Yacht Council which is a nonprofit organization that develops and publishes voluntary standards and recommended practices for boat and equipment design, construction, service and repair. We utilize all applicable ABYC standards in the construction of your Sea Ray® boat.

Finally, Sea Ray® sells their products world wide and as such must conform to the various rules and regulations required by other countries. Most notably, are the ISO standards in Europe which require the application of the Common European (CE) mark. This mark, much like the NMMA certification here in the US, gives you the boat owner specific information concerning your craft.

8. Service, Parts and Repair for Your Boat

When your boat needs service, parts or repair, take it to an authorized Sea Ray® dealer. To find a dealer in your area contact Sea Ray® via the internet at www.searay.com (international customers please visit international.searay.com).

To find repair and parts facilities for the equipment installed on your boat, refer to the section or manual for that component.

If a problem is not handled to your satisfaction:

1. Discuss any warranty-related problems directly with the service manager of the dealership or your sales person. Give the dealer an opportunity to help the service department resolve the matter for you.
2. If a problem arises that has not been resolved to your satisfaction by your dealer, contact Sea Ray® via the internet at www.searay.com and the appropriate customer service information will be provided to you.

9. Warranty Information

You will find information regarding the Sea Ray® warranty following the introduction. A warranty information card is also included in the owner information packet. If for some reason this information missing, contact your Sea Ray® dealer.

About Your Limited Warranty

Sea Ray® offers an express Limited Warranty on each new Sea Ray® purchased through an authorized Sea Ray® dealer. A copy of the Limited Warranty was included in your owner's manual package. If for any reason, you did not receive a copy of the Limited Warranty, please contact your local dealer for a replacement copy. This is a summary of several provisions of the Limited Warranty. Please read the Limited Warranty, which is the controlling document.

Under the Limited Warranty, Sea Ray® covers: (a) structural fiberglass deck or hull defects which occur within five (5) years of the date of delivery; (b) parts founds to be defective in factory material or workmanship within one (1) year of the date of delivery; (c) laminate blisters resulting from defects in factory material or workmanship for five (5) years on a prorated basis.

Sea Ray®'s obligation under the Limited Warranty is limited to repair or replacement of parts that are judged defective by Sea Ray® and does not include transportation, haul out, or other expenses. The foregoing is the **sole and exclusive** remedy provided by Sea Ray®.

The Limited Warranty does not cover engines, stern drives, controls, propellers, batteries, trailers, or other equipment or accessories carrying their own individual warranties, nor does the Limited Warranty cover engines, parts or accessories not installed by Sea Ray®. The Limited Warranty does not cover cosmetic gel coat finish. Boats used for commercial purpose are excluded from coverage. **See the Sea Ray® Limited Warranty for other exclusions.**

SEA RAY® EXPRESSLY DISCLAIMS THE IMPLIED WARRANTIES OF MERCHANTABILITY AND FITNESS. NEITHER SEA RAY® NOR THE SELLING DEALER SHALL HAVE ANY RESPONSIBILITY FOR LOSS OF USE OF THE BOAT, LOSS OF TIME, INCONVENIENCE, COMMERCIAL LOSS OR CONSEQUENTIAL DAMAGES.

The unexpired term of the limited warranty may be transferred to a subsequent owner upon the new owner's request, except this limited warranty will not transfer to any subsequent owner of a boat which has been salvaged or resold after declaration of a total loss or a constructive total loss, i.e., the cost of repair exceeds the value of the boat. The new owner can submit this request, free of charge, via the searay.com website or through a local authorized Sea Ray Dealer where processing fees may be applied. Sea Ray reserves the right to reject any warranty transfer request for a boat that has been damaged, neglected, or otherwise previously excluded from warranty..

Thank you for your decision to buy a Sea Ray®.

The Sea Ray® Limited Warranty is subject to change at any time at Sea Ray's discretion. The information contained herein is general information about the Limited Warranty for the owner's general knowledge, but does not alter or amend the terms of the Limited Warranty.

1. LOAD CAPACITY

Refer to the General Information Sections for a detailed explanation of load capacity.

⚠ DANGER

Never carry more weight or passengers than indicated on the certification plate, regardless of weather or water conditions.

The boat can capsize, swamp or sink.

2. PASSENGER LOCATIONS

BUILDER'S PLATE (INTERNATIONAL)
(FIG. 1.1)

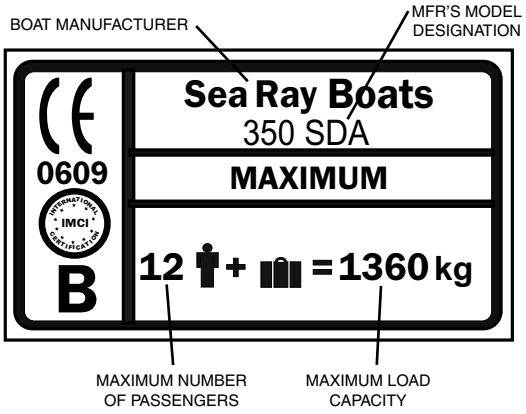

Refer to the General Information Sections for a detailed explanation of passenger locations.

⚠ WARNING

Boat motion can be erratic.

You can fall overboard or be injured by hitting something in or on the boat.

All persons must be in cockpit area or cabin and be prepared for sudden boat movement.

Use front or bow deck area only during anchoring, mooring or emergencies.

⚠ WARNING

Wet decks are slippery.

You can be seriously injured if you slip and fall.

Wear slip resistant footwear secured to your feet and hold on to rails or boat structure.

PASSENGER LOCATIONS
(FIG. 1.2)

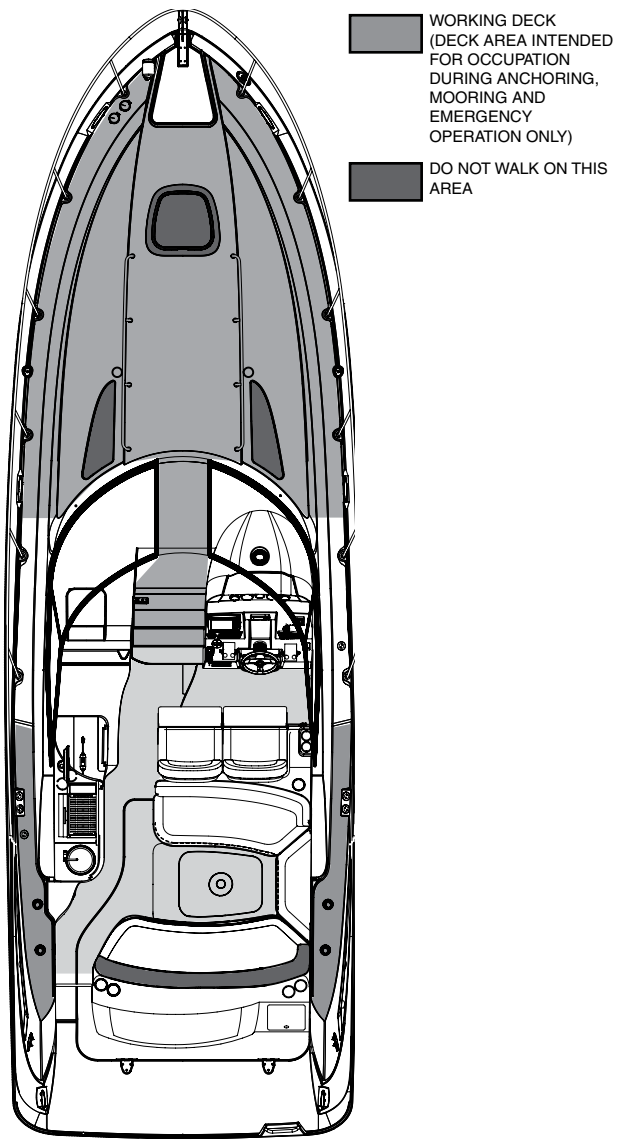

⚠ DANGER

Rotating propellers can injure or kill you.

Shut off engine when persons are in water near boat, or on swim platform or ladder

⚠ WARNING

Rear facing transom seats MUST NOT be used while engine is running or boat is underway

3. SAFETY LABEL LOCATIONS

SAFETY LABEL LOCATIONS
(FIG. 2.1)

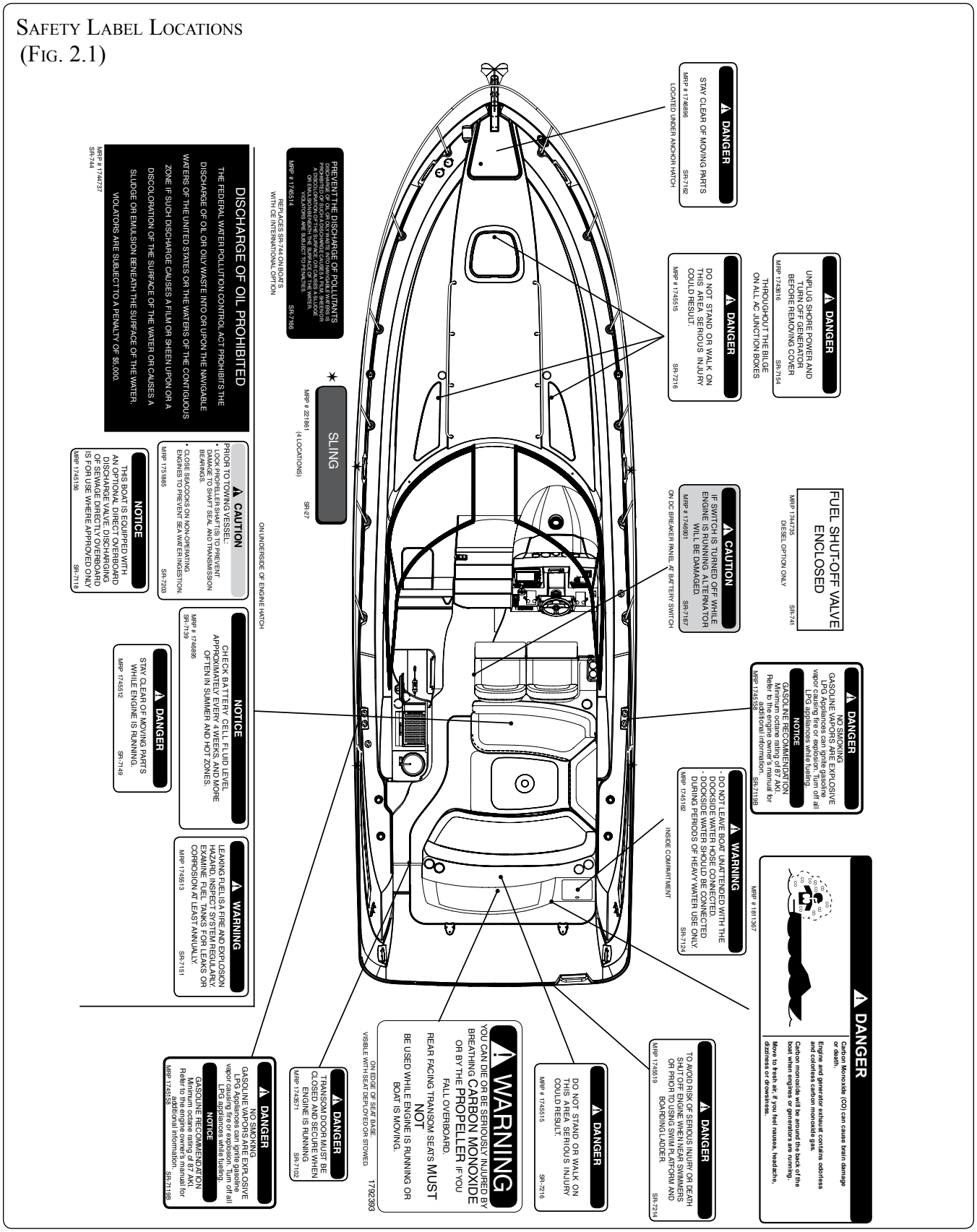

SAFETY LABEL LOCATIONS (CONTINUED)

SAFETY LABEL LOCATIONS
(FIG. 3.1)

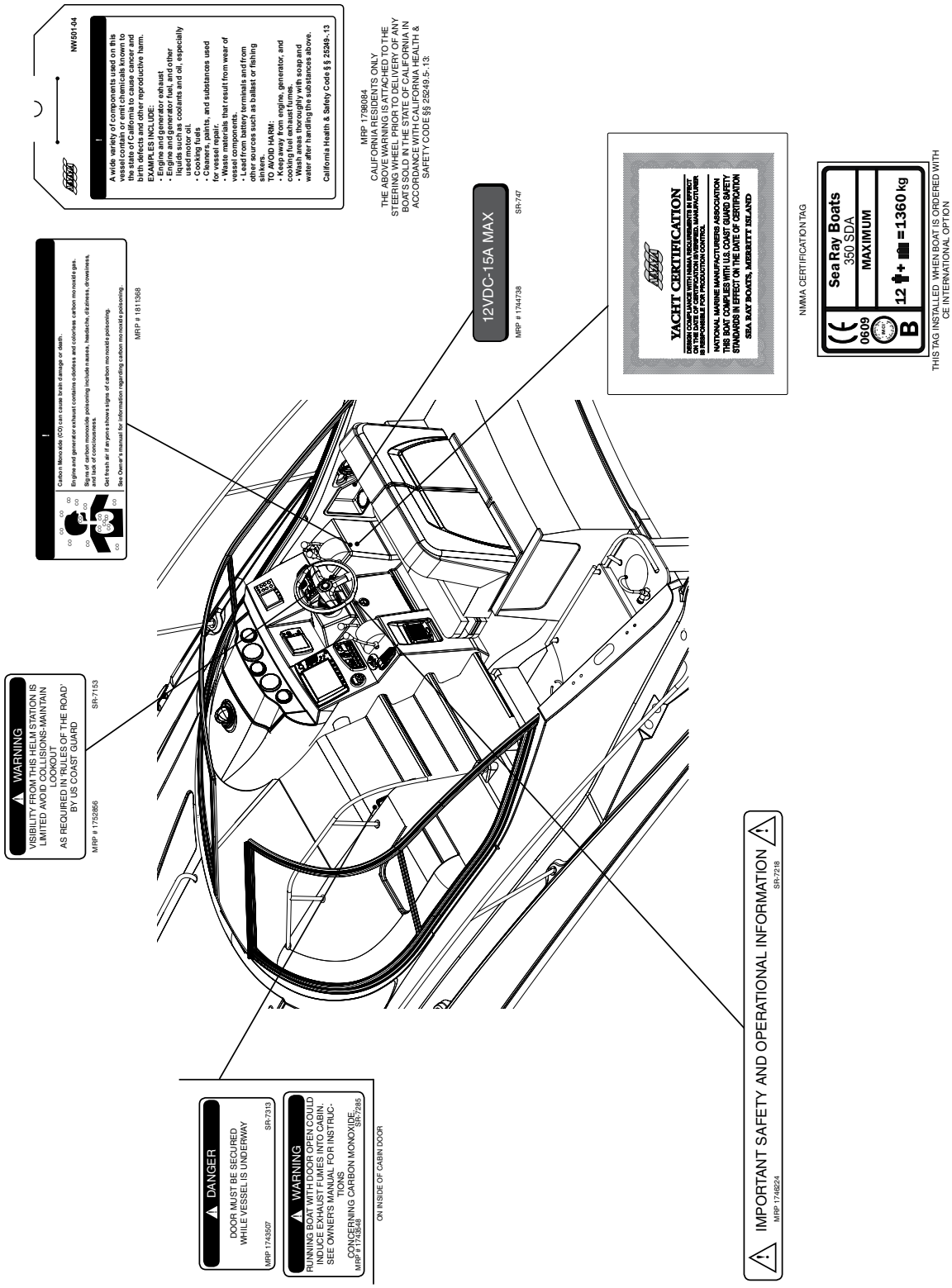

SAFETY LABEL LOCATIONS (CONTINUED)

SAFETY LABEL LOCATIONS
(FIG. 4.1)

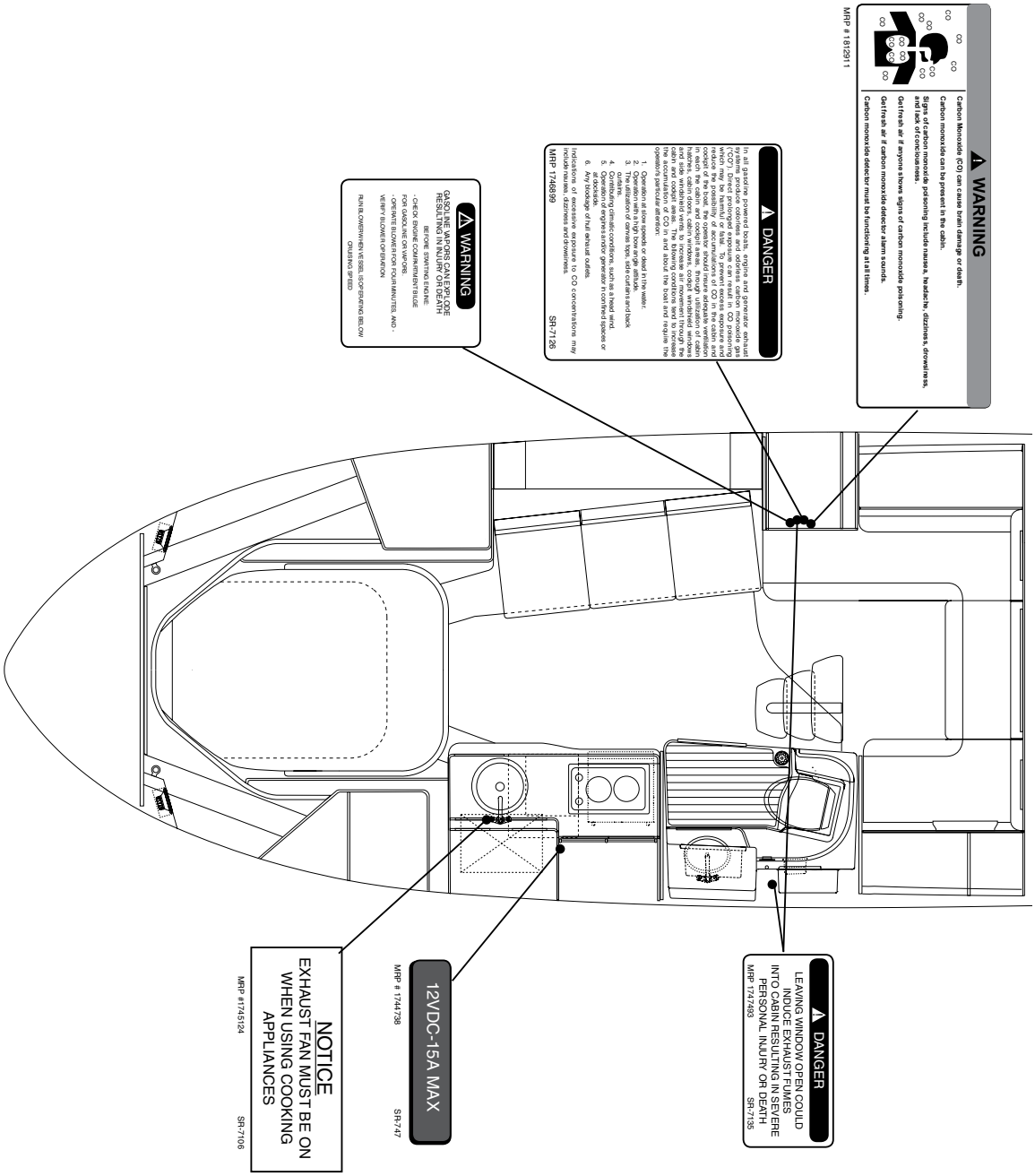

SAFETY LABEL LOCATIONS (CONTINUED)

SAFETY LABEL LOCATIONS
(FIG. 5.1)

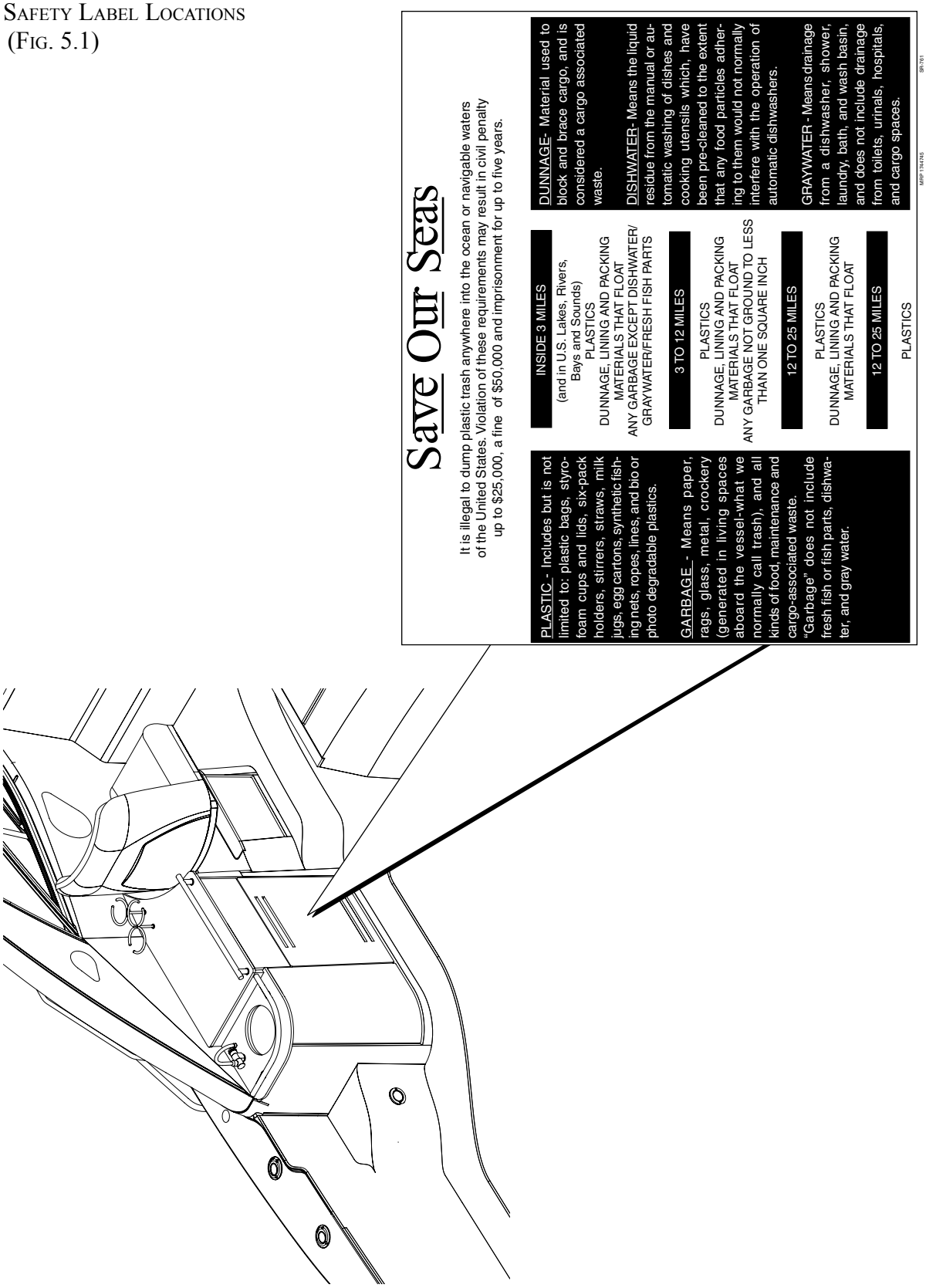

4. BASIC BOAT DIMENSIONS AND CLEARANCES

BOAT DIMENSIONS AND CLEARANCES
(FIG. 6.1)

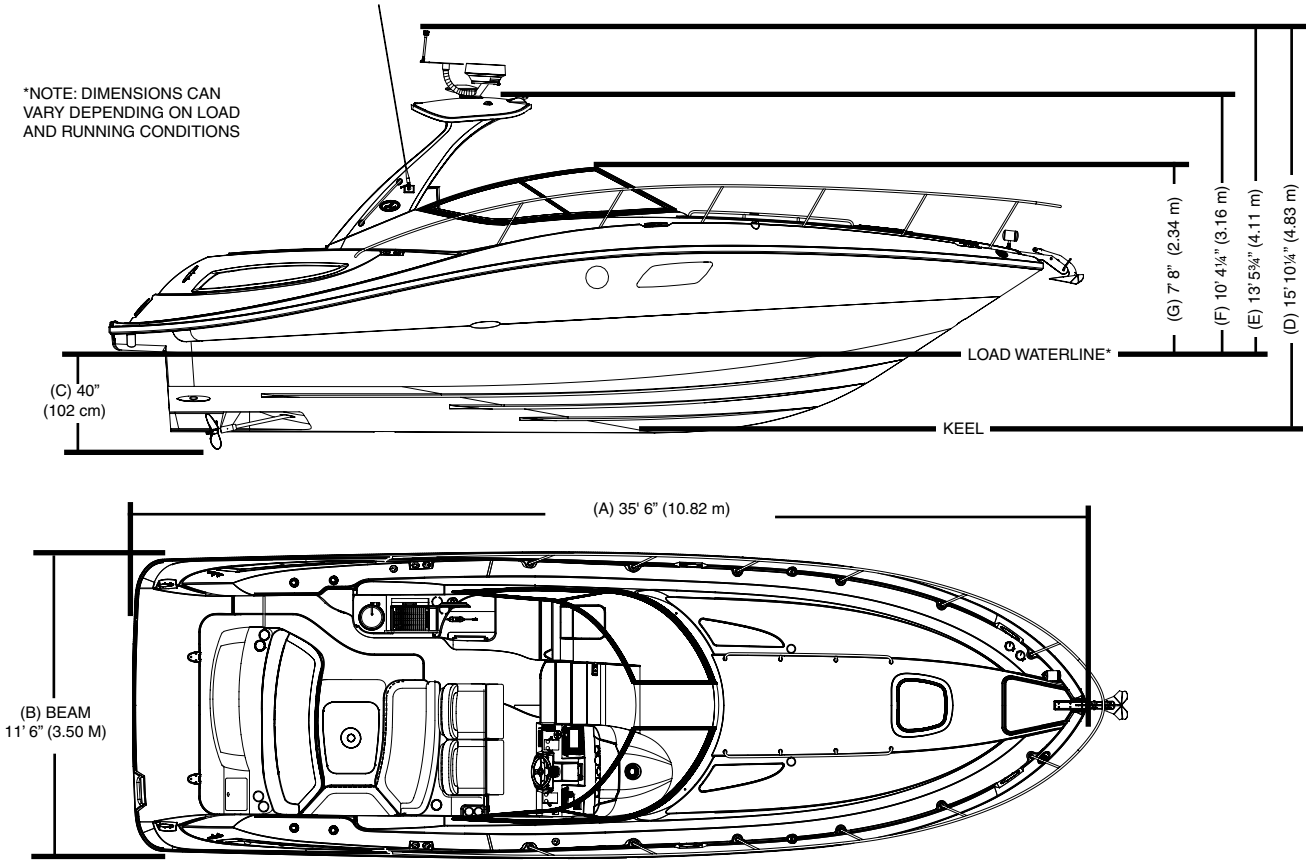

350 SUNDANCER® SPECIFICATIONS

(A) Overall Length With Std. Swim Platform	35ft. 6in.	10.82 m
(B) Beam (Width)	11ft. 6in.	3.50 m
(C) Draft (Twin Stern Drive Down)	40in.**	102 cm**
Draft (Twin Stern Drive Up)	31in.**	79 cm**
Draft (Twin V-Drive)	41in.**	104 cm**

** MINIMUM WATER DEPTH TO PREVENT RUNNING AGROUND

Dry Weight	15,400 lbs.	6,985 kg.
Fuel Capacity	225 gal.	851.7 liters
Usable Fuel	203 gal.	768 liters
Water Capacity	40 gal.	151.4 liters
Holding Tank	28 gal.	106 liters
Dead Rise	21°	

HEIGHT DIMENSIONS

(D) Keel to Top of Mast Light	15ft. 10¼in.	4.83 m
(E) Waterline to Top of Mast Light	13ft. 5¾in.	4.11 m
(F) Waterline to Top of Arch	10ft. 4¼in.	3.16 m
(G) Waterline to Top of Windshield	7ft. 8in.	2.34 m

5. FUNCTION AND LOCATION OF THROUGH-HULL CUTOUTS

STARBOARD THROUGH-HULL CUTOUTS (V-DRIVE SHOWN) (FIG. 7.1)

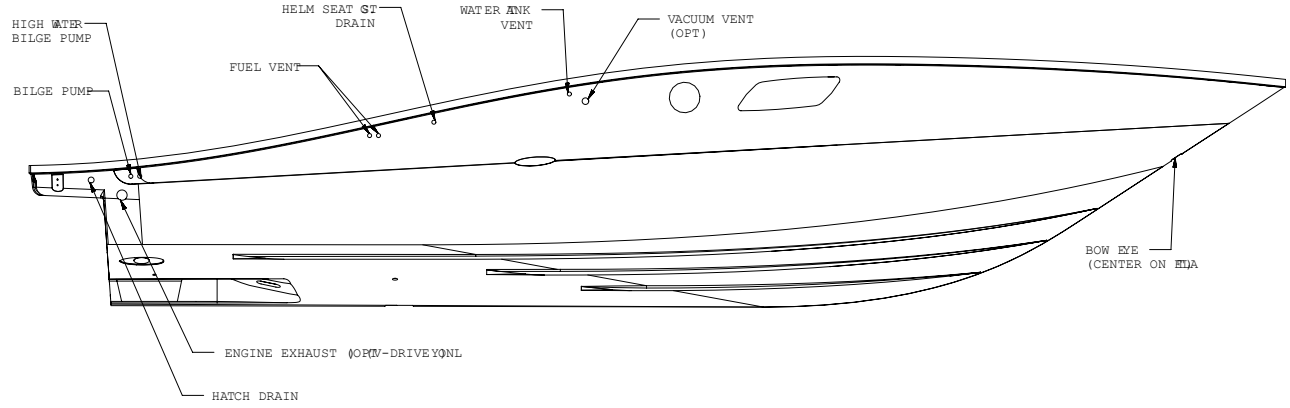

PORT THROUGH-HULL CUTOUTS (V-DRIVE SHOWN) (FIG. 7.2)

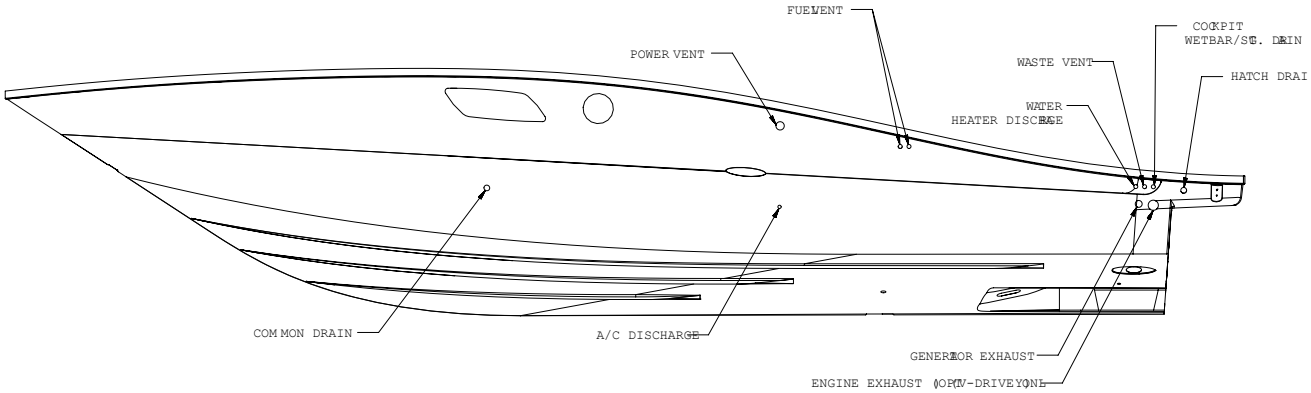

TRANSOM THROUGH-HULL CUTOUTS (V-DRIVE SHOWN) (FIG. 7.3)

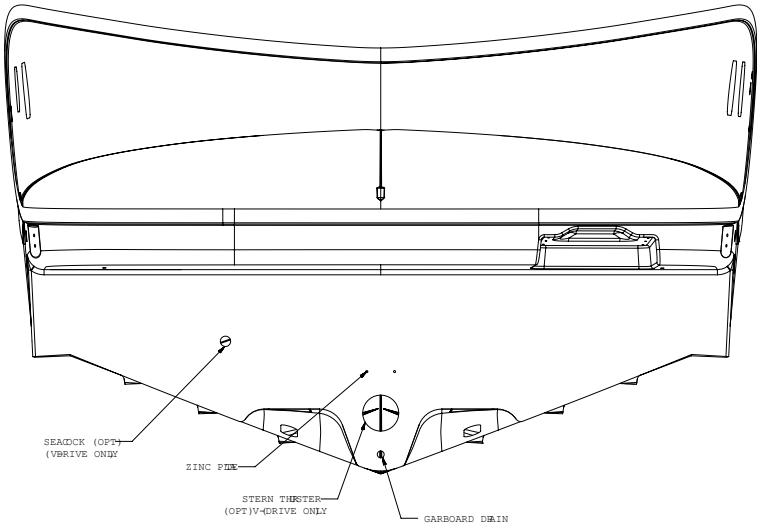

FUNCTION AND LOCATION OF THROUGH-HULL CUTOUTS (CONTINUED)

BILGE THROUGH-HULL CUTOUTS (STERN DRIVE) (FIG. 8.1)

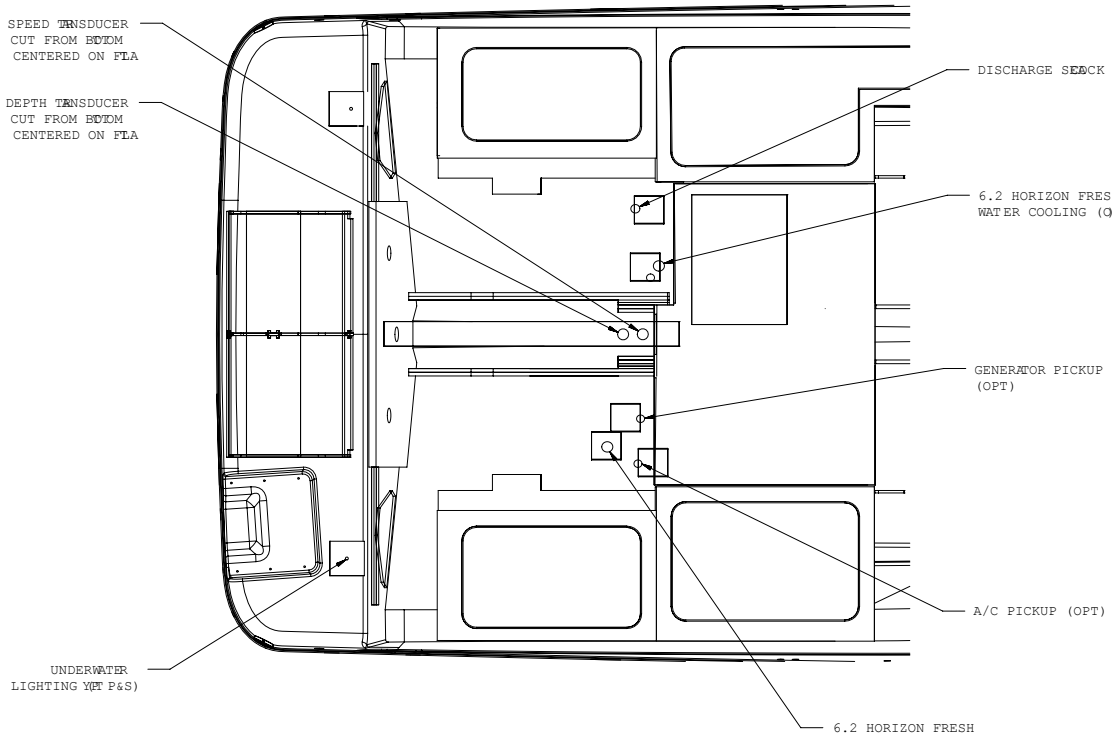

BILGE THROUGH-HULL CUTOUTS (V-DRIVE) (FIG. 8.2)

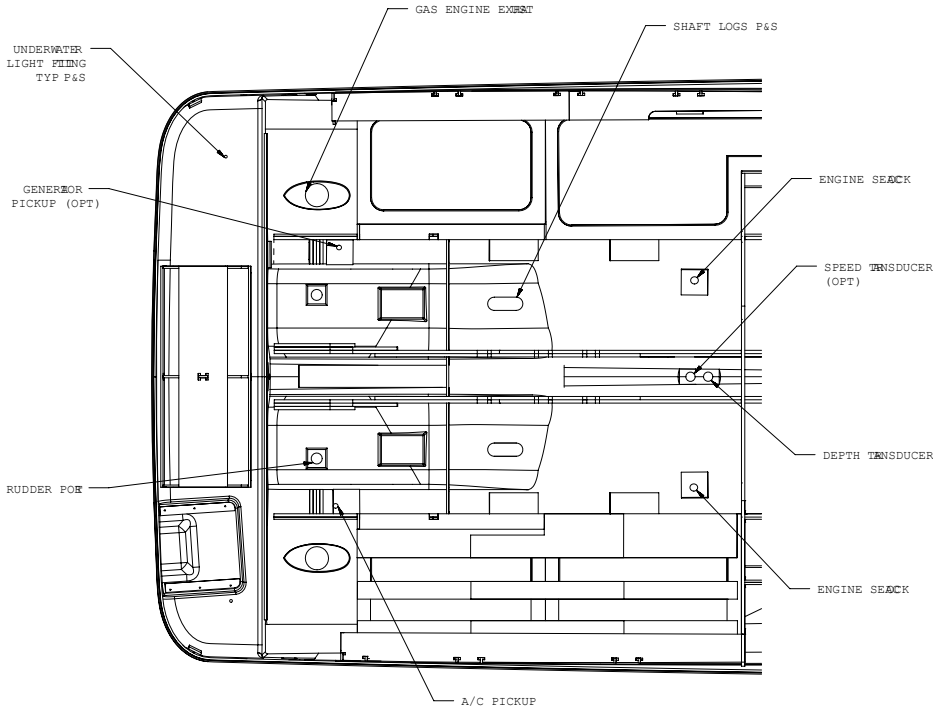

6. HELM, GAUGE & SWITCH LAYOUT

HELM LAYOUT
(FIG. 9.1)

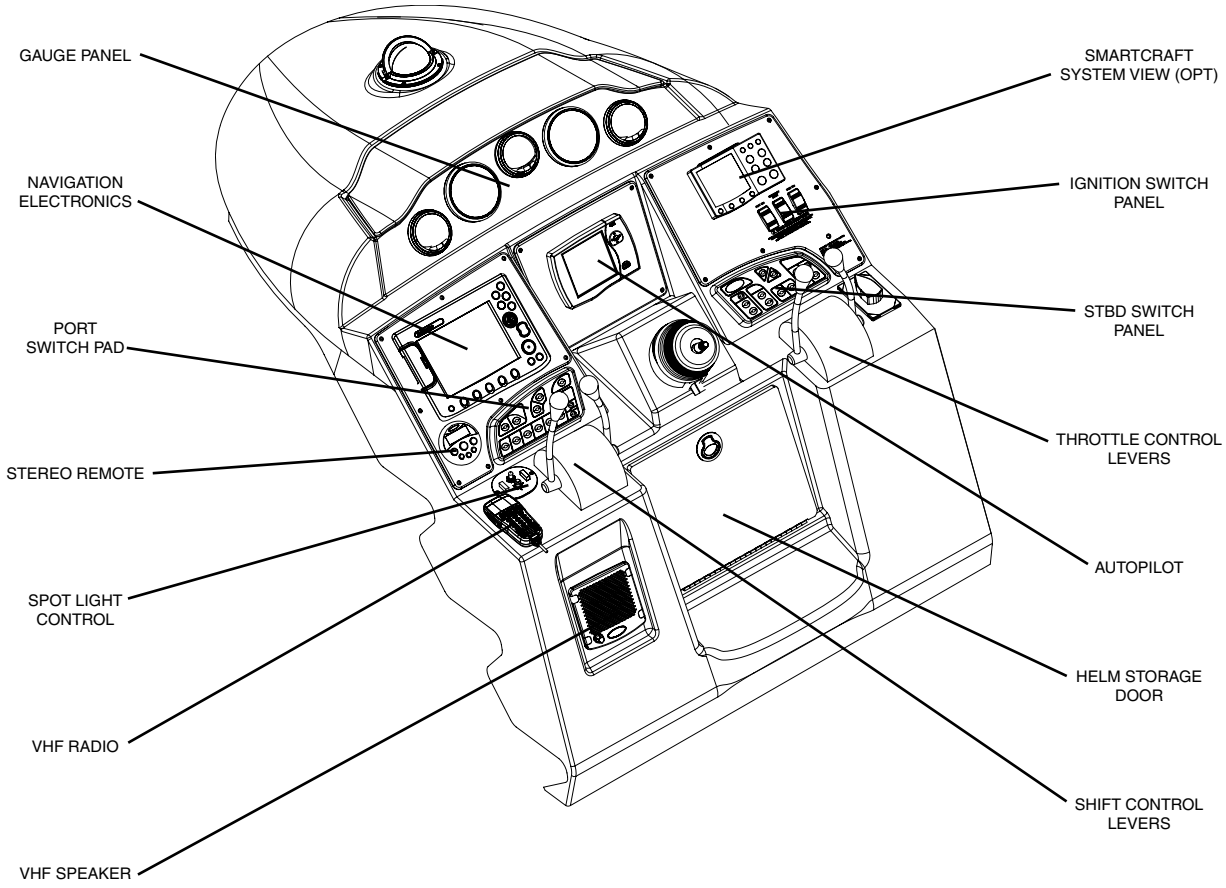

PORT/ STARBOARD SWITCH PADS
(FIG. 9.2)

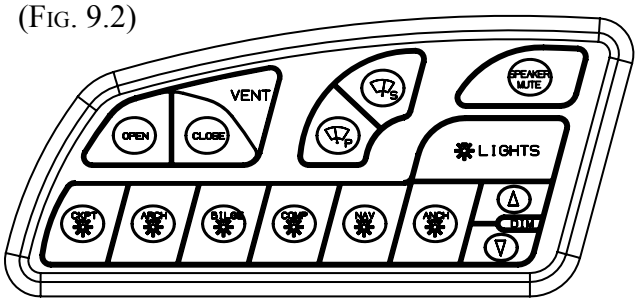

PORT SWITCH PANEL

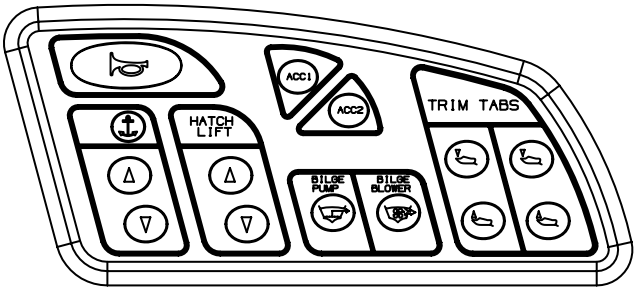

STARBOARD SWITCH PANEL

HELM, GAUGE & SWITCH LAYOUT, CONTINUED

GAUGE PANEL (GAS ENGINE)
(FIG. 10.1)

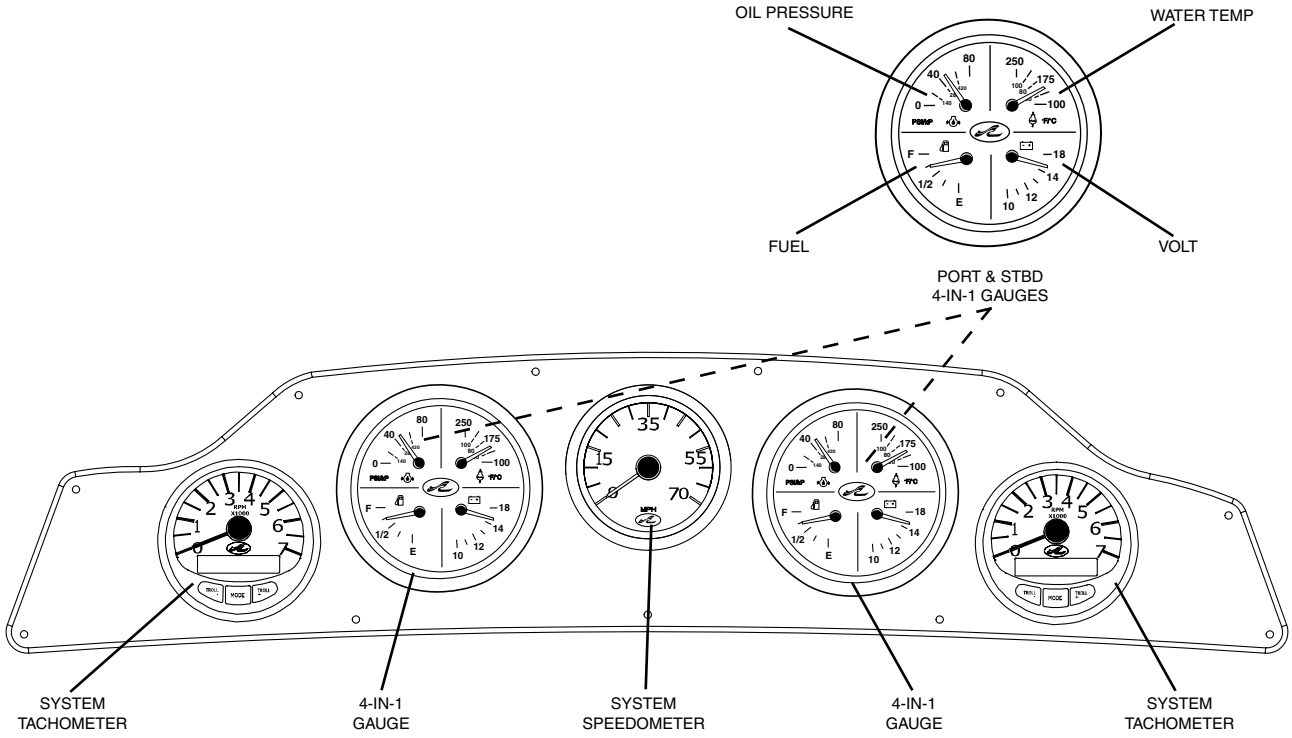

GAUGE PANEL (DIESEL ENGINE OPTION)
(FIG. 10.2)

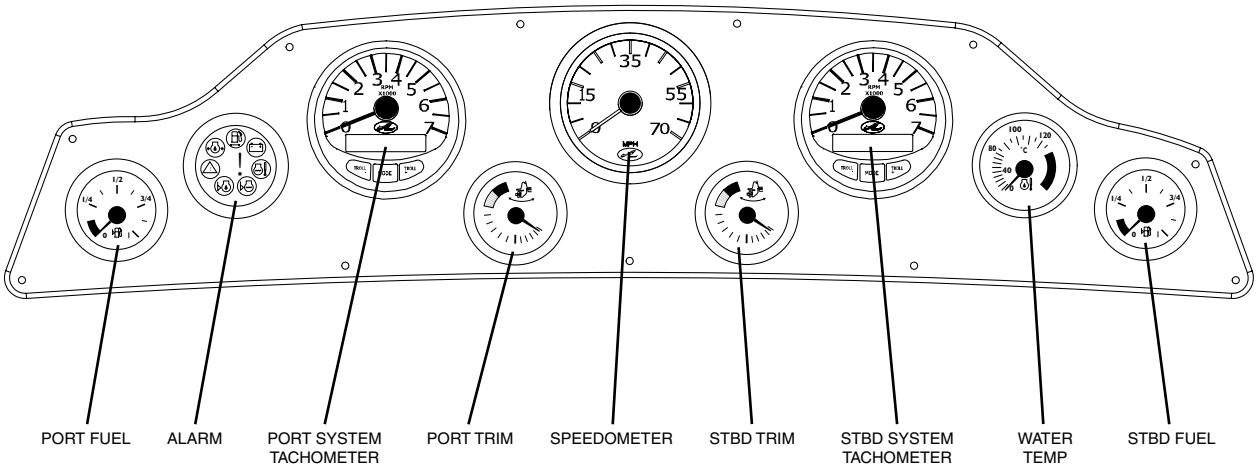

7. GENERAL LAYOUT

DECK LAYOUT
(FIG. 11.1)

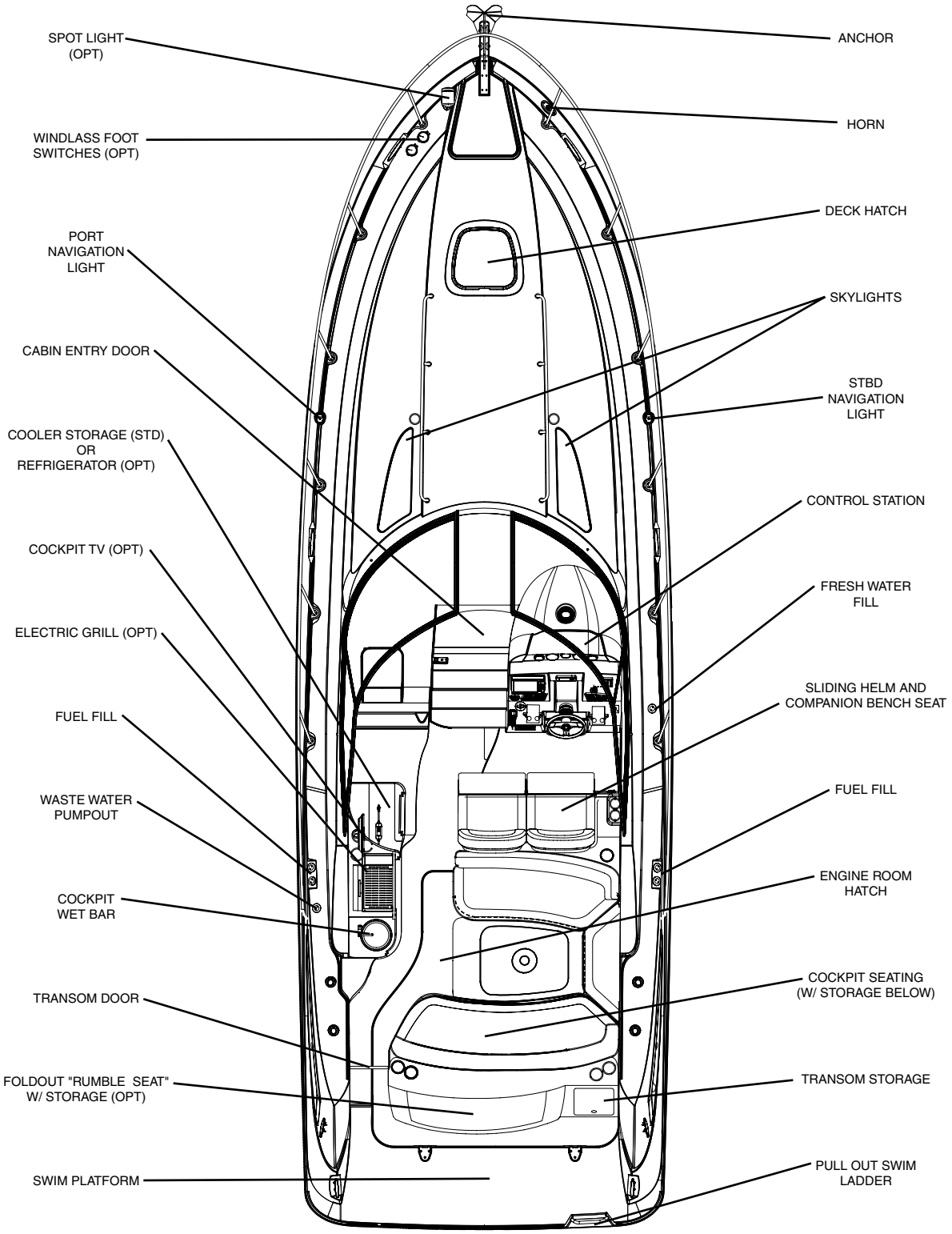

GENERAL LAYOUT, CONTINUED

CABIN LAYOUT
(FIG. 12.1)

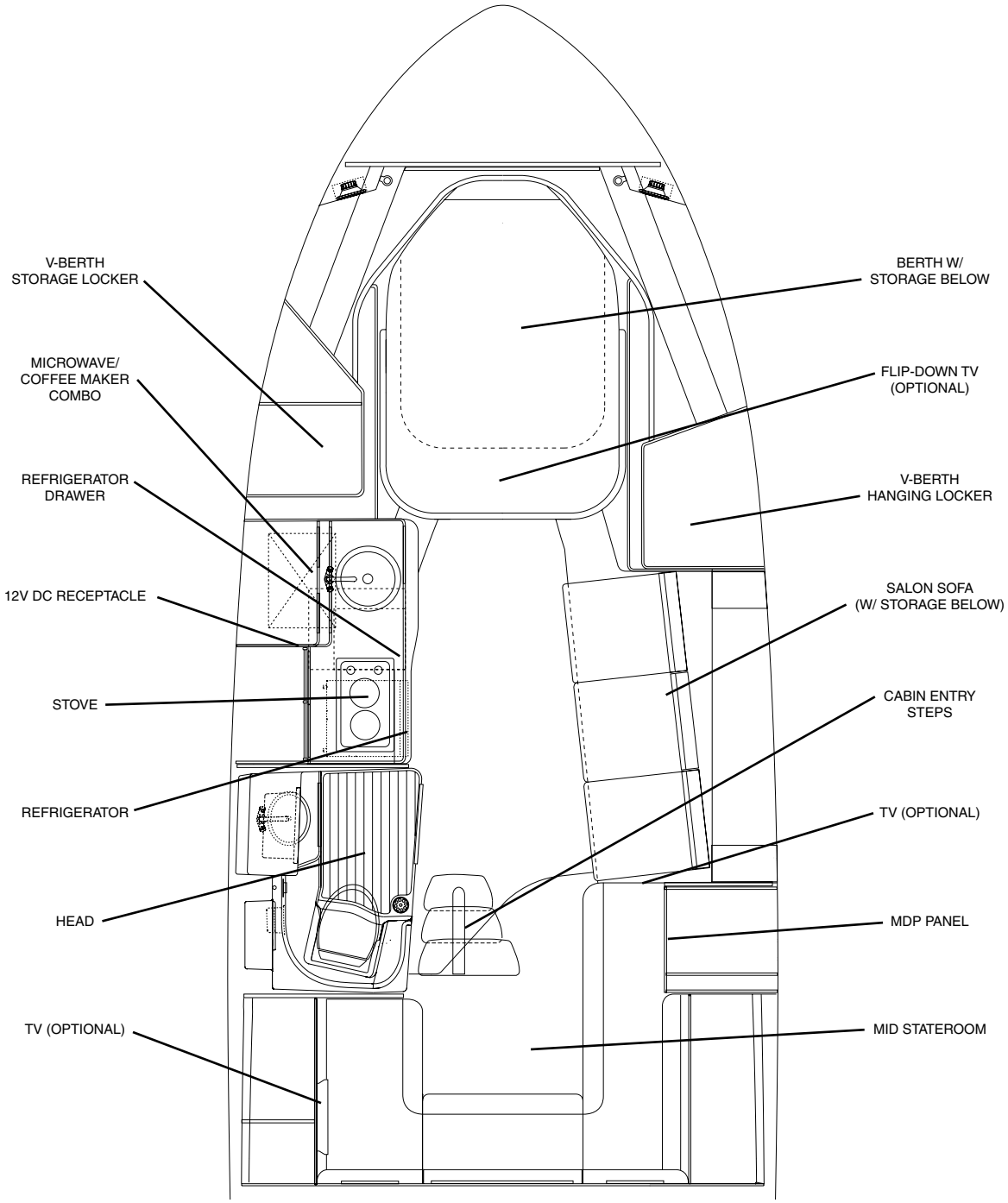

8. CLEATS

Cleats must not be used for lifting the boat; they are intended for docking or mooring use only.

CLEAT LOCATIONS
(FIG. 13.1)

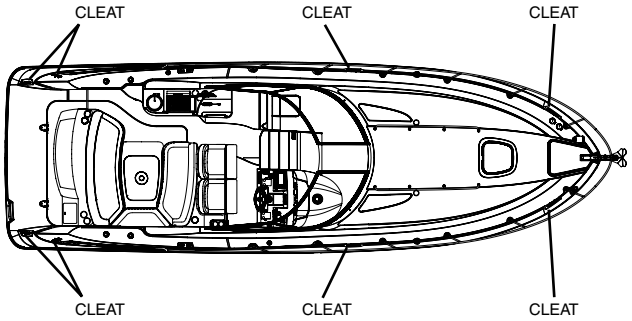

9. NAVIGATION AND ANCHOR LIGHTS

See General Information Sections for a detailed explanation of the anchor lights.

NAVIGATION AND ANCHOR LIGHTS
(FIG. 13.2)

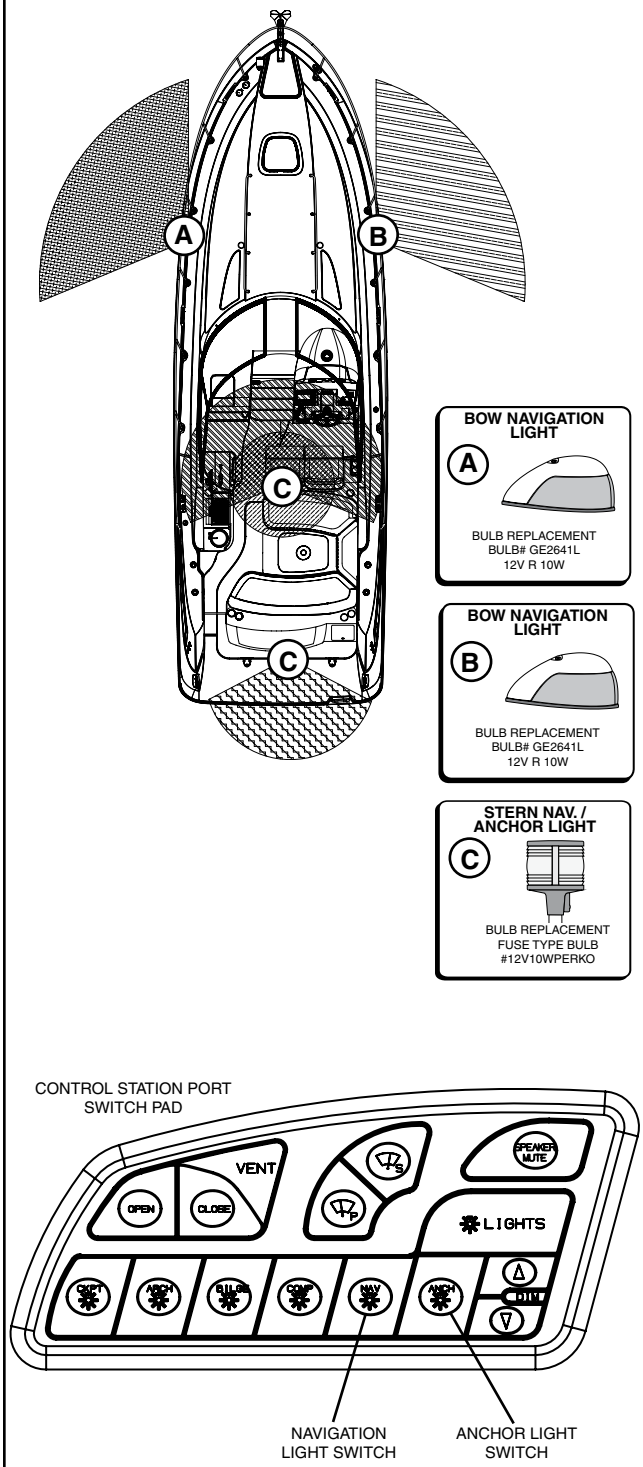

10. BILGE LAYOUT

BILGE LAYOUT (GAS STERN DRIVE ENGINES)
(FIG. 14.1)

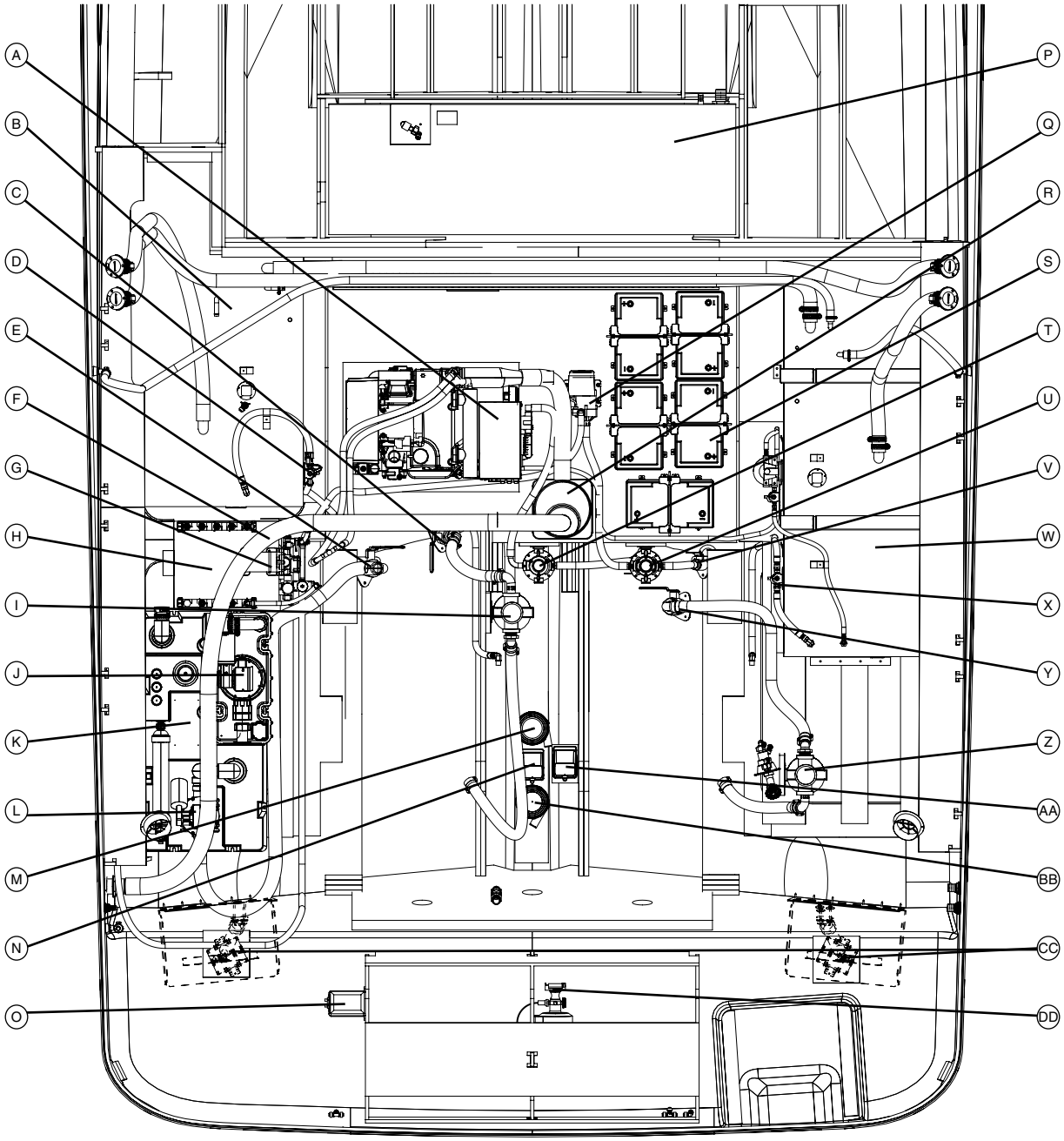

- (A) GENERATOR*
- (B) PORT FUEL TANK
- (C) PORT ENGINE RAW WATER SEACOCK*
- (D) PORT ELECTRONIC SHUT OFF VALVE
- (E) WASTE DISCHARGE SEACOCK*
- (F) GENERATOR EXHAUST*
- (G) FRESH WATER PUMP
- (H) WATER HEATER
- (I) PORT ENGINE STRAINER*
- (J) WASTE VACUUM GENERATOR
- (K) WASTE WATER HOLDING TANK
- (L) MACERATOR*
- (M) EMERGENCY HIGH WATER PUMP
- (N) BILGE FLOAT SWITCH
- (O) TRIM TABS PUMP
- (P) FRESH WATER TANK
- (Q) A/C PUMP*
- (R) GENERATOR MUFFLER*
- (S) BATTERIES
- (T) GENERATOR STRAINER*
- (U) A/C STRAINER*
- (V) A/C INTAKE SEACOCK*
- (W) STBD FUEL TANK
- (X) STBD ELECTRONIC SHUT OFF VALVE
- (Y) STBD ENGINE RAW WATER SEACOCK*
- (Z) STBD ENGINE STRAINER*
- (AA) EMERGENCY HIGH WATER FLOAT SWITCH
- (BB) BILGE PUMP
- (CC) BILGE BLOWERS
- (DD) AUTOMATIC FIRE EXTINGUISHER

*OPTIONAL EQUIPMENT

BILGE LAYOUT (CONT.)

BILGE LAYOUT (DIESEL STERN DRIVE ENGINES)
(FIG. 15.1)

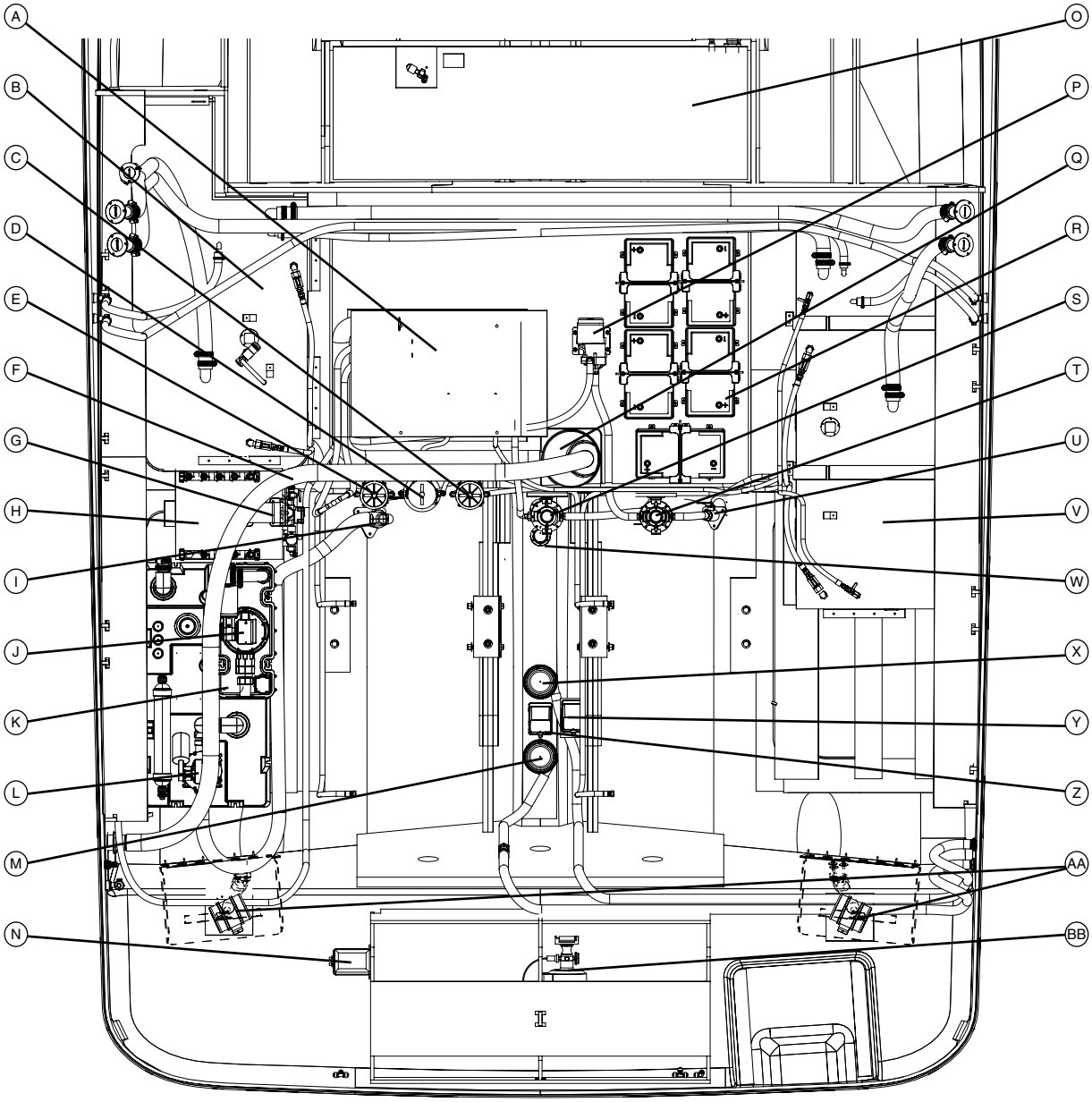

(A) GENERATOR*	(H) WATER HEATER	(O) FRESH WATER TANK	(V) STBD FUEL TANK
(B) PORT FUEL TANK	(I) WASTE DISCHARGE SEACOCK*	(P) A/C PUMP*	(W) TRANSDUCERS
(C) STBD ENGINE FUEL FILTER	(J) WASTE VACUUM GENERATOR	(Q) GENERATOR MUFFLER*	(X) EMERGENCY HIGH WATER PUMP
(D) GENERATOR FUEL FILTER*	(K) WASTE WATER HOLDING TANK	(R) BATTERIES	(Y) EMERGENCY HIGH WATER FLOAT SWITCH
(E) PORT ENGINE FUEL FILTER	(L) MACERATOR*	(S) GENERATOR STRAINER*	(Z) BILGE FLOAT SWITCH
(F) GENERATOR EXHAUST*	(M) BILGE PUMP	(T) A/C STRAINER*	(AA) BILGE BLOWERS
(G) FRESH WATER PUMP	(N) TRIM TABS PUMP	(U) A/C INTAKE SEACOCK*	(BB) AUTOMATIC FIRE EXTINGUISHER

*OPTIONAL EQUIPMENT

BILGE LAYOUT (CONT.)

BILGE LAYOUT (SINGLE DIESEL ENGINE)
(FIG. 16.1)

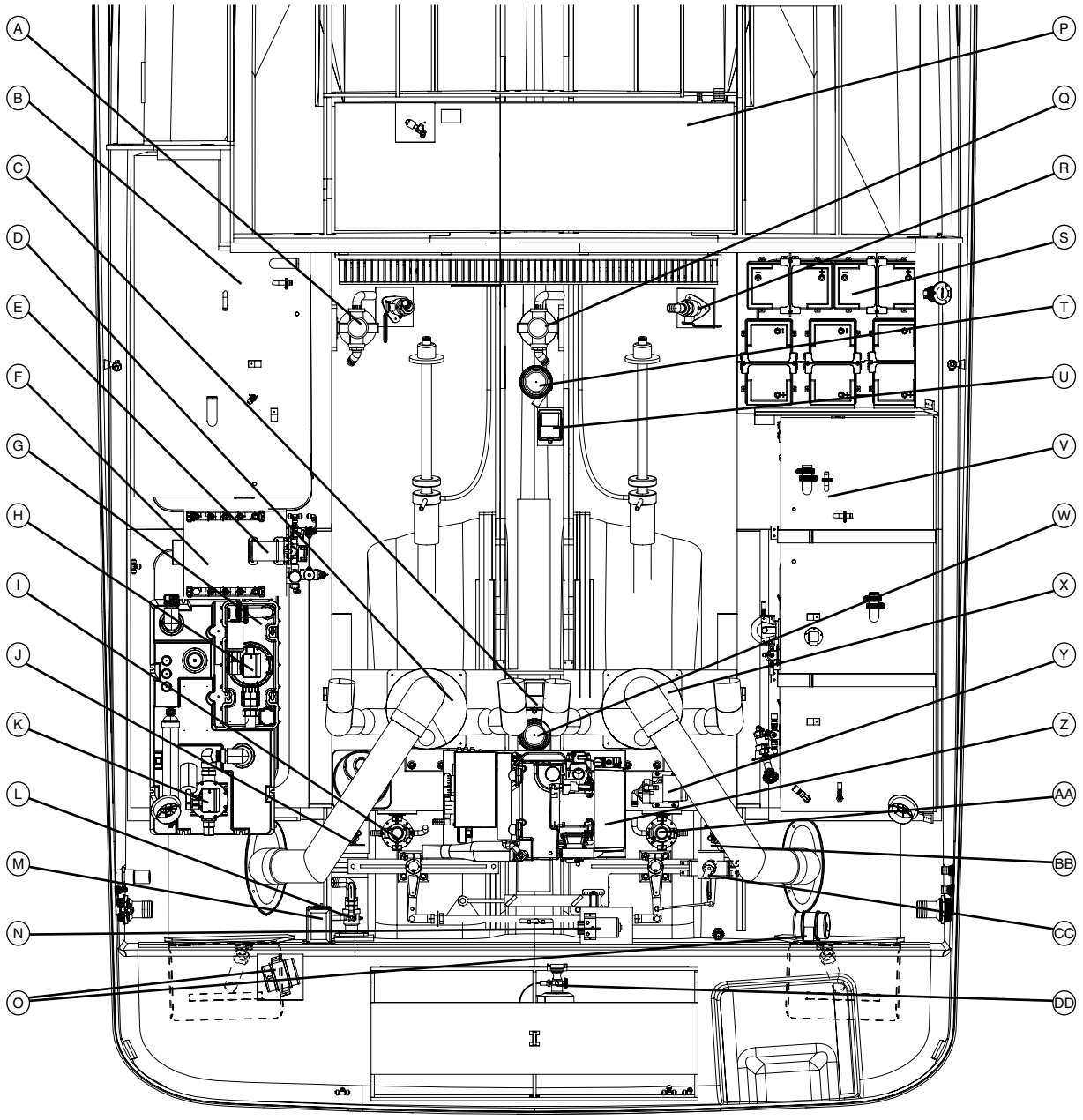

- (A) PORT ENGINE STRAINER*
- (B) PORT FUEL TANK
- (C) BILGE FLOAT SWITCH
- (D) PORT ENGINE MUFFLER
- (E) FRESH WATER PUMP
- (F) WATER HEATER
- (G) WASTE WATER HOLDING TANK
- (H) VACUUM GENERATOR
- (I) GENERATOR STRAINER*
- (J) GENERATOR INTAKE SEACOCK*
- (K) MACERATOR*
- (L) DISCHARGE SEACOCK*
- (M) TRIM TABS PUMP
- (N) AUTO PILOT PUMP*
- (O) BILGE BLOWERS
- (P) FRESH WATER TANK
- (Q) STBD ENGINE STRAINER*
- (R) STBD ENGINE RAW WATER INTAKE
- (S) BATTERIES
- (T) EMERGENCY HIGH WATER PUMP
- (U) EMERGENCY HIGH WATER FLOAT SWITCH
- (V) STBD FUEL TANK
- (W) BILGE PUMP
- (X) STBD ENGINE MUFFLER
- (Y) A/C PUMP*
- (Z) GENERATOR*
- (AA) A/C STRAINER*
- (BB) A/C INTAKE SEACOCK*
- (CC) RUDDER POSITION INDICATOR*
- (DD) AUTOMATIC FIRE EXTINGUISHER

*OPTIONAL EQUIPMENT

11. FIRE EXTINGUISHING SYSTEM

Your 350 Sundancer has an automatic fire extinguisher system installed standard. Refer to the General Information Sections for a detailed explanation of the automatic fire extinguisher system.

12. FUEL SYSTEM

A. GASOLINE FUEL SYSTEM

The standard gasoline fuel system on your 350SDA consists of a 225 gal. (852 liter) fuel tank, fuel tank vent, electronic fuel sender, anti-siphon valve, engine fuel supply line and fuel fill.

The optional twin engine gasoline fuel system uses a single tank with two electronic fuel senders, anti-siphon valves and engine fuel supply lines.

B. DIESEL FUEL SYSTEM (OPTIONAL)

The optional diesel fuel system consists of a 225 gal. (852 liter) fuel tank, fuel tank vents, engine fuel supply and return lines, fuel filter and fuel fill.

13. WATER SYSTEM

The fresh water system on the 350SDA consists of a 40 gal. (151 liter) tank. Refer to the General Information Sections for a detailed explanation of the water system.

FUEL SYSTEM (GAS STERN DRIVE - SHOWN WITH GENERATOR OPTION) (FIG. 17.1)

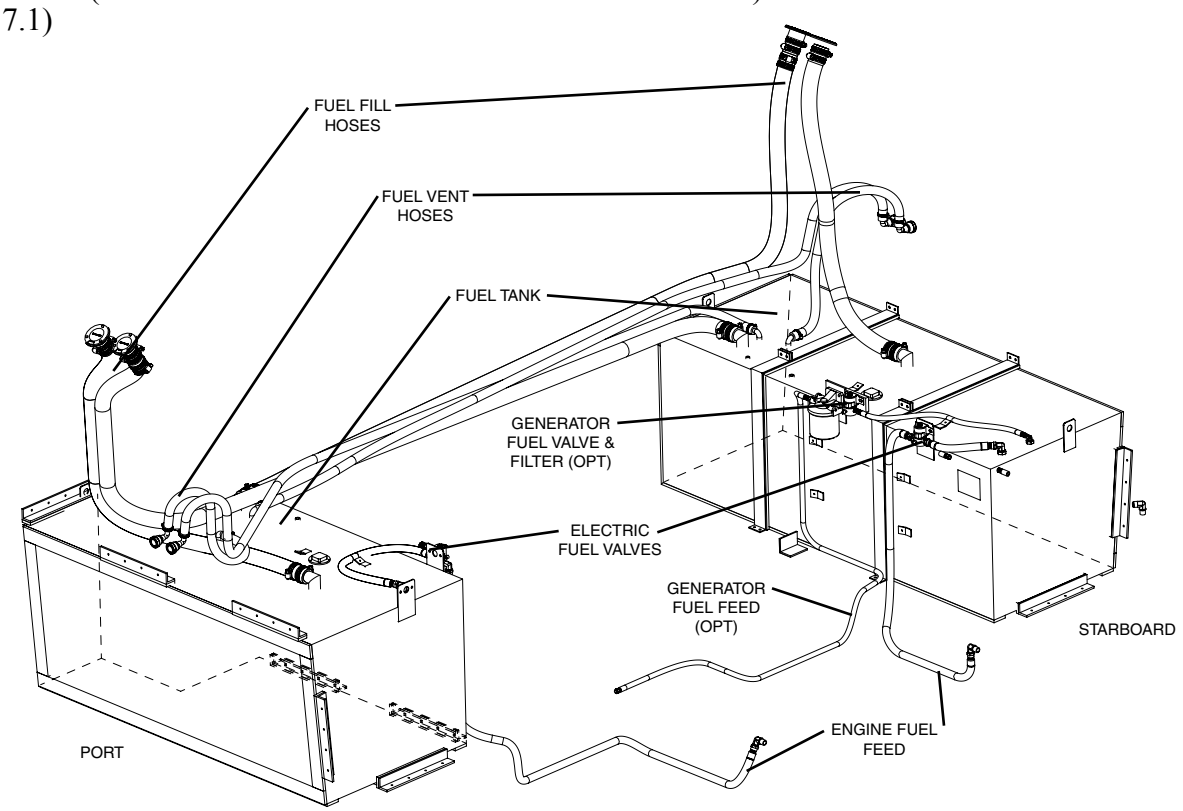

FUEL SYSTEM (DIESEL STERN DRIVE - SHOWN WITH GENERATOR OPTION)
(FIG. 18.1)

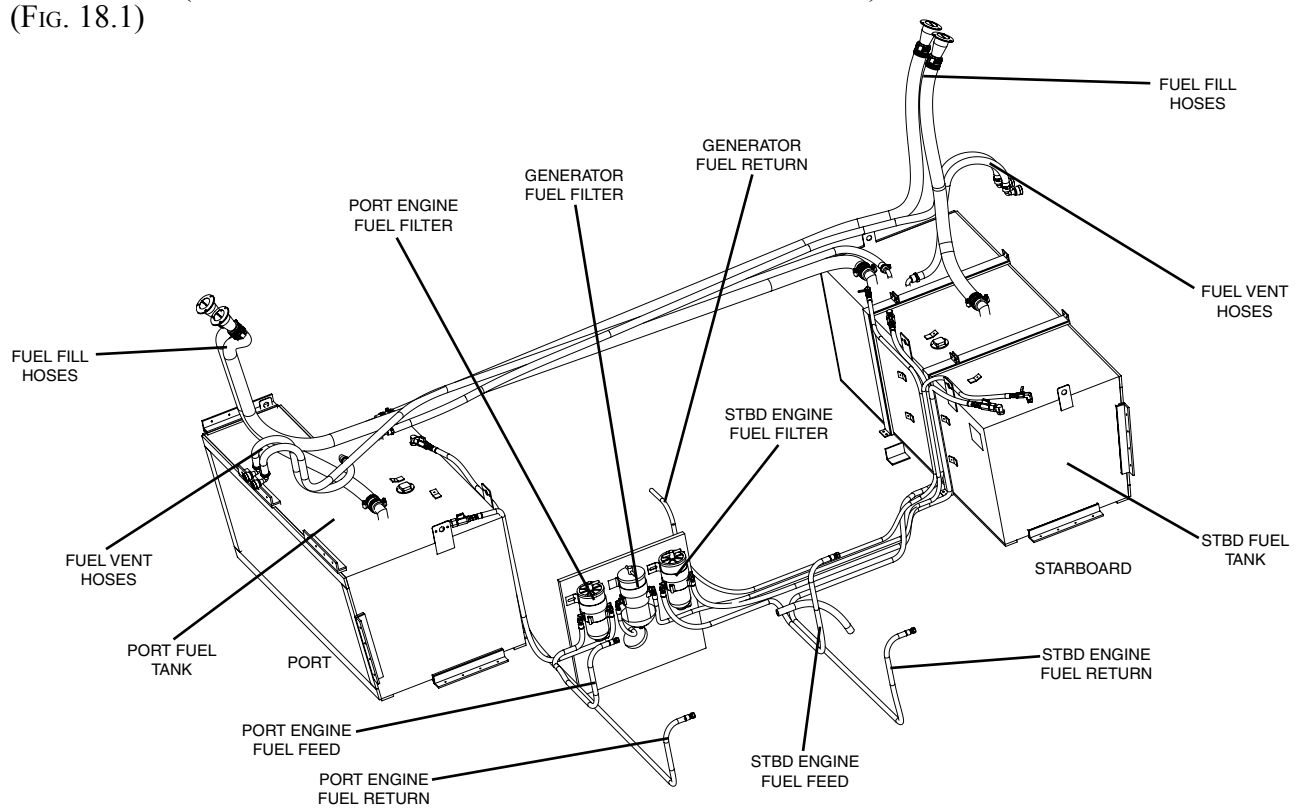

FUEL SYSTEM (GAS V-DRIVE - SHOWN WITH GENERATOR OPTION)
(FIG. 18.2)

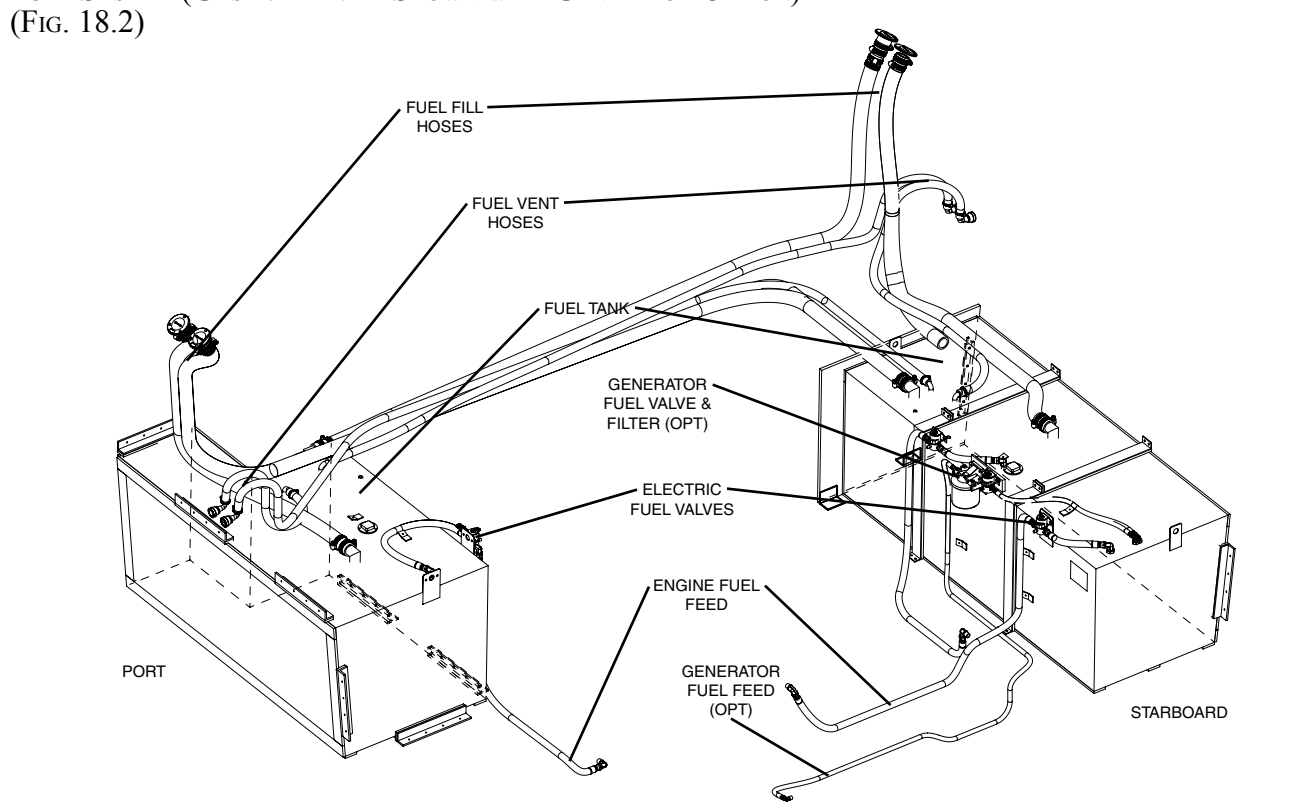

14. ENTERTAINMENT SYSTEM

The 12 volt AM/FM radio, single CD, satellite ready stereo is located in the MDP cabinet in the cabin. The system includes six (6) water proof speakers, a subwoofer, a remote MP3 device port, a digital remote control located at the control station and an optional remote on the transom.

An optional Premium Cockpit Sound System is available. It includes upgraded speakers, subwoofer, amplifier and transom stereo remote.

A. SALON ENTERTAINMENT CENTER (OPTION)

The optional salon entertainment system consists of a 15" flatscreen TV with a remote DVD player, gaming system port and dockside inlet for cable/ antenna hook-up. An additional-* 15" flatscreen TV with remote DVD player and gaming port is also available in the mid stateroom (only in addition to the Salon option).

15. CANVAS

The Standard Canvas Package consists of:

- Aft Curtain
- Aft Sunshade
- Front Curtains
- Side Curtains
- Canvas Storage Bag

A Canvas Cockpit Cover is available as an individual option.

⚠ DANGER

Exhaust fumes from engines contain deadly carbon monoxide gas (CO). Boats enclosed with canvas or with poor ventilation are most likely to collect fumes.

CO sickness symptoms include headache, nausea and dizziness. Do not mistake these symptoms for sea sickness.

Ventilate boat. See Section 1.4, Carbon Monoxide, for more details.

Do not use the rear (aft) curtain while engine is running or boat is moving.

16. ELECTRICAL SCHEMATICS

This owner's manual contains electrical schematics and wiring harness illustrations for your boat. These electrical schematics were generated by electrical CAD designers at the engineering division for technical reference and service technicians. Sea Ray® does not recommend that you attempt to work on the boat's electrical system yourself. Instead, we recommend that you take your boat to your authorized Sea Ray® dealer for service. Sea Ray® reserves the right to change or update the electrical system on any model at any time without notice to the consumer and is NOT obligated to make any updates to units built prior to changes.

DC WIRING DIAGRAM
DRAWING NO. 09-601 (1 OF 8)
(FIG. 20.1)

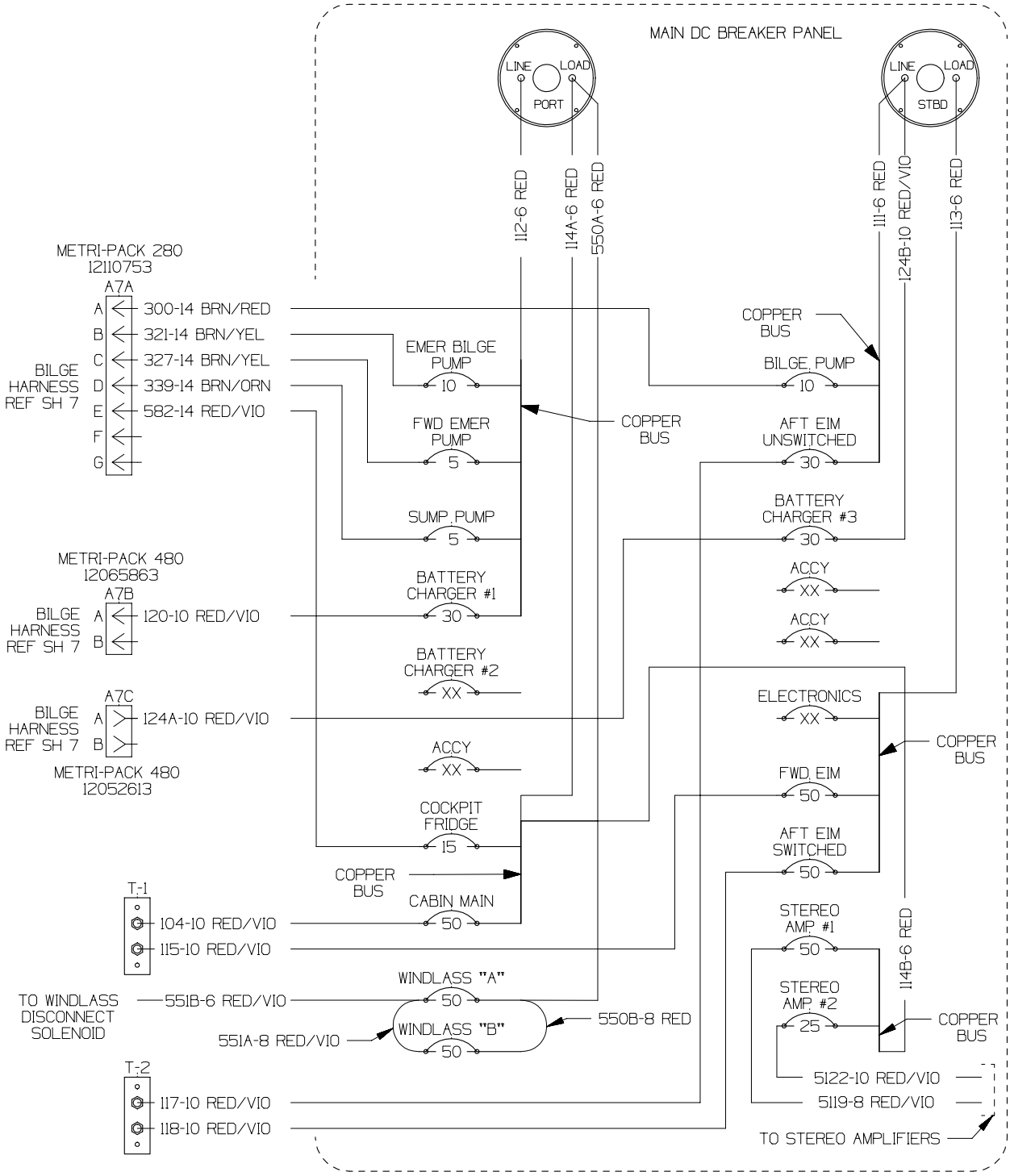

Warning:
DO NOT attempt to work on the electrical system of this boat without professional assistance.

DC WIRING DIAGRAM
DRAWING NO. 09-601 (2 OF 8)
(FIG. 21.1)

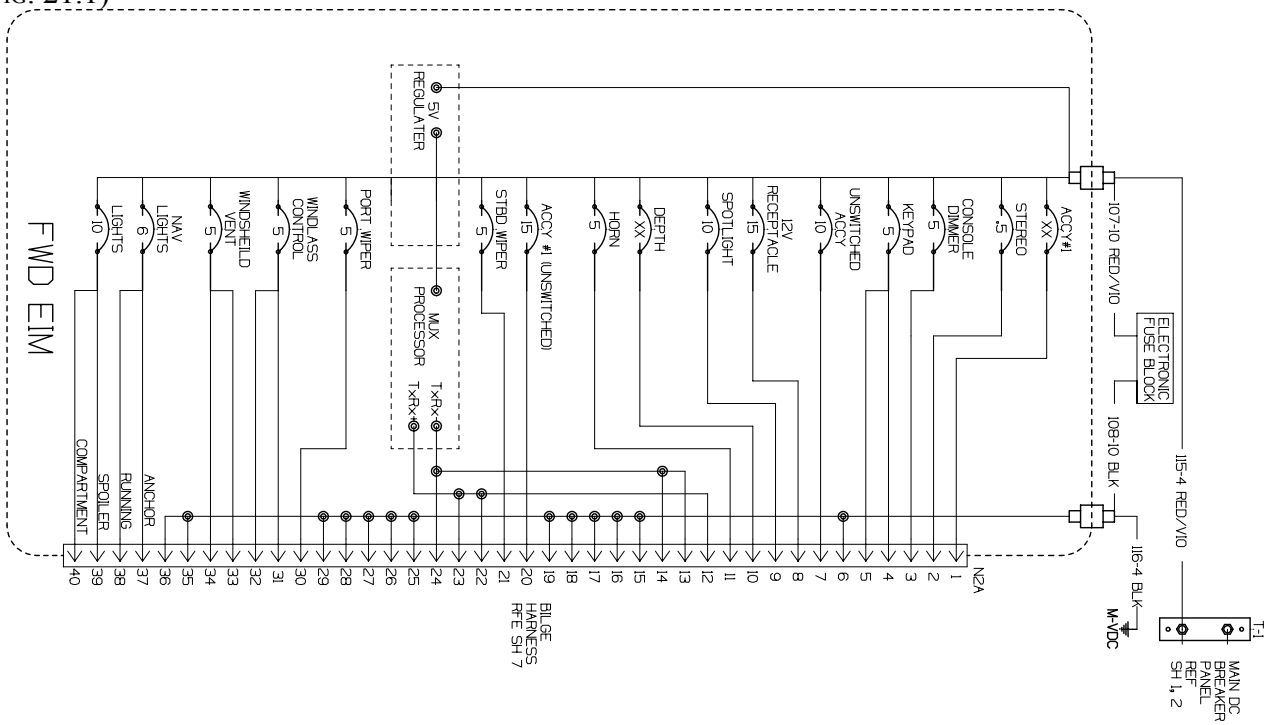

DC WIRING DIAGRAM
DRAWING NO. 09-601 (3 OF 8)
(FIG. 21.2)

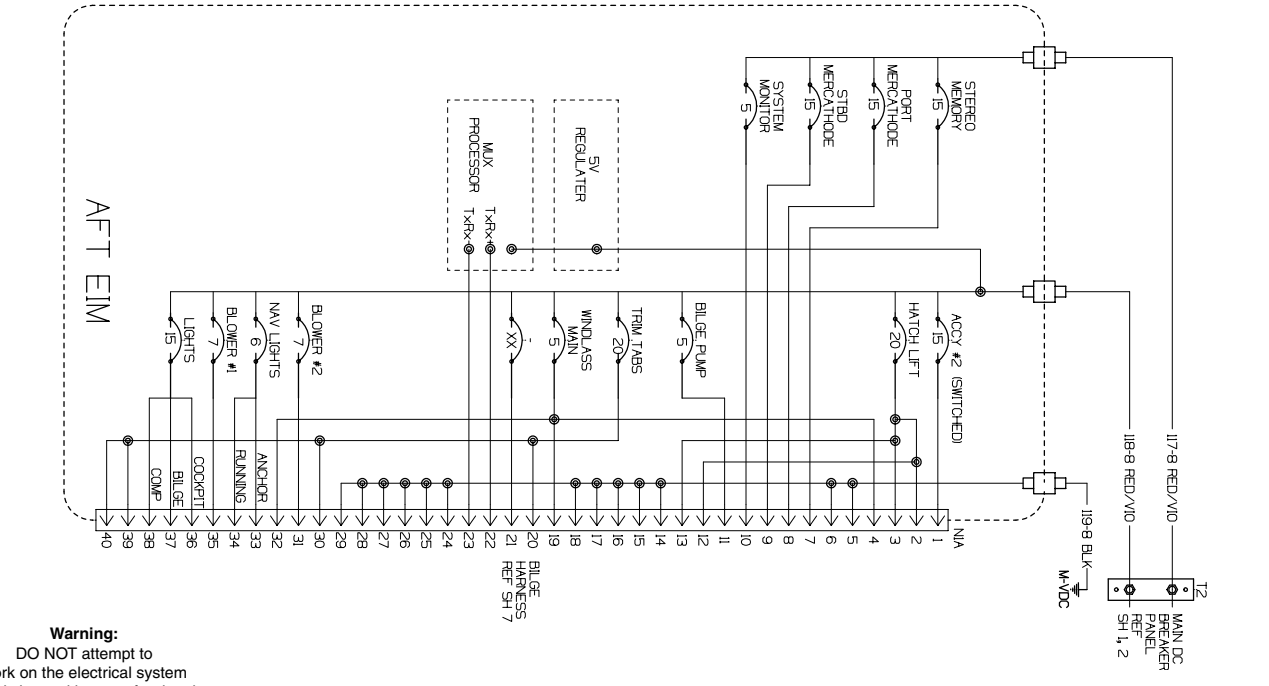

Warning:
DO NOT attempt to work on the electrical system of this boat without professional assistance.

DC WIRING DIAGRAM
DRAWING NO. 09-601 (4 OF 8)
(FIG. 22.1)

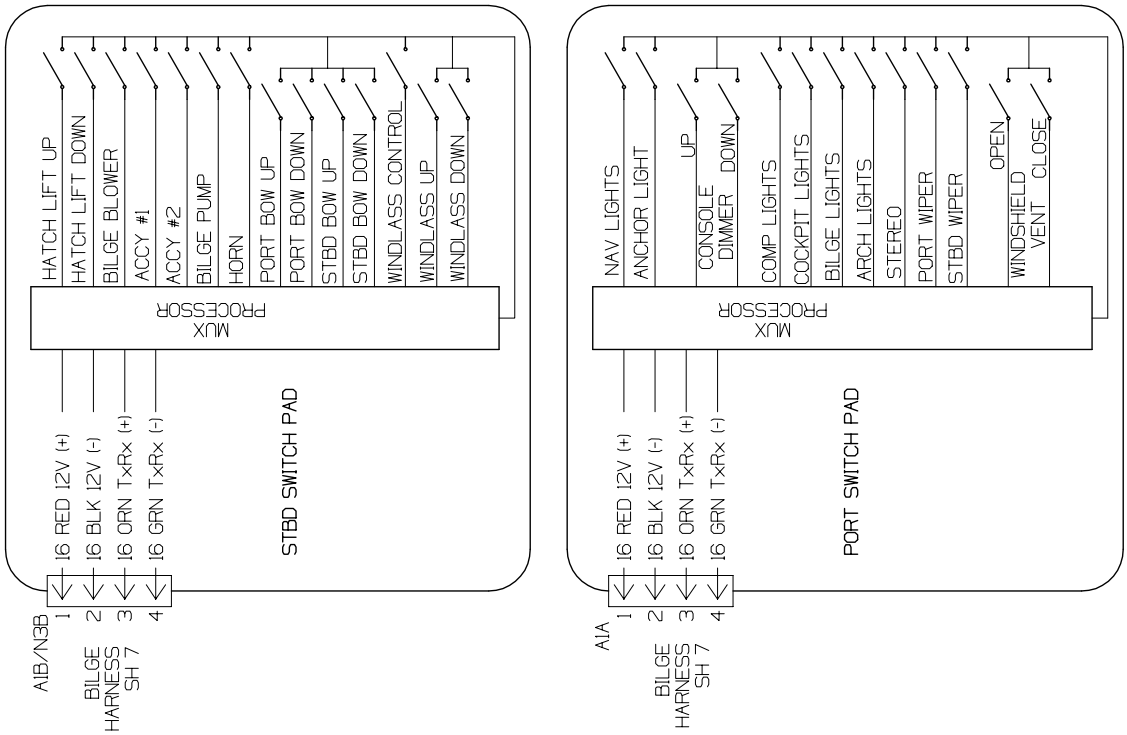

DC WIRING DIAGRAM
DRAWING NO. 09-601 (5 OF 8)
(FIG. 22.2)

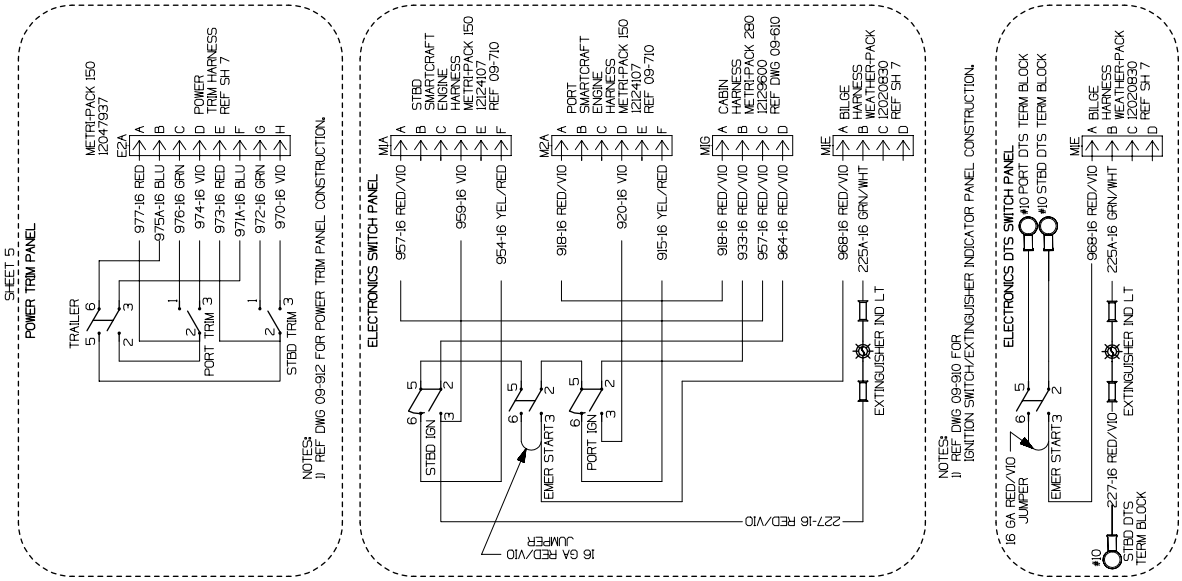

Warning:
DO NOT attempt to work on the electrical system of this boat without professional assistance.

DC WIRING DIAGRAM
DRAWING NO. 09-601 (6 OF 8)
(FIG. 23.1)

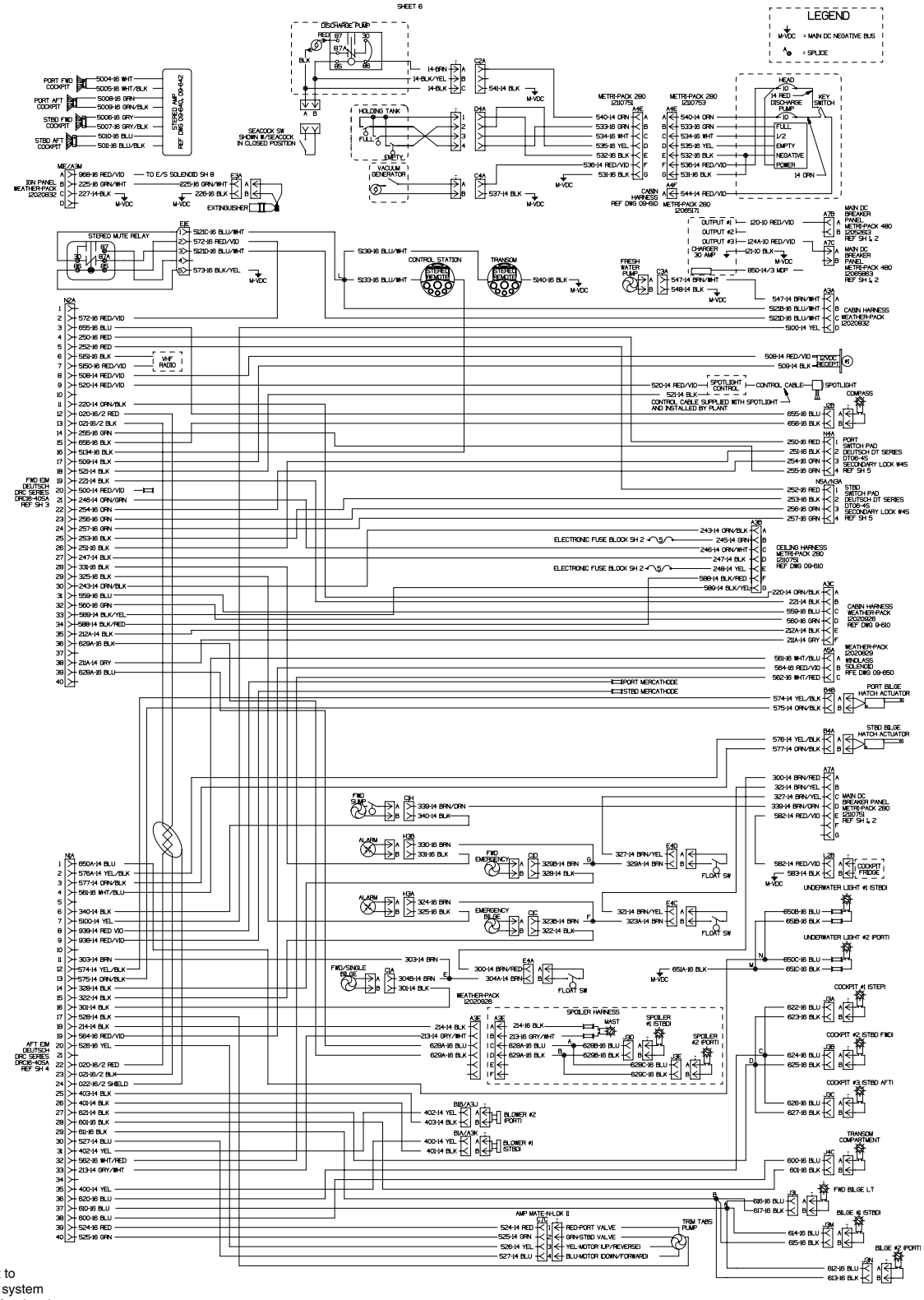

Warning:
DO NOT attempt to work on the electrical system of this boat without professional assistance.

DC WIRING DIAGRAM
DRAWING NO. 09-601 (7 OF 8)
(FIG. 24.1)

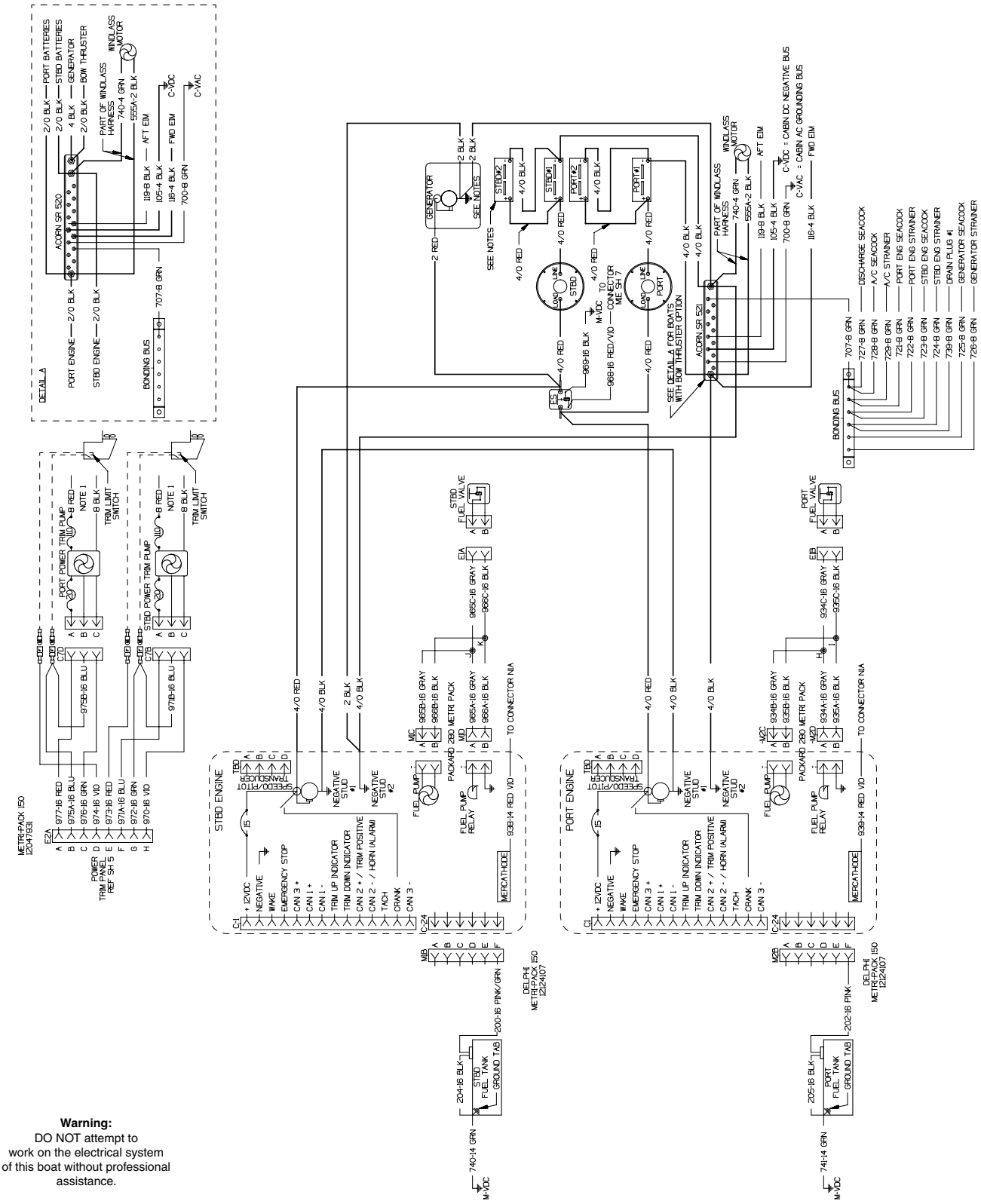

Warning:
DO NOT attempt to work on the electrical system of this boat without professional assistance.

DC WIRING DIAGRAM
DRAWING NO. 09-601 (8 OF 8)
(FIG. 25.1)

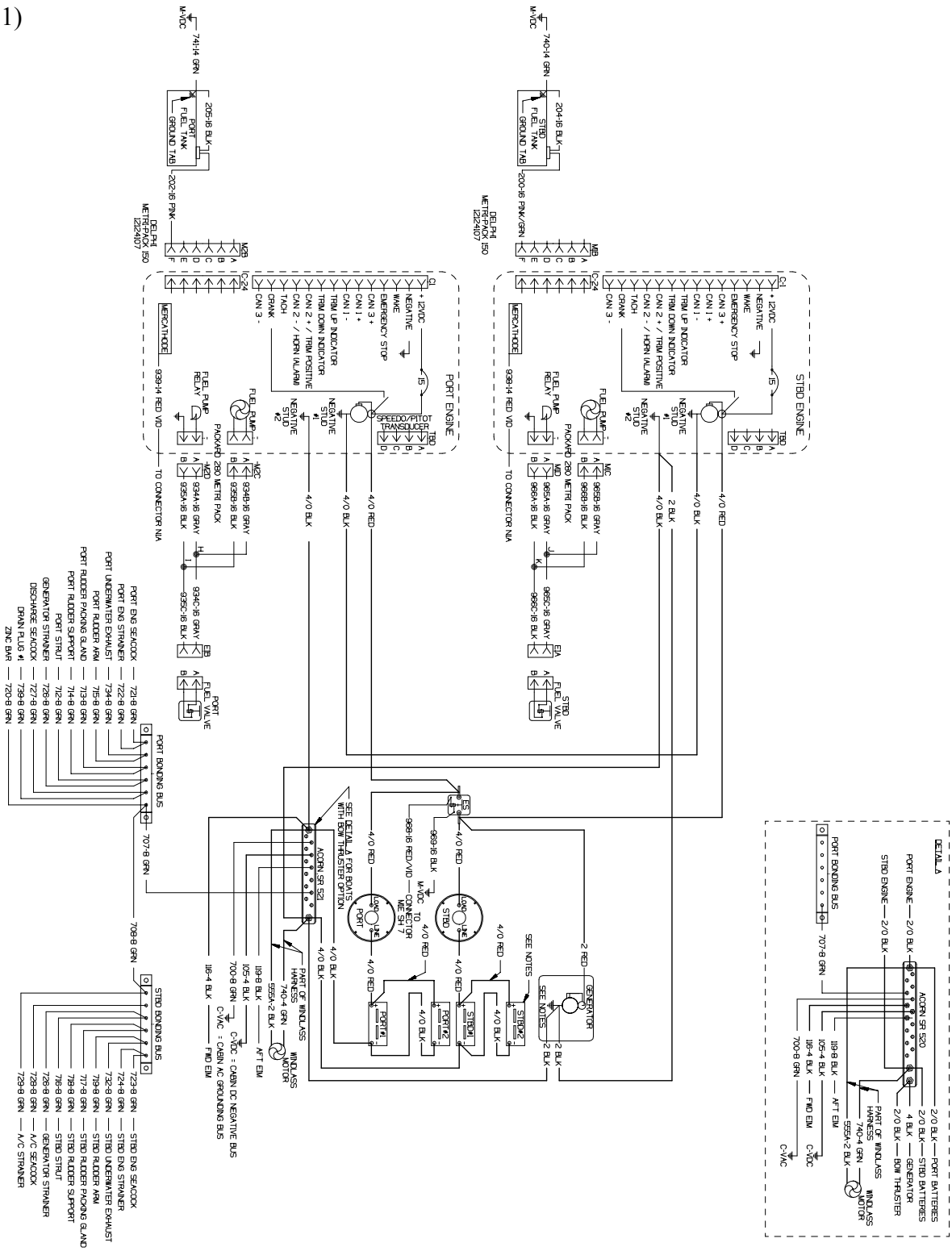

Warning:
DO NOT attempt to work on the electrical system of this boat without professional assistance.

DC WIRING DIAGRAM (VOLVO DIESEL OPTION)
DRAWING NO. 09-605
(FIG. 26.1)

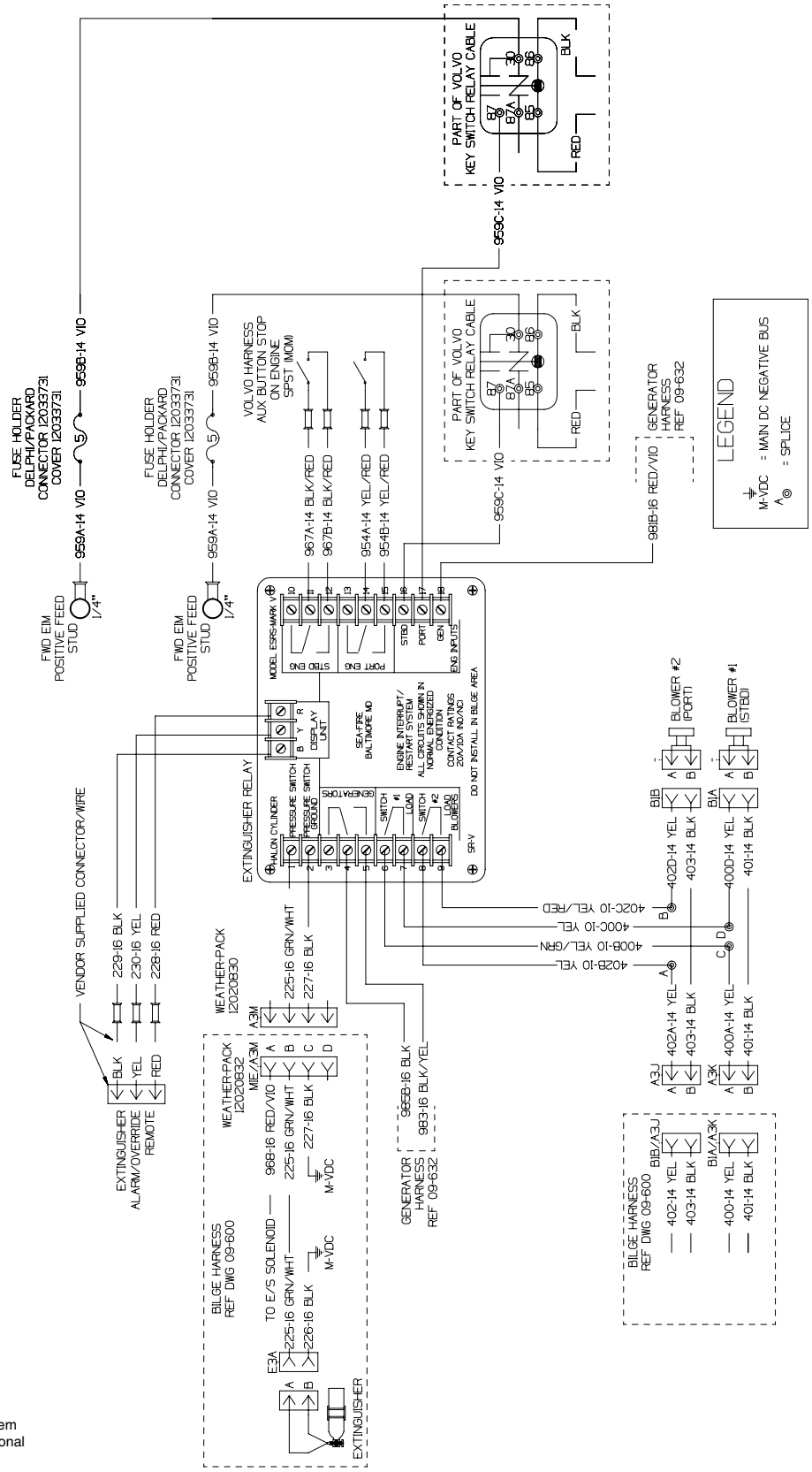

Warning:
DO NOT attempt to work on the electrical system of this boat without professional assistance.

CABIN DC WIRING DIAGRAM
DRAWING NO. 09-610
(FIG. 27.1)

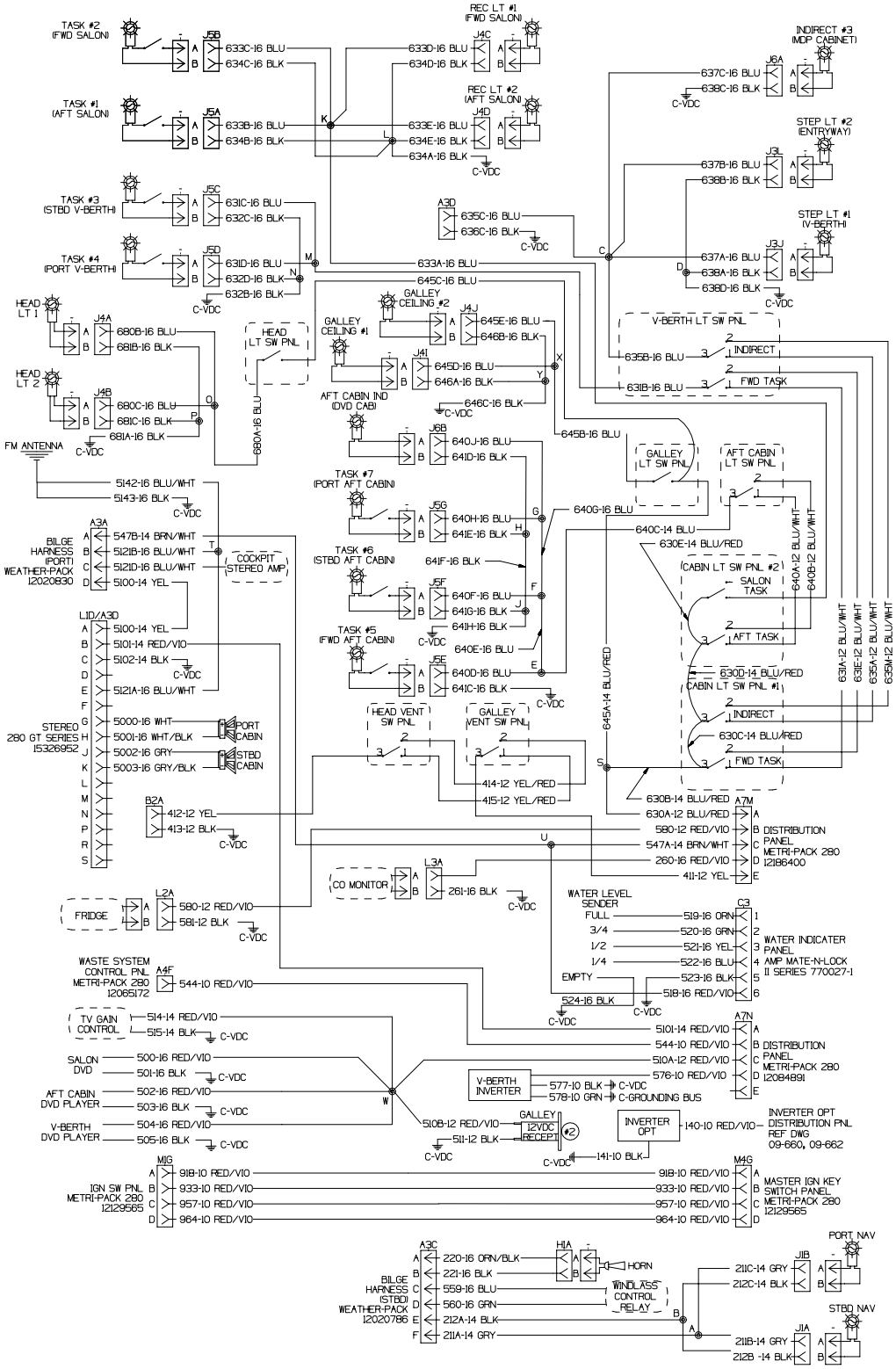

Warning:
DO NOT attempt to work on the electrical system of this boat without professional assistance.

BOW/STERN THRUSTER WIRING DIAGRAM
DRAWING NO. 09-612
(FIG. 28.1)

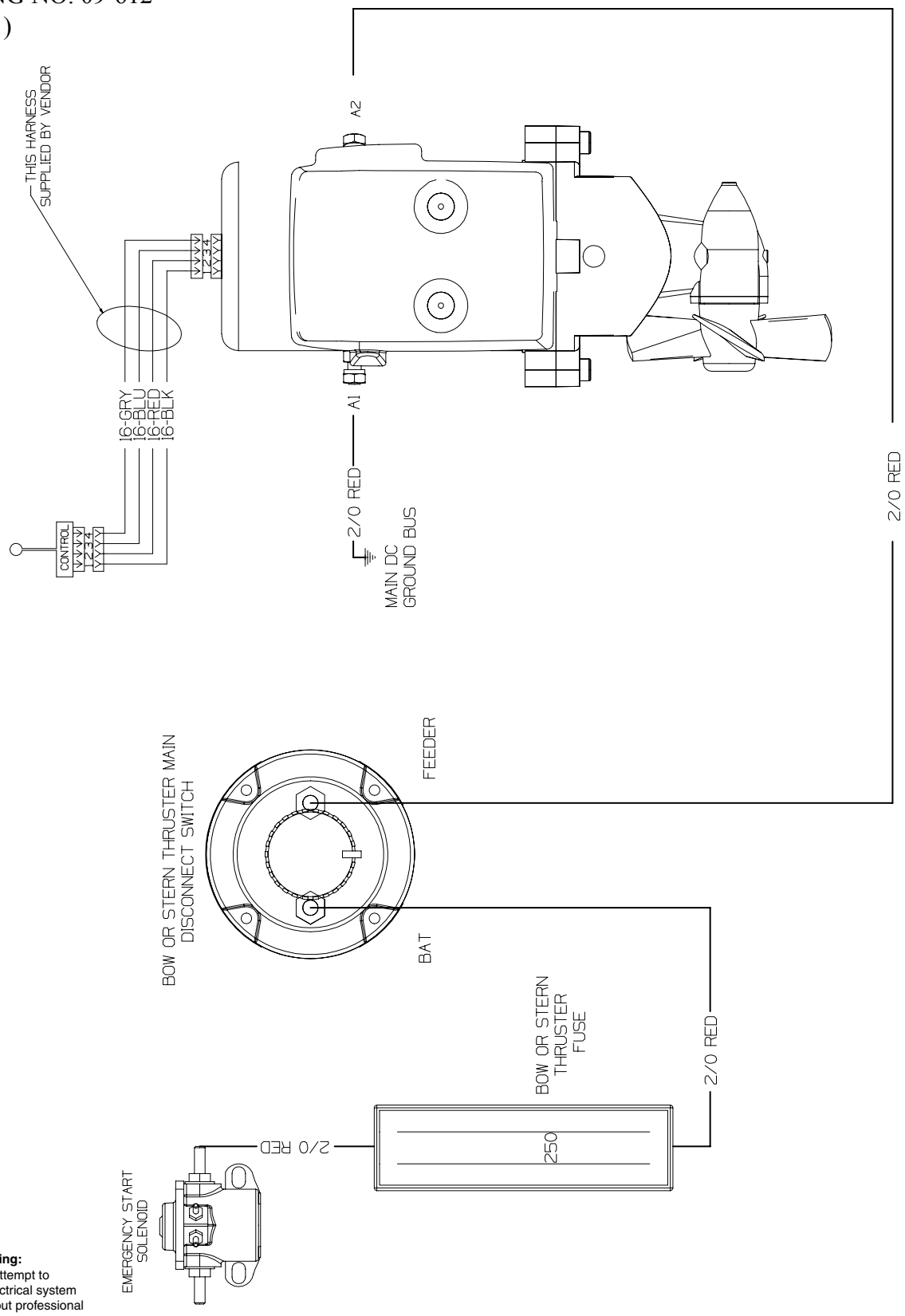

Warning:
DO NOT attempt to work on the electrical system of this boat without professional assistance.

TV WIRING DIAGRAM
DRAWING NO. 09-620 (1 OF 5)
(FIG. 29.1)

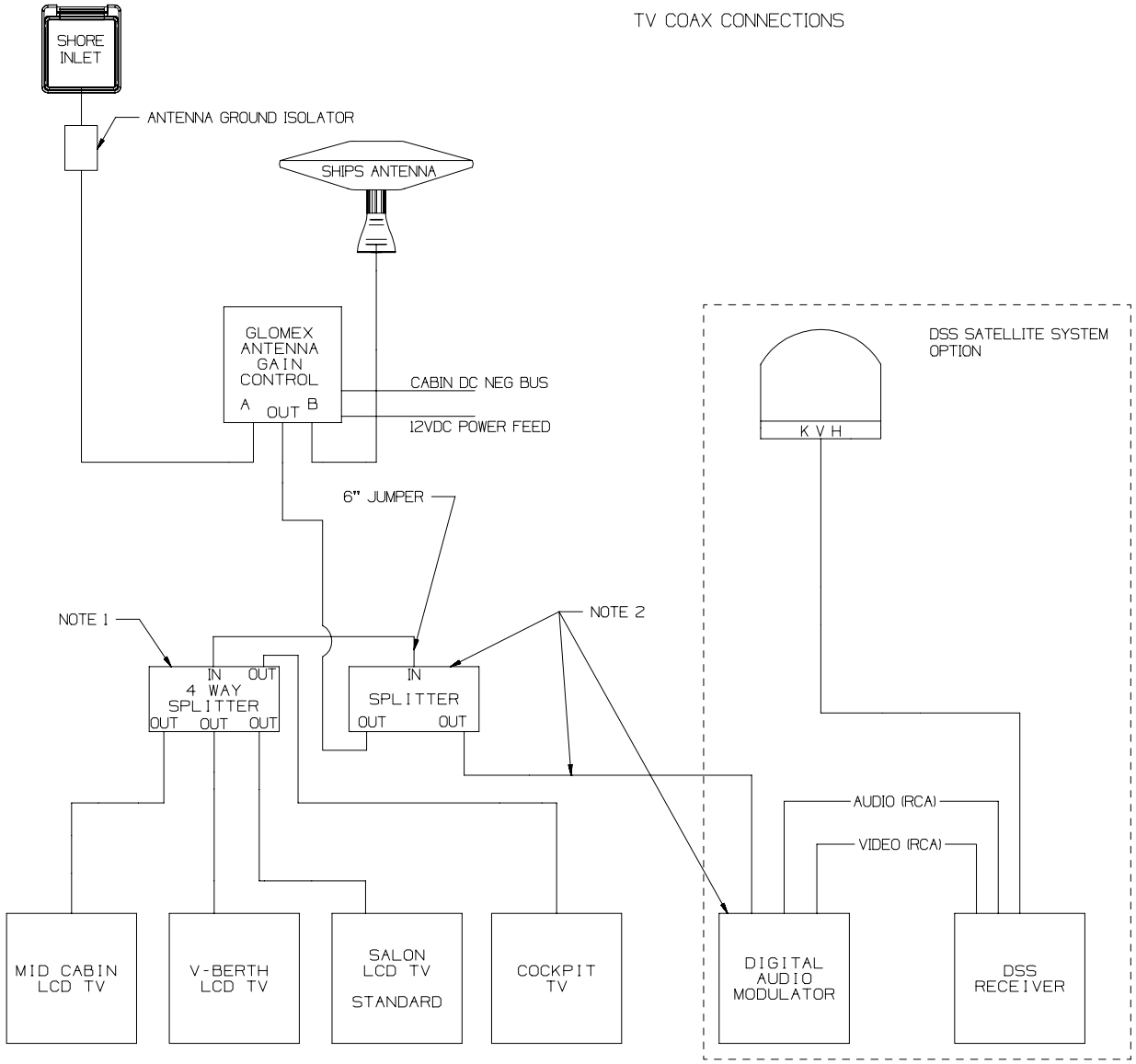

Warning:
DO NOT attempt to work on the electrical system of this boat without professional assistance.

TV WIRING DIAGRAM
DRAWING NO. 09-620 (2 OF 5)
(FIG. 30.1)

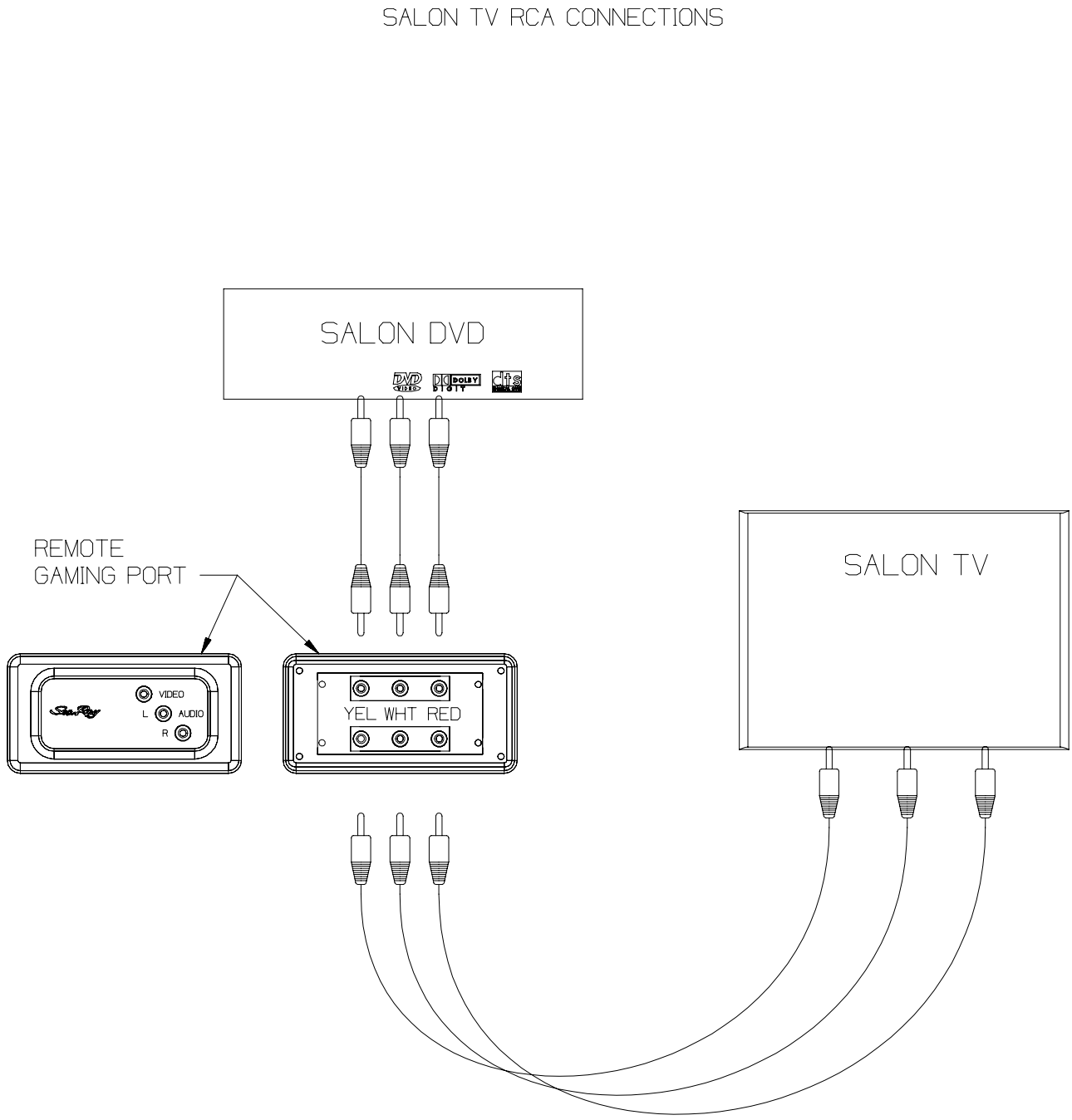

Warning:
DO NOT attempt to work on the electrical system of this boat without professional assistance.

TV WIRING DIAGRAM
DRAWING NO. 09-620 (3 OF 5)
(FIG. 31.1)

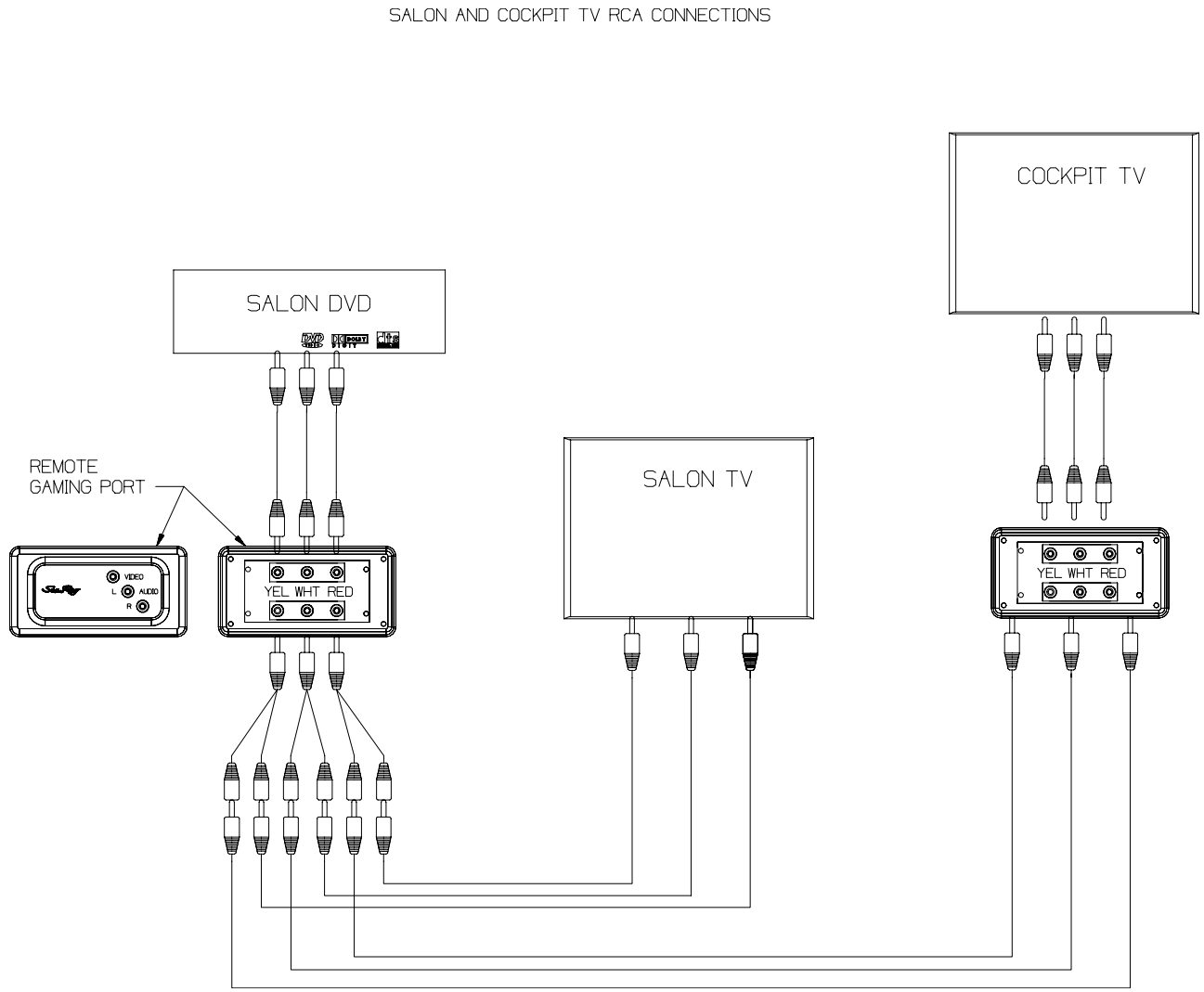

Warning:
DO NOT attempt to work on the electrical system of this boat without professional assistance.

TV WIRING DIAGRAM
DRAWING NO. 09-620 (4 OF 5)
(FIG. 32.1)

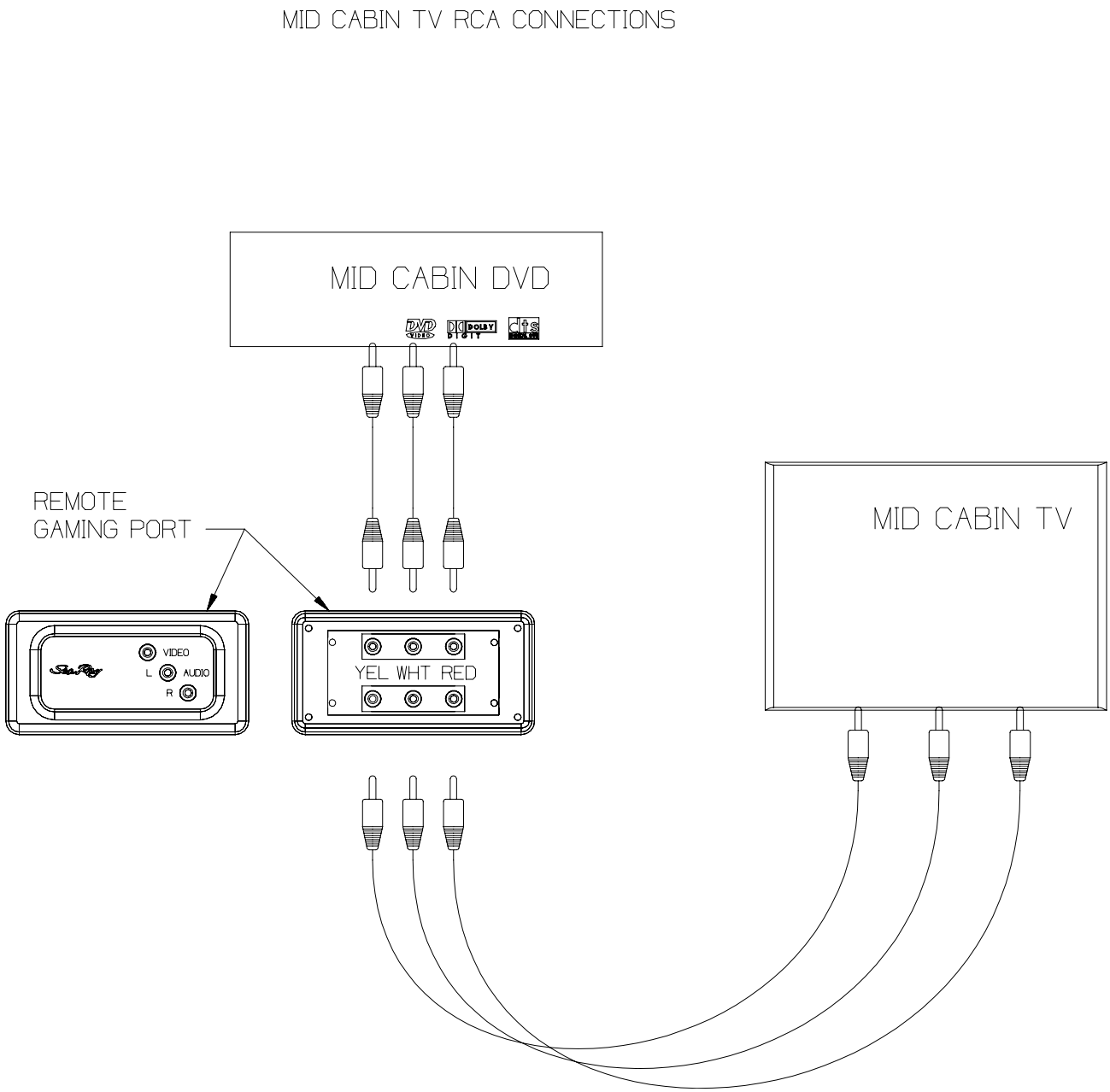

Warning:
DO NOT attempt to work on the electrical system of this boat without professional assistance.

TV WIRING DIAGRAM
DRAWING NO. 09-620 (5 OF 5)
(FIG. 33.1)

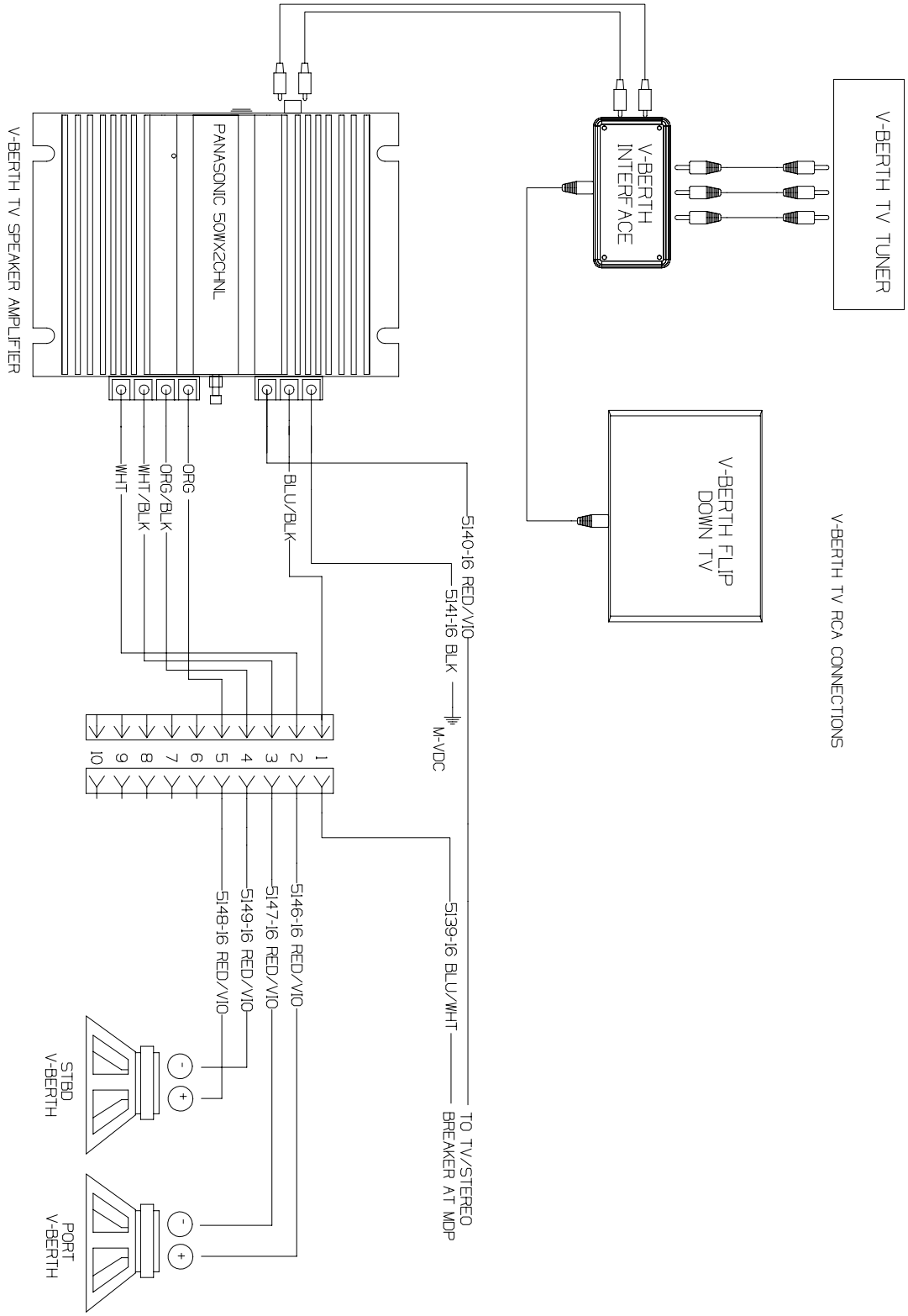

Warning:
DO NOT attempt to work on the electrical system of this boat without professional assistance.

GENERATOR WIRING DIAGRAM (GAS 110V OPTION)
DRAWING NO. 09-630
(FIG. 34.1)

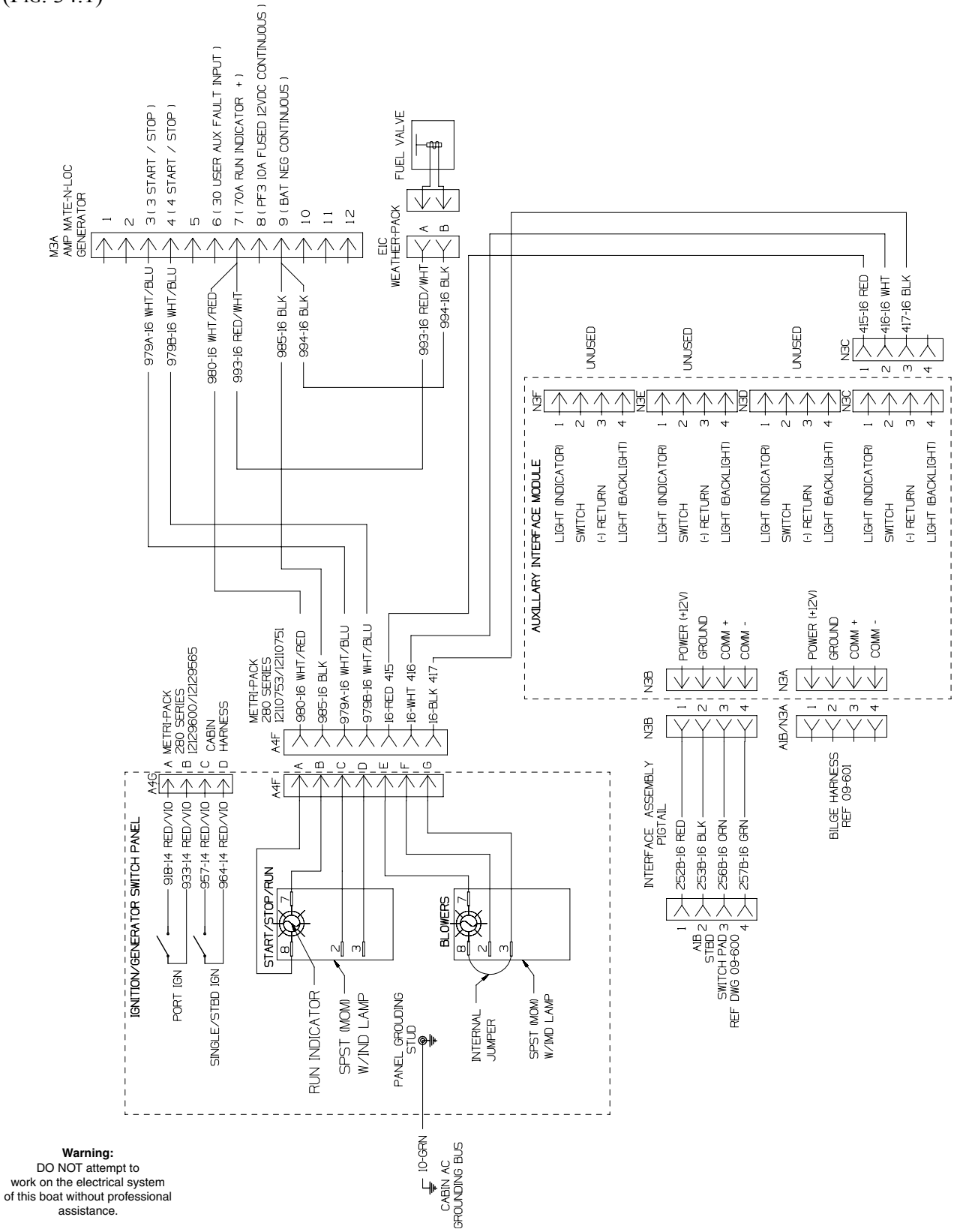

Warning:
DO NOT attempt to work on the electrical system of this boat without professional assistance.

GENERATOR WIRING DIAGRAM (DIESEL OPTION)
DRAWING NO. 09-632
(FIG. 35.1)

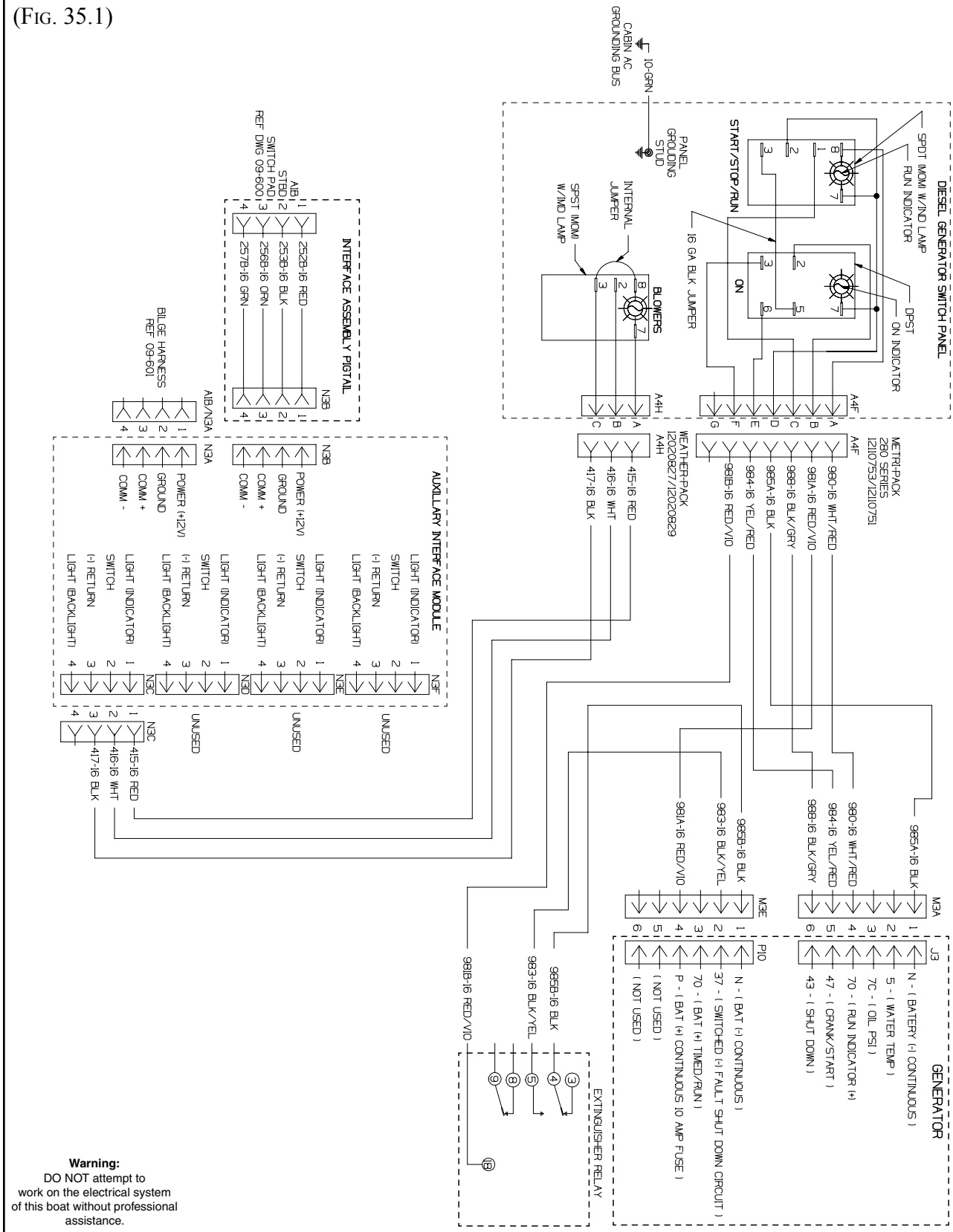

Warning:
DO NOT attempt to work on the electrical system of this boat without professional assistance.

GENERATOR WIRING DIAGRAM
DRAWING NO. 09-634
(FIG. 36.1)

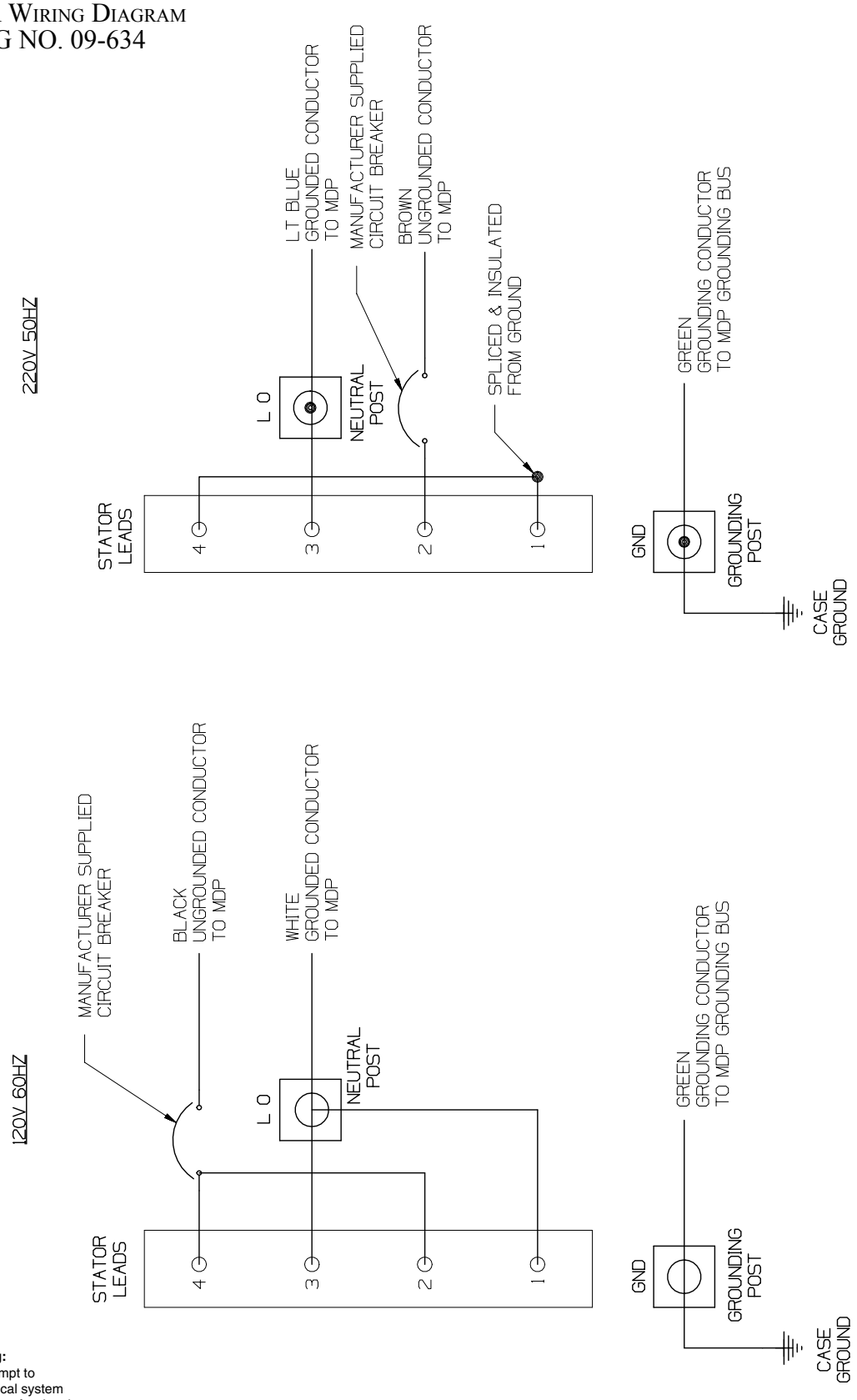

Warning:
DO NOT attempt to work on the electrical system of this boat without professional assistance.

STEREO WIRING DIAGRAM (STANDARD)
DRAWING NO. 09-640
(FIG. 37.1)

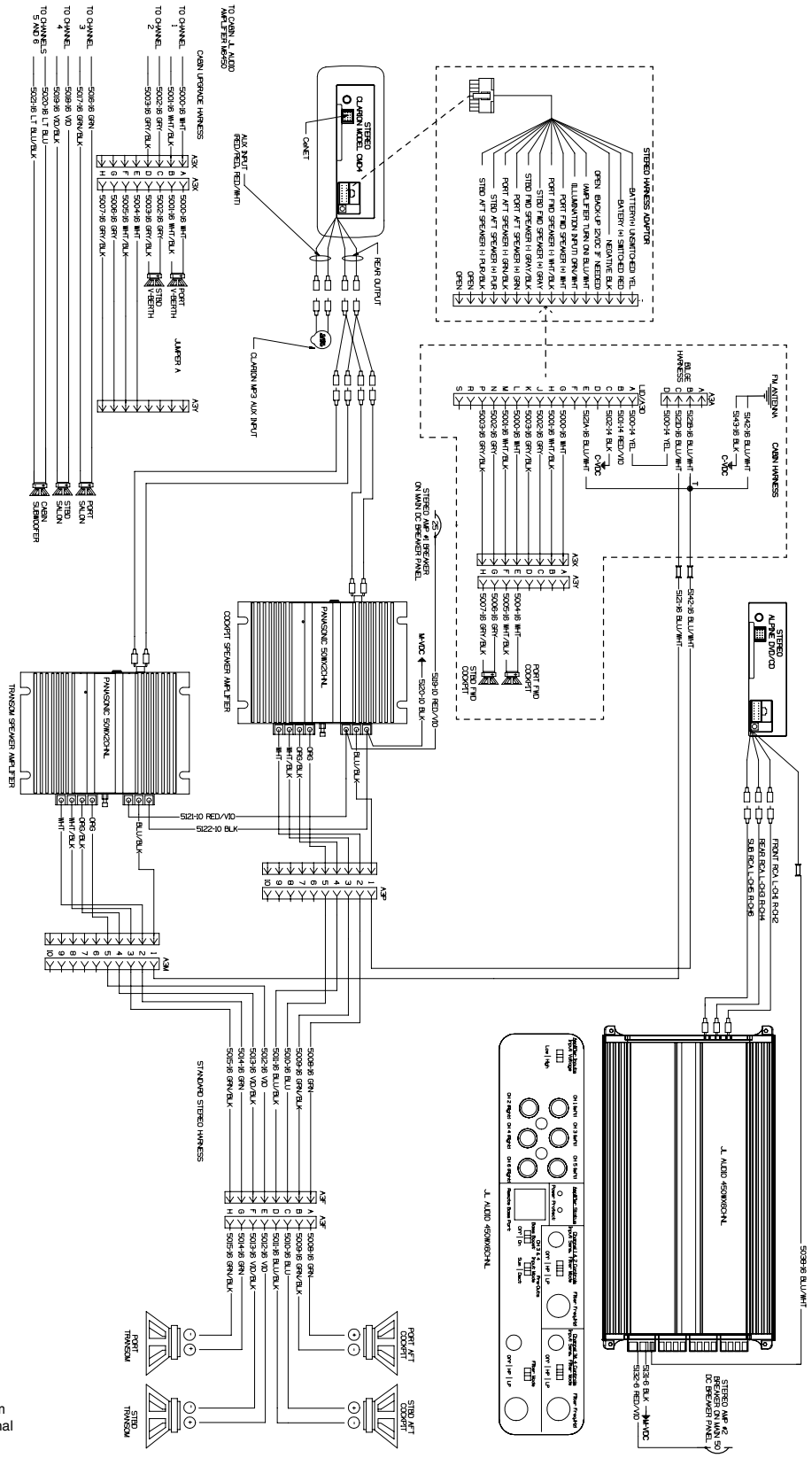

Warning:
DO NOT attempt to work on the electrical system of this boat without professional assistance.

STEREO WIRING DIAGRAM (PREMIUM)
DRAWING NO. 09-642
(FIG. 38.1)

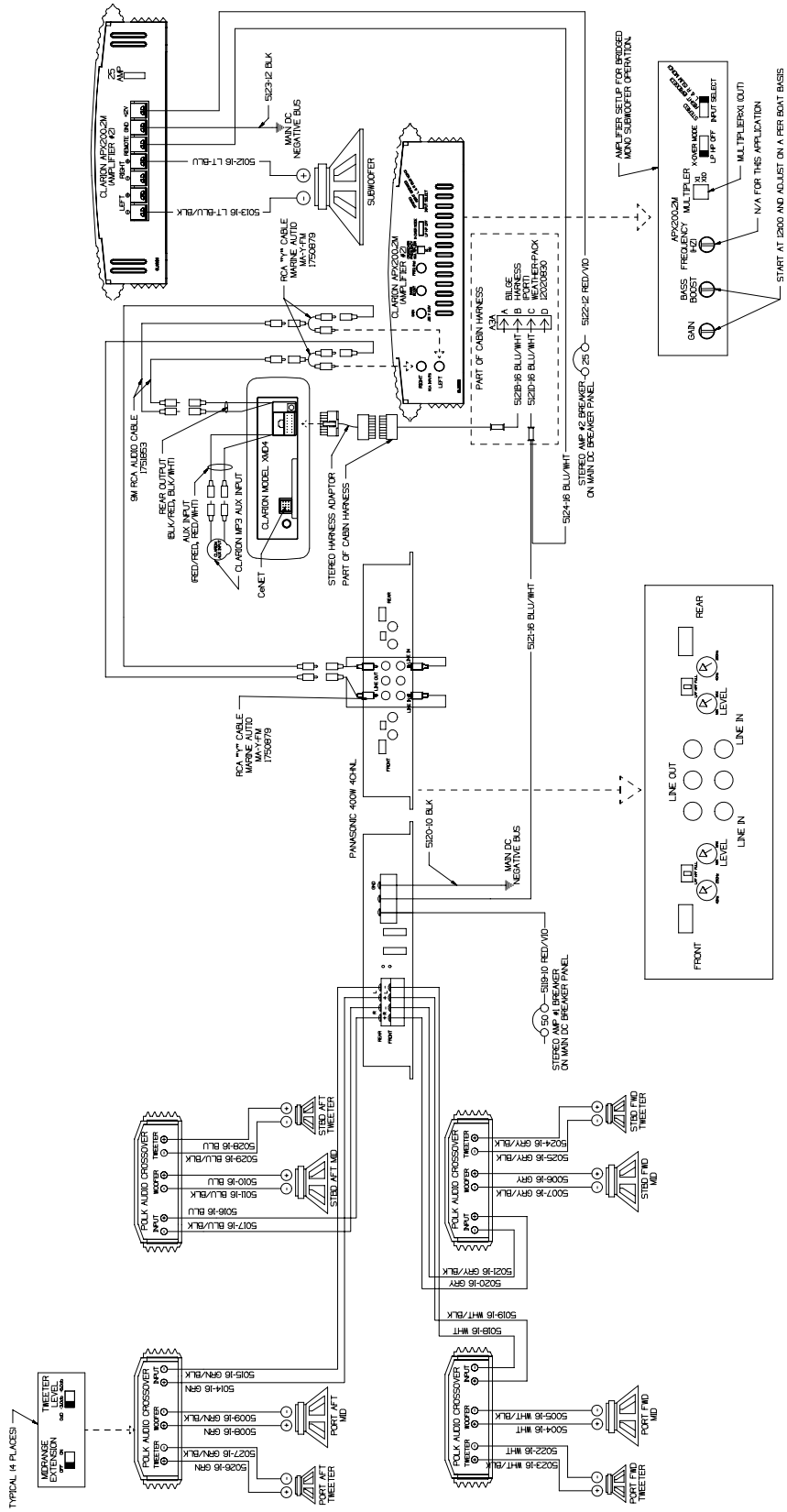

Warning:
DO NOT attempt to work on the electrical system of this boat without professional assistance.

WINDLASS WIRING DIAGRAM
DRAWING NO. 09-650
(FIG. 39.1)

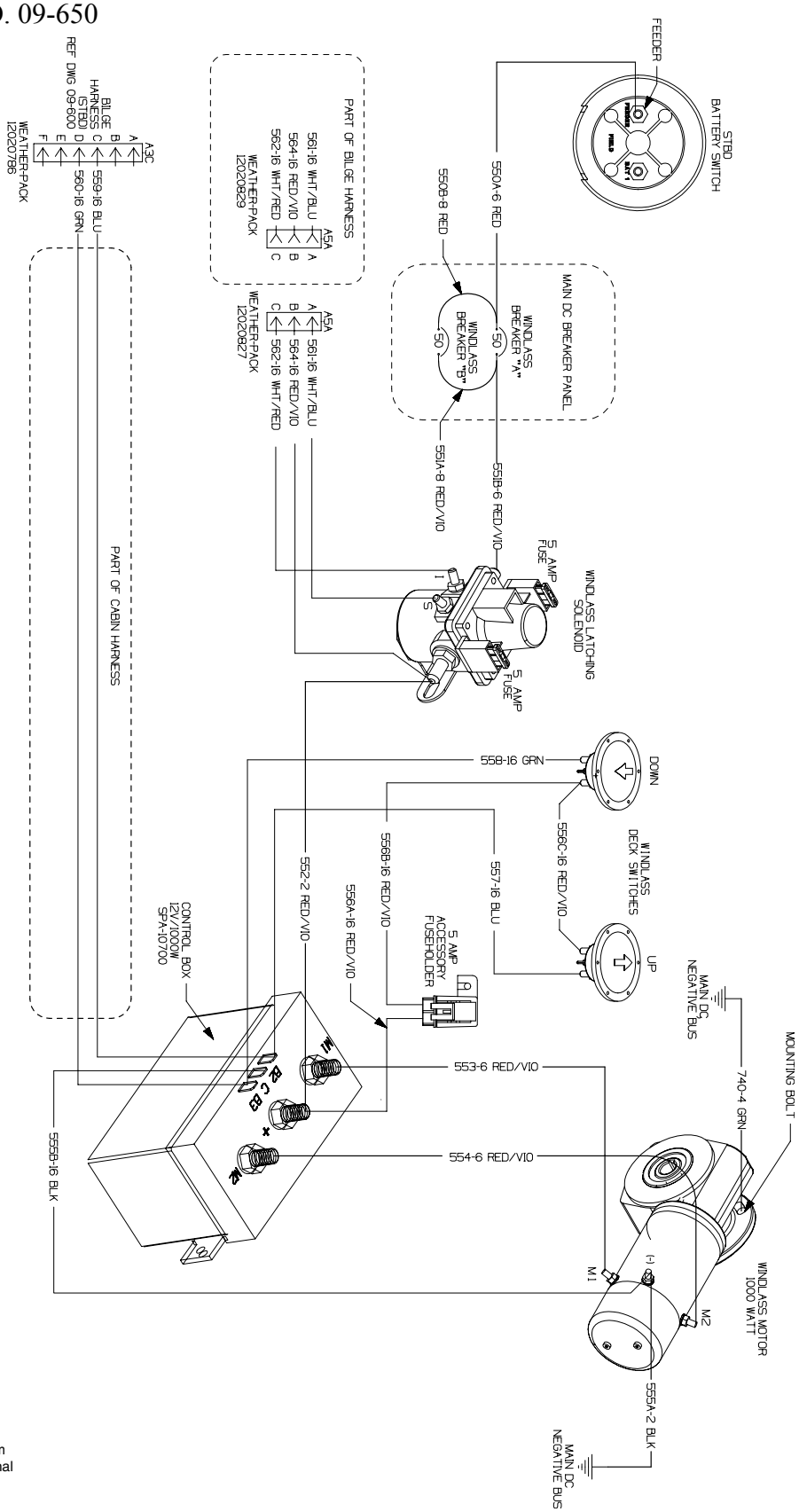

Warning:
DO NOT attempt to work on the electrical system of this boat without professional assistance.

MAIN DISTRIBUTION PANEL (MDP) WIRING DIAGRAM (1 OF 2)
DRAWING NO. 09-660 (1 OF 2)
(FIG. 40.1)

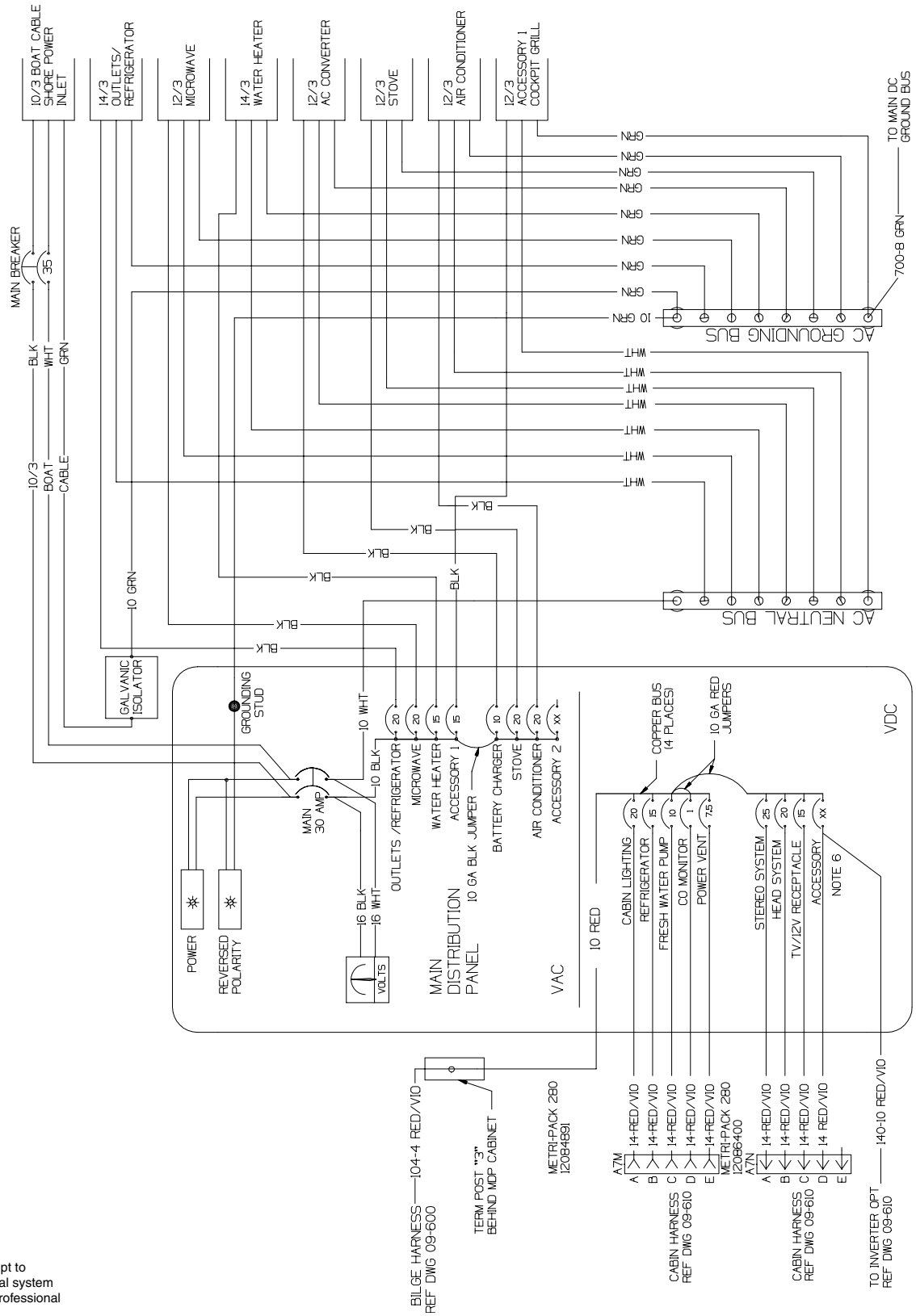

Warning:
DO NOT attempt to work on the electrical system of this boat without professional assistance.

MDP WIRING DIAGRAM
DRAWING NO. 09-660 (2 OF 2)
(FIG. 41.1)

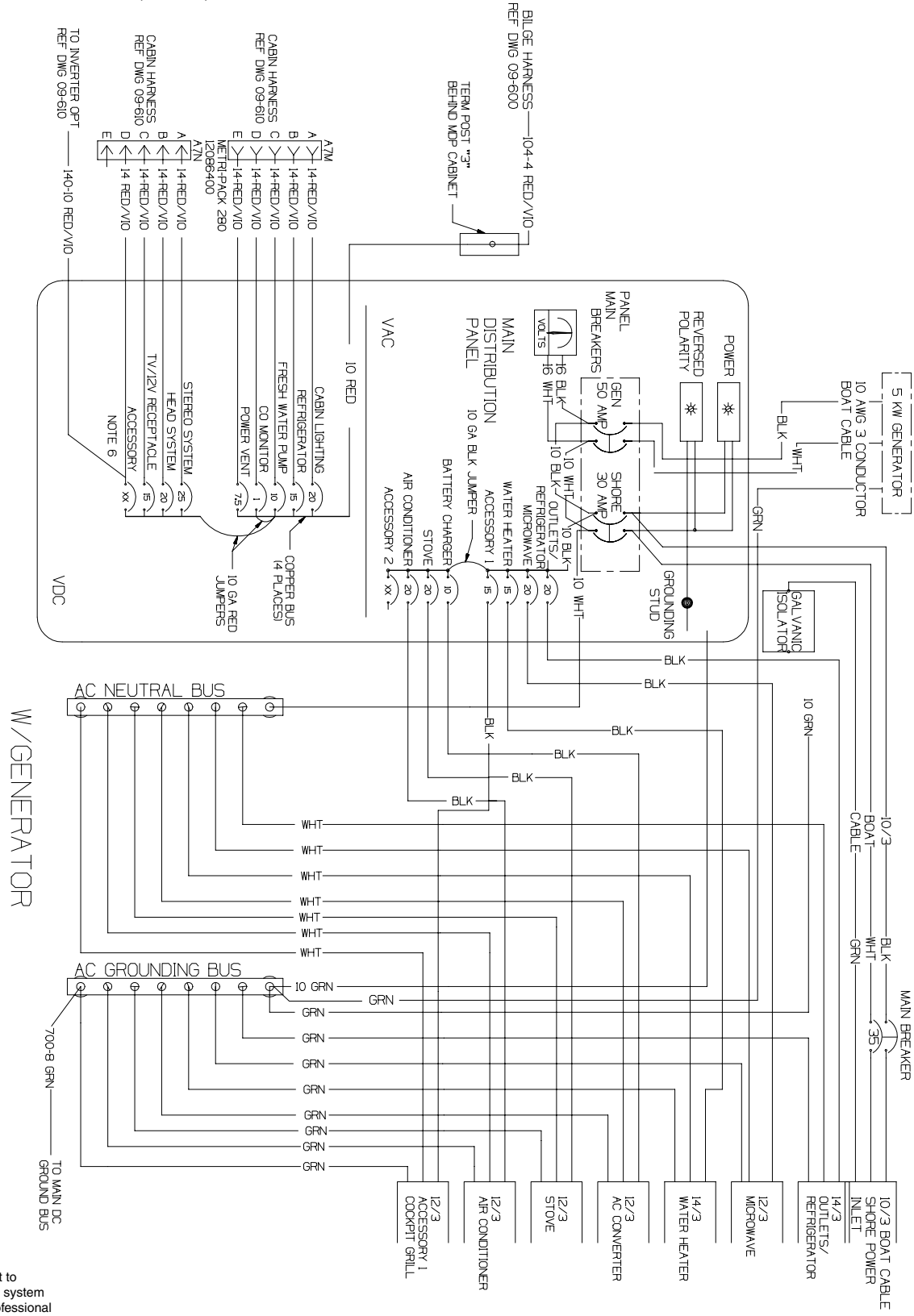

Warning:
DO NOT attempt to work on the electrical system of this boat without professional assistance.

MDP WIRING DIAGRAM (220V/50HZ OPTION)
DRAWING NO. 09-662 (1 OF 2)

(FIG. 42.1)

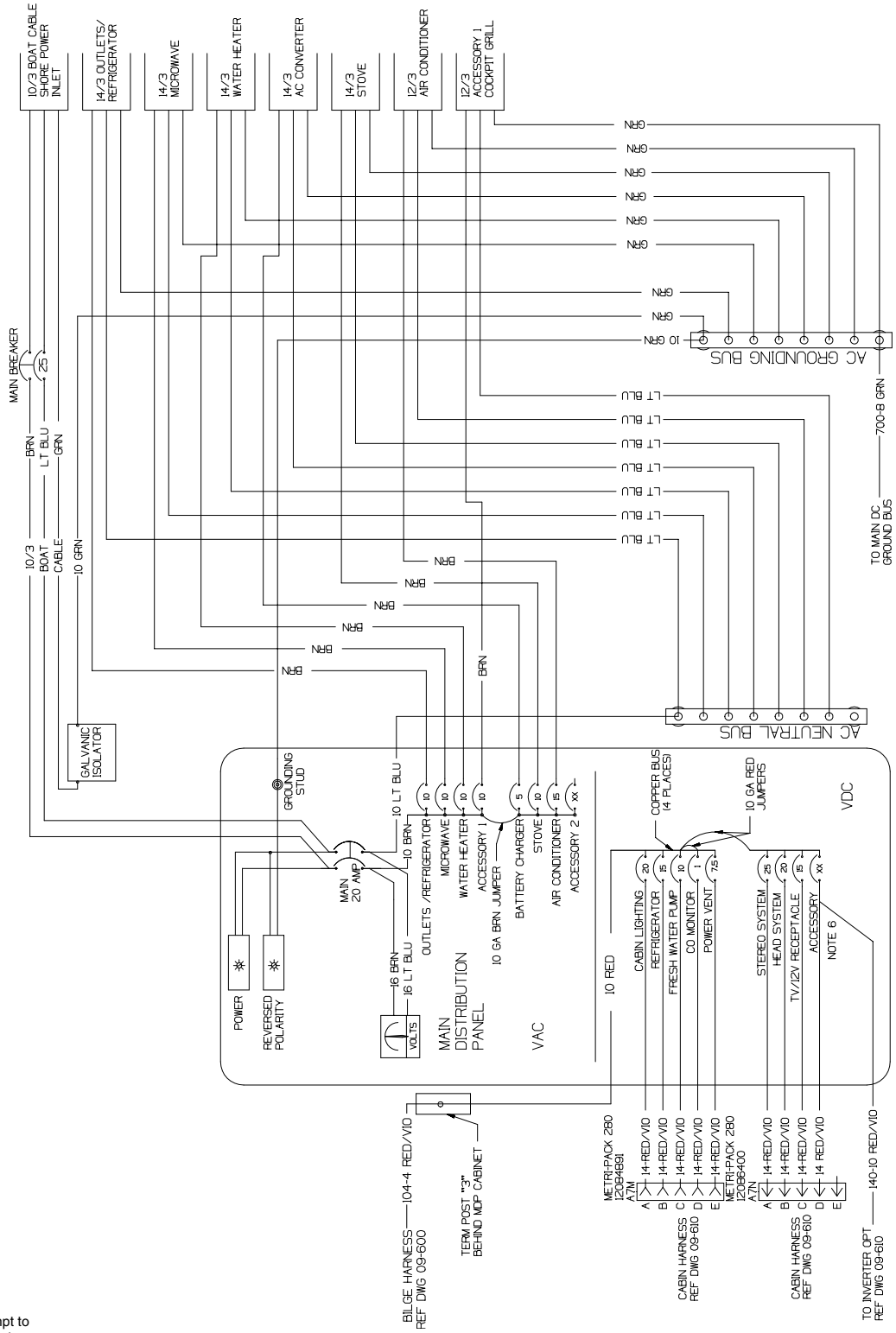

Warning:
DO NOT attempt to work on the electrical system of this boat without professional assistance.

MDP WIRING DIAGRAM (220V/50HZ OPTION)
DRAWING NO. 09-662 (2 OF 2)
(FIG. 43.1)

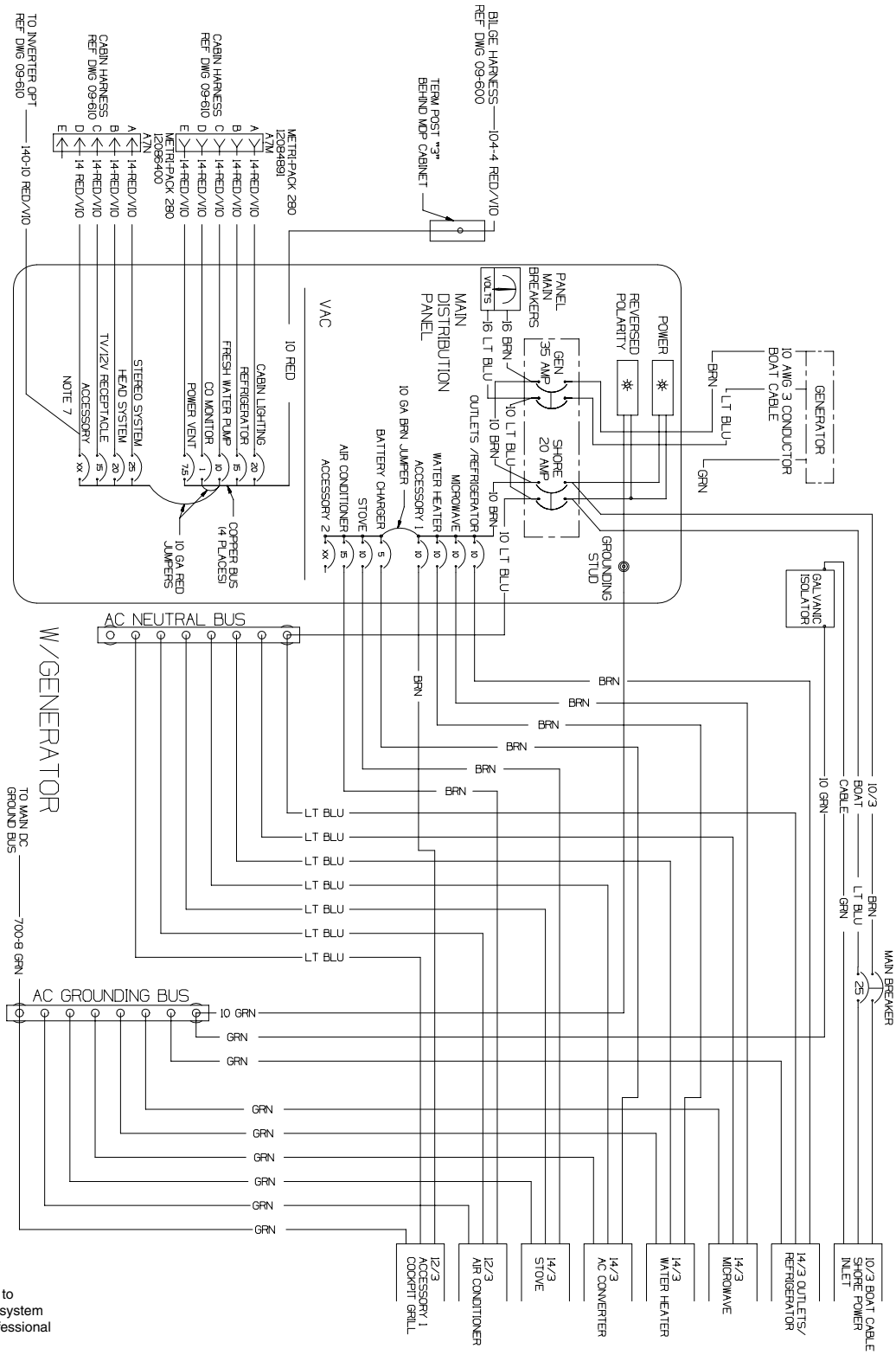

Warning:
DO NOT attempt to work on the electrical system of this boat without professional assistance.

INTERCONNECT DIAGRAM
DRAWING NO. 09-670
(FIG. 44.1)

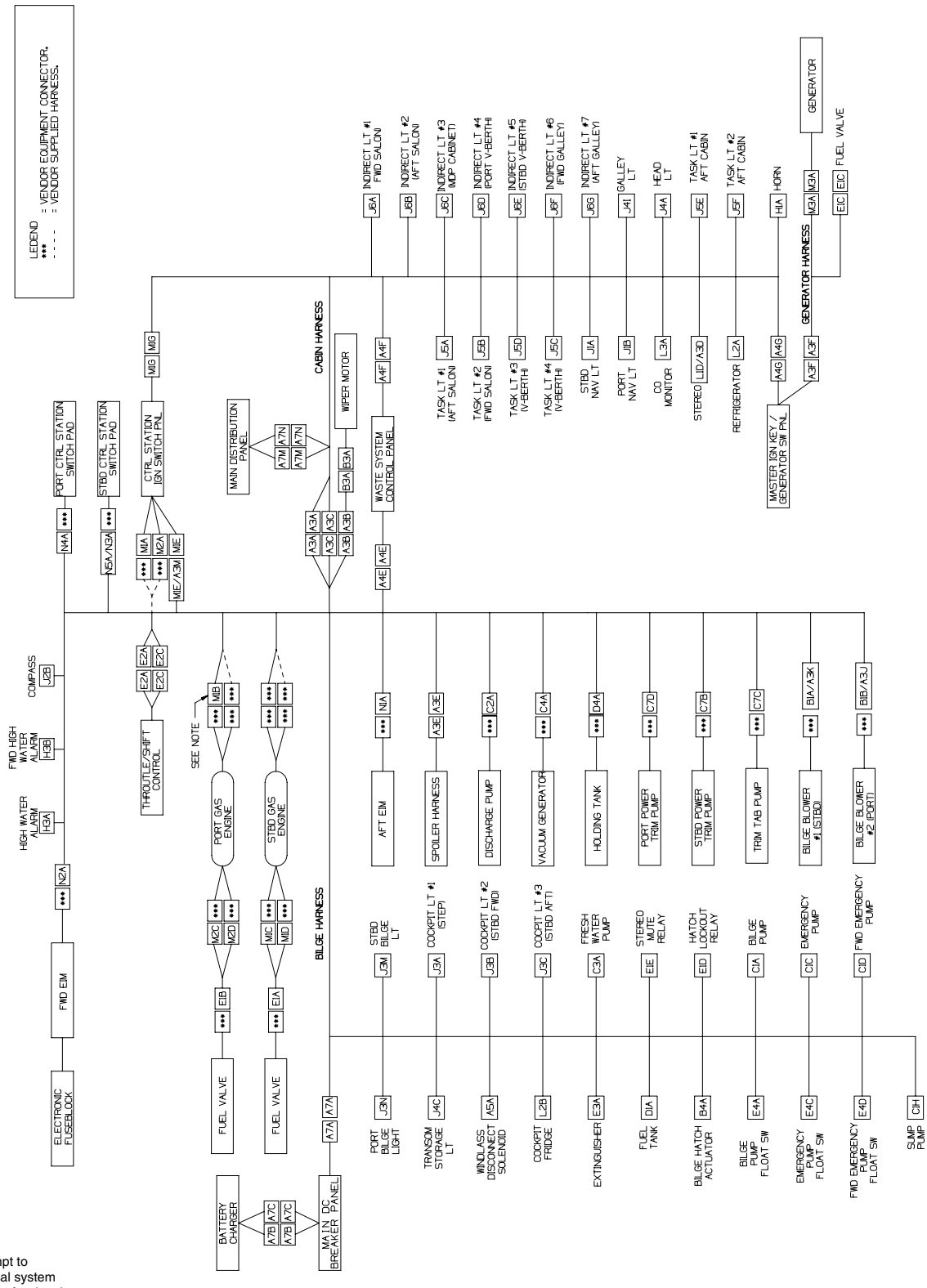

Warning:
DO NOT attempt to work on the electrical system of this boat without professional assistance.

AC SYSTEM WIRING DIAGRAM (1 OF 2)
DRAWING NO. 09-672 (1 OF 2)
(FIG. 45.1)

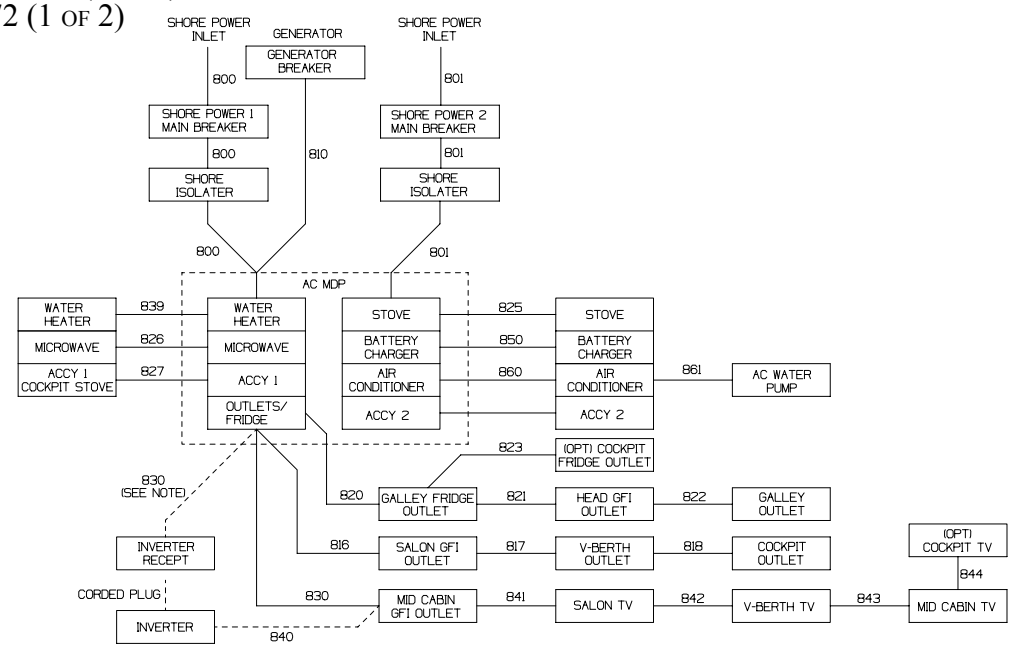

AC SYSTEM WIRING DIAGRAM (2 OF 2)
DRAWING NO. 09-672 (2 OF 2)
(FIG. 45.2)

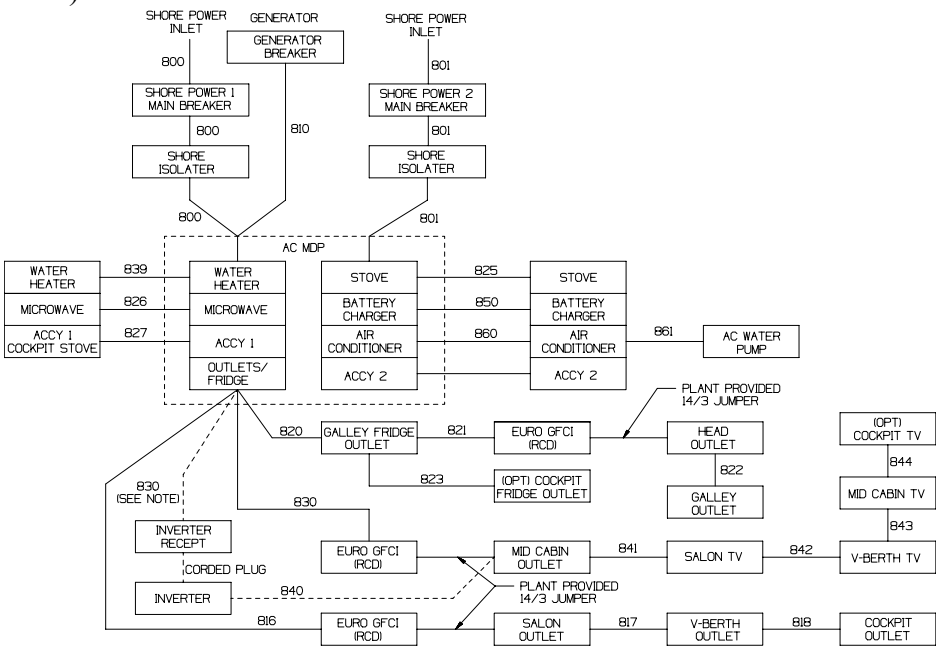

Warning:
DO NOT attempt to work on the electrical system of this boat without professional assistance.

BILGE HARNESS
DRAWING NO. 09-802 (1 OF 6)
(FIG. 46.1)

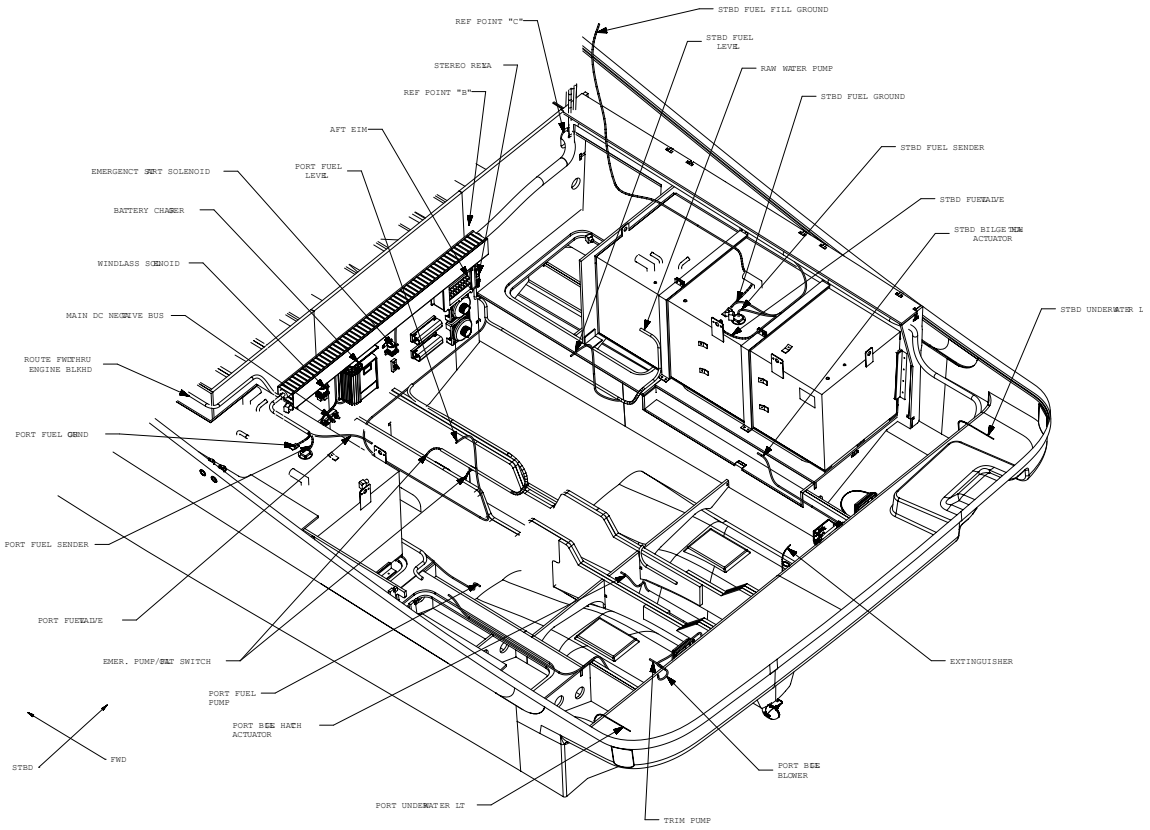

BILGE HARNESS
DRAWING NO. 09-802 (2 OF 6)
(FIG. 46.2)

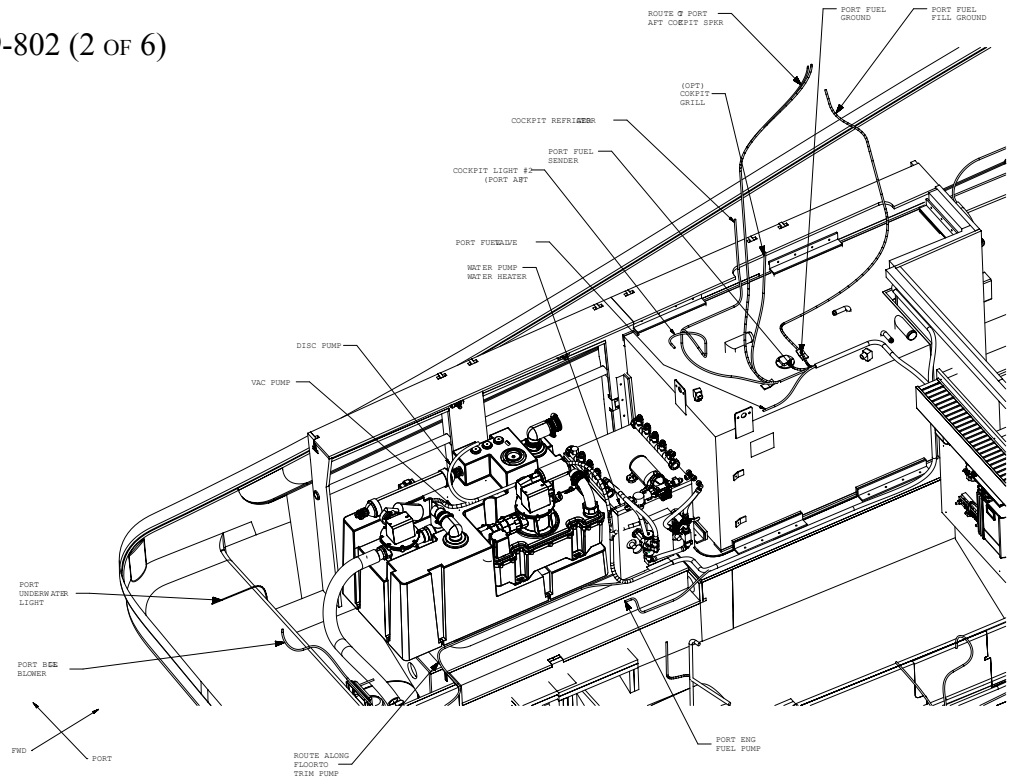

Warning:
DO NOT attempt to work on the electrical system of this boat without professional assistance.

BILGE HARNESS
DRAWING NO. 09-802 (3 OF 6)
(FIG. 47.1)

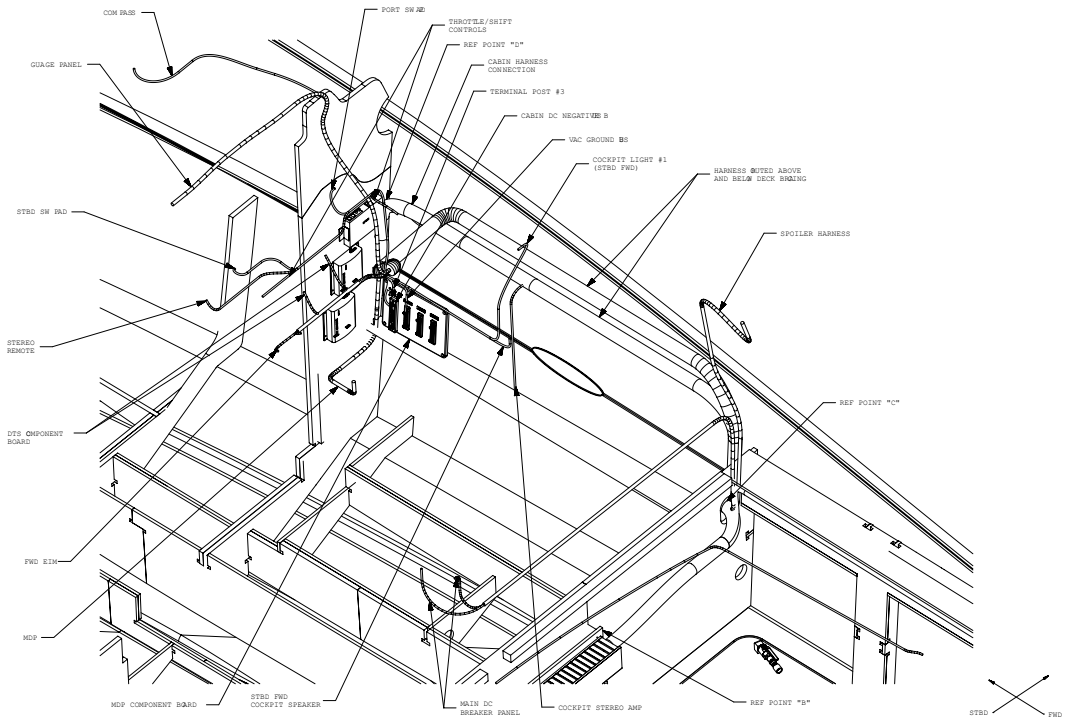

BILGE HARNESS
DRAWING NO. 09-802 (4 OF 6)
(FIG. 47.2)

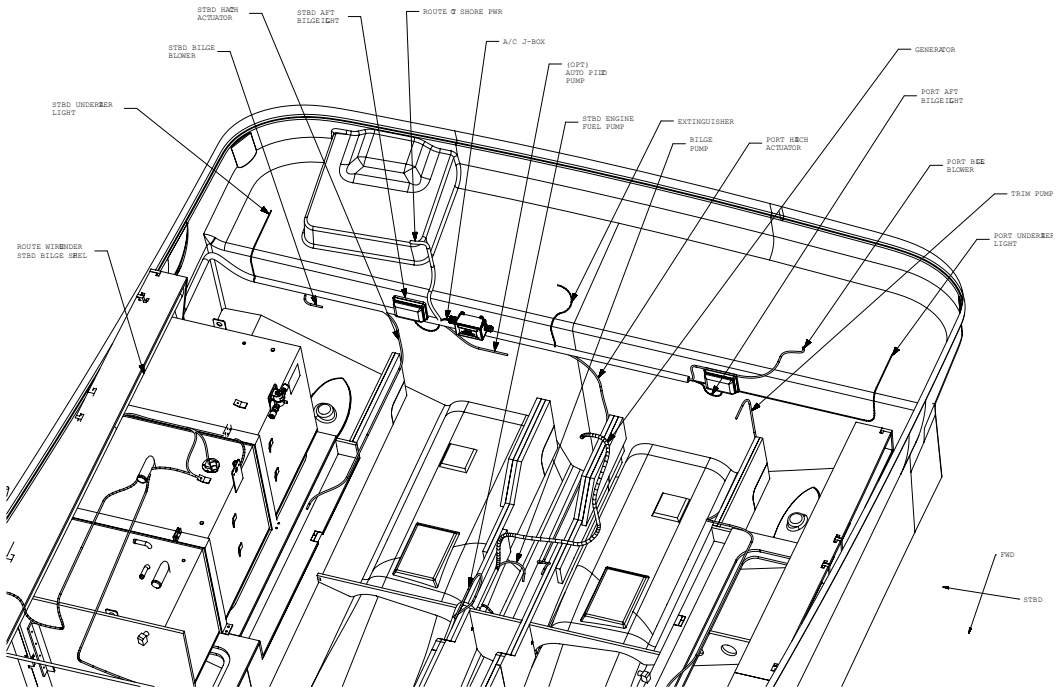

Warning:
DO NOT attempt to work on the electrical system of this boat without professional assistance.

BILGE HARNESS
DRAWING NO. 09-802 (5 OF 6)
(FIG. 48.1)

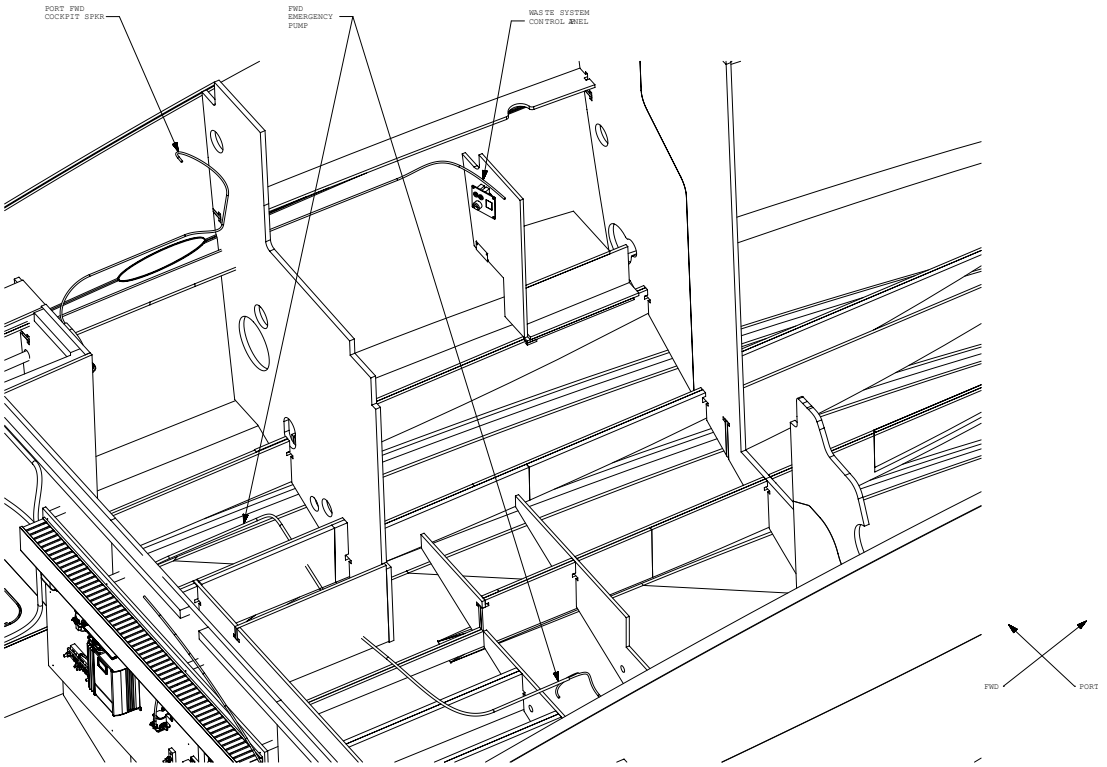

BILGE HARNESS
DRAWING NO. 09-802 (6 OF 6)
(FIG. 48.2)

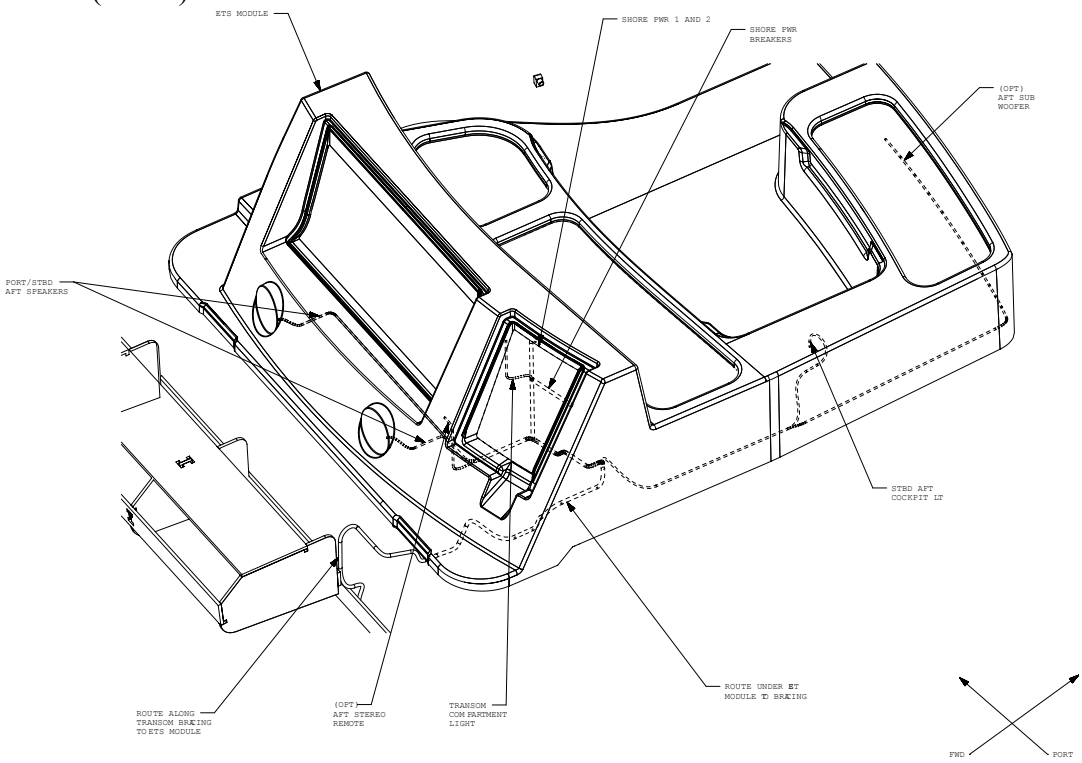

Warning:
DO NOT attempt to work on the electrical system of this boat without professional assistance.

CABIN HARNESS
DRAWING NO. 09-811 (1 OF 2)
(FIG. 49.1)

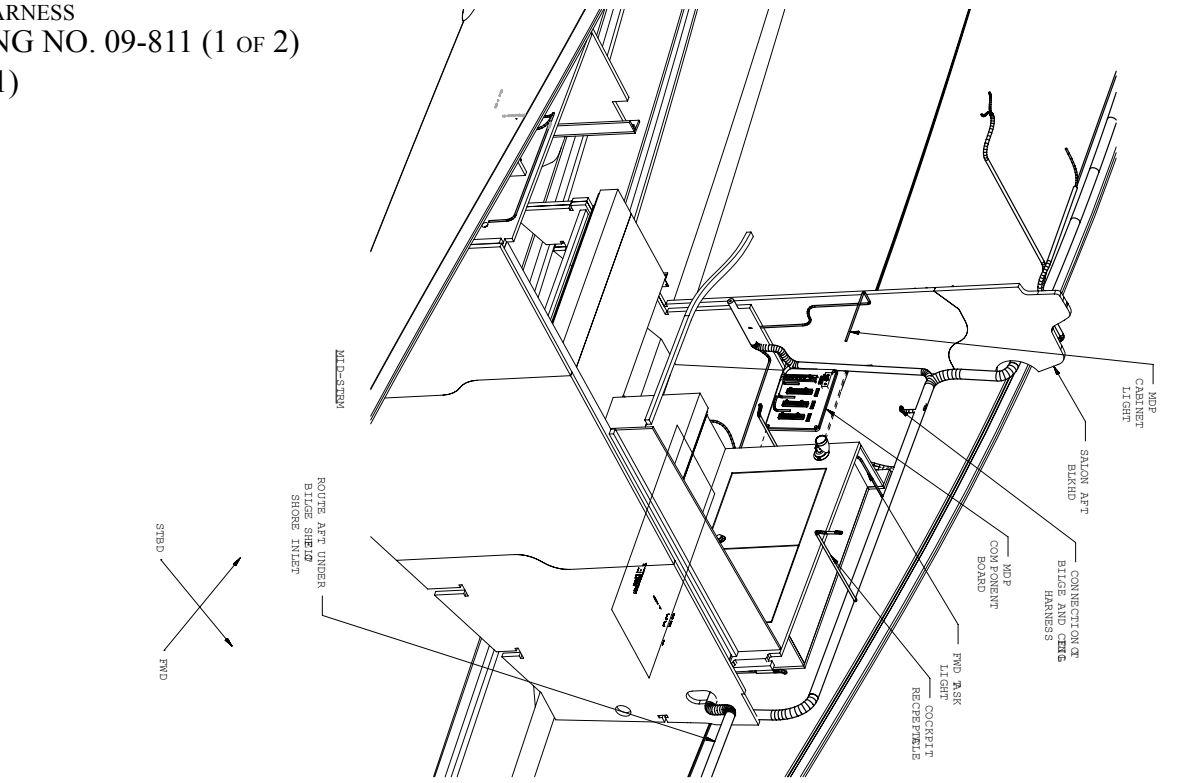

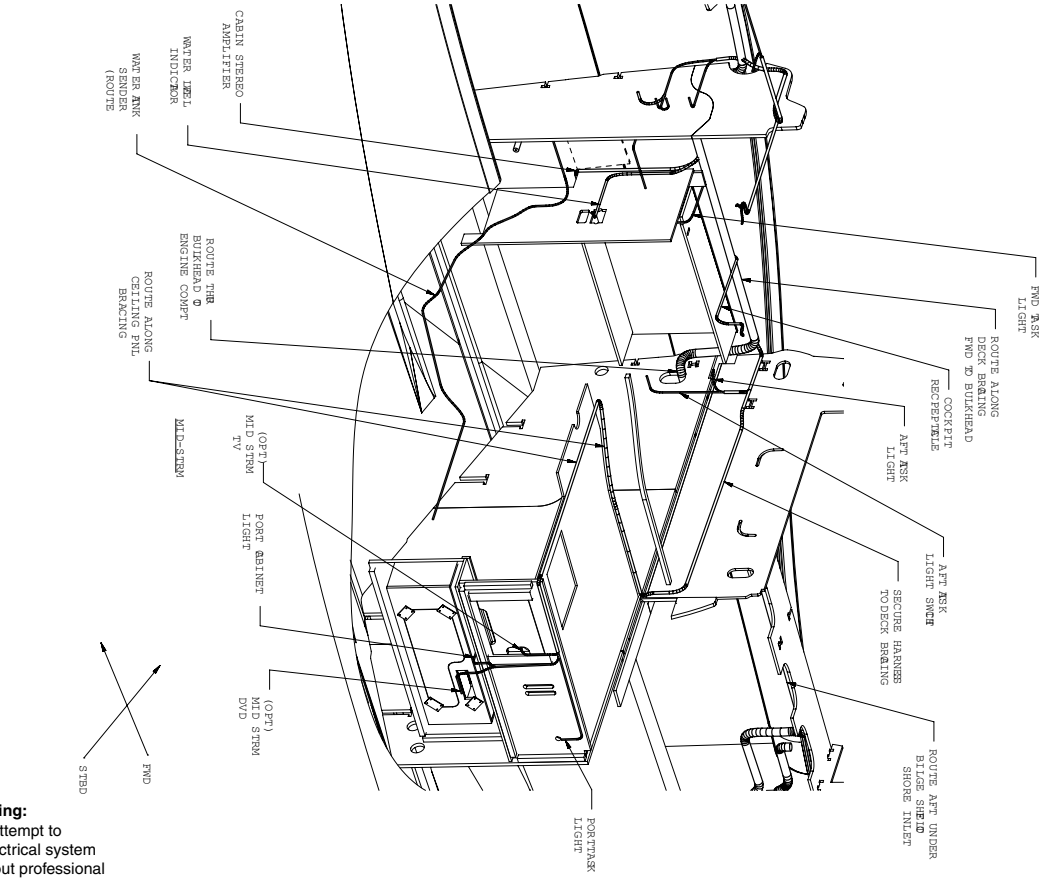

Warning:
DO NOT attempt to work on the electrical system of this boat without professional assistance.

CABIN HARNESS
DRAWING NO. 09-811 (2 OF 2)
(FIG. 50.1)

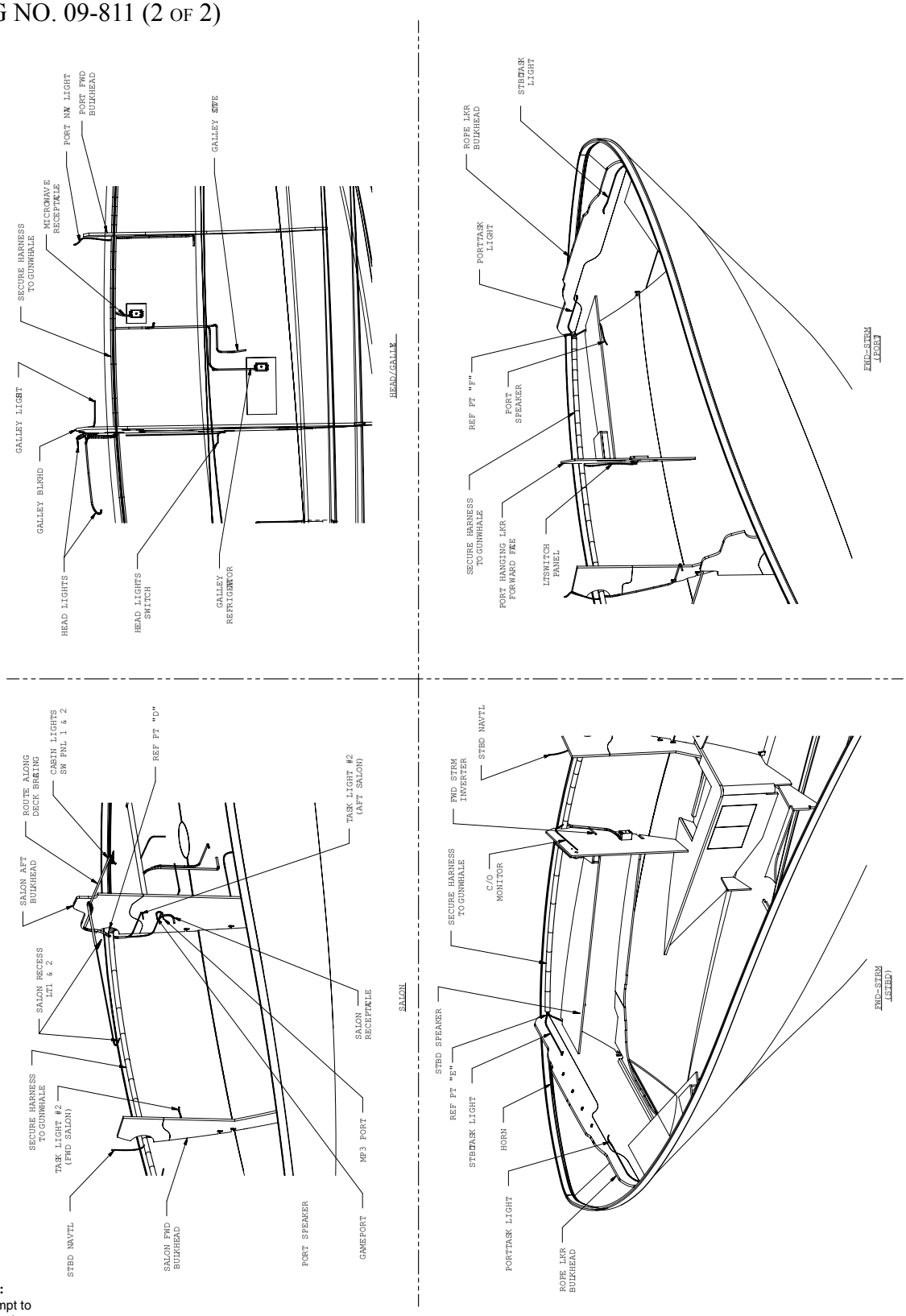

Warning:
DO NOT attempt to work on the electrical system of this boat without professional assistance.

CEILING HARNESS
DRAWING NO. 09-813
(FIG. 51.1)

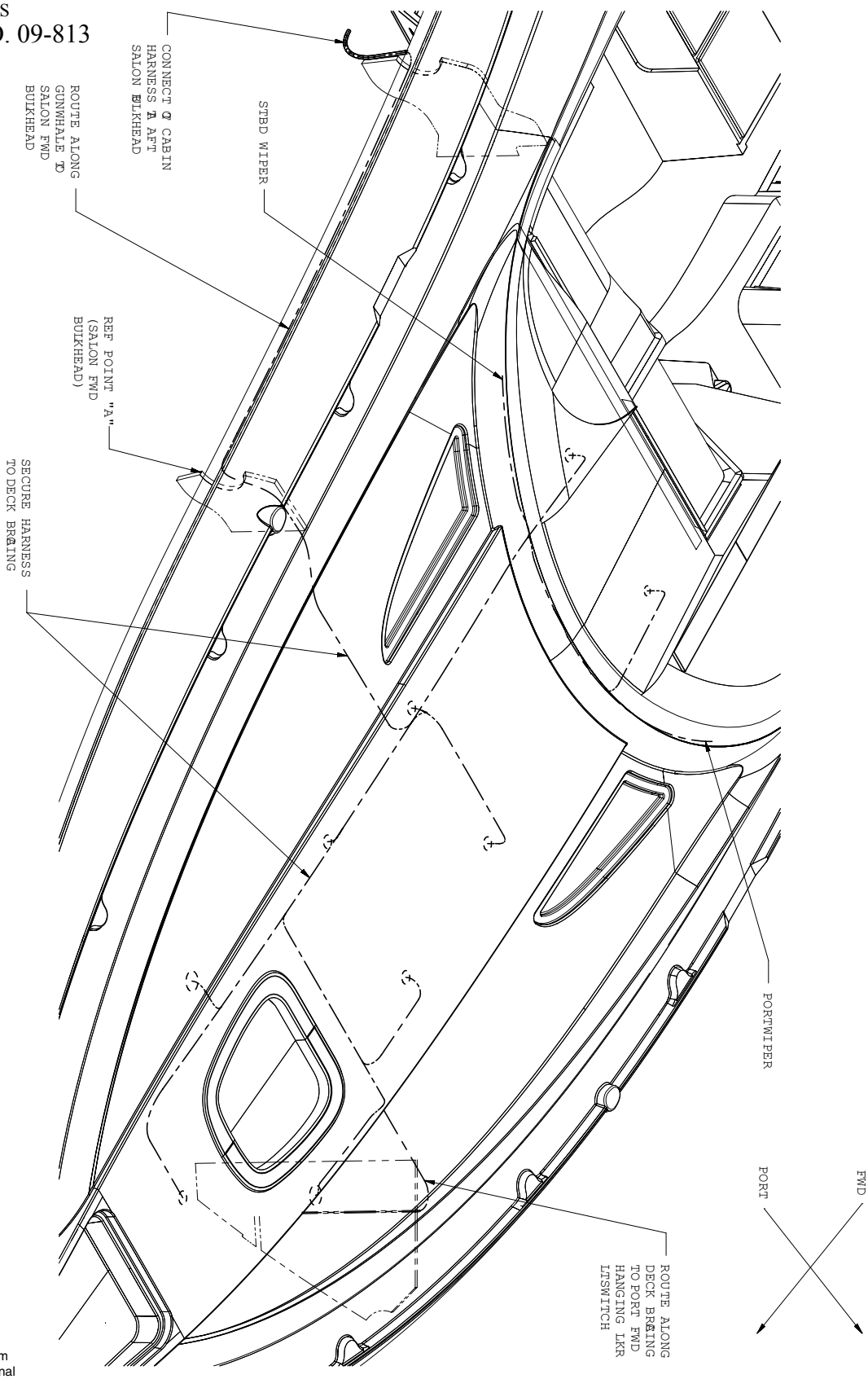

Warning:
DO NOT attempt to work on the electrical system of this boat without professional assistance.

GENERATOR HARNESS (STERN DRIVE)
DRAWING NO. 09-828
(FIG. 52.1)

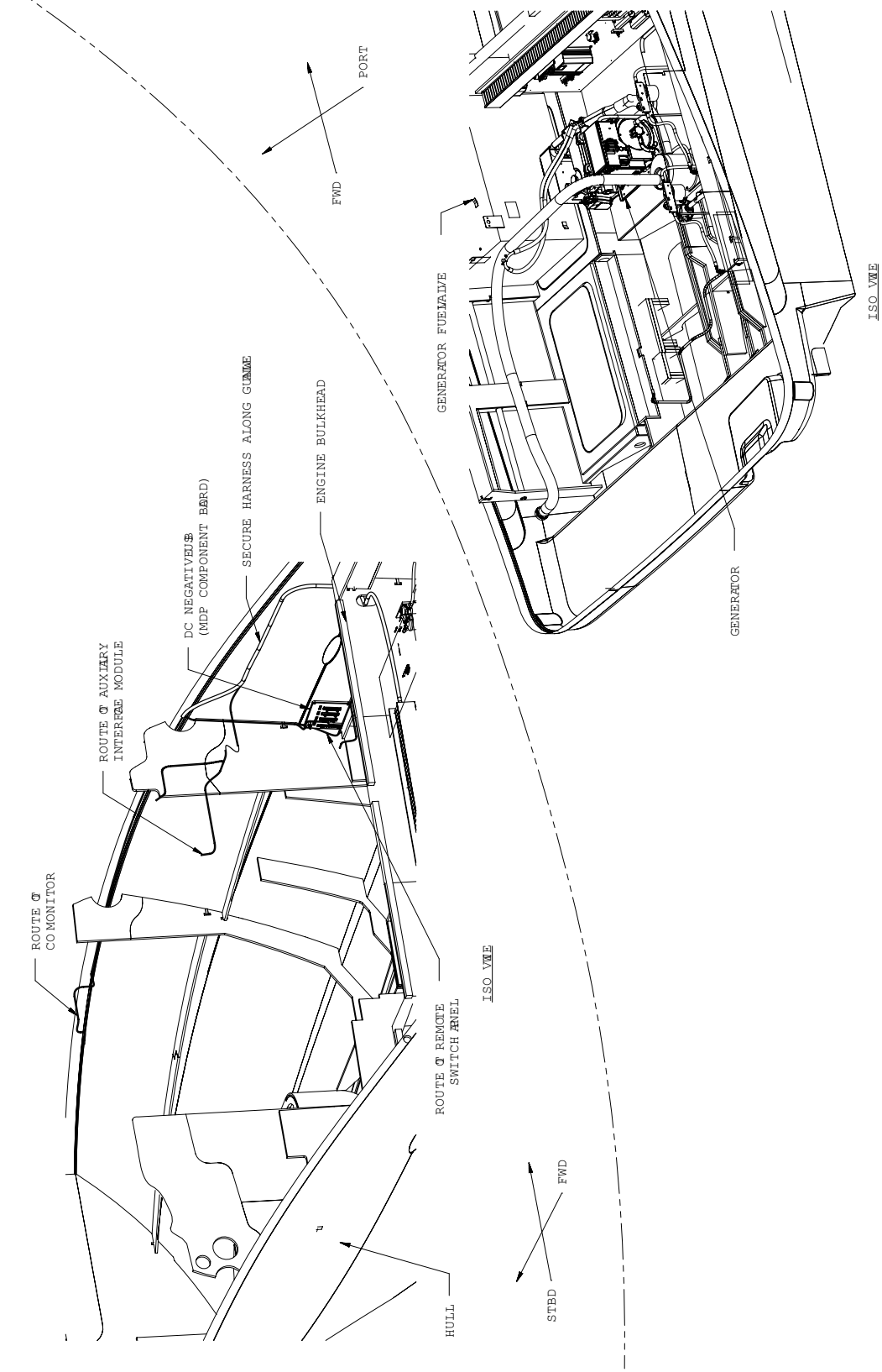

Warning:
DO NOT attempt to work on the electrical system of this boat without professional assistance.

GENERATOR HARNESS (V-DRIVE)
DRAWING NO. 09-829
(FIG. 53.1)

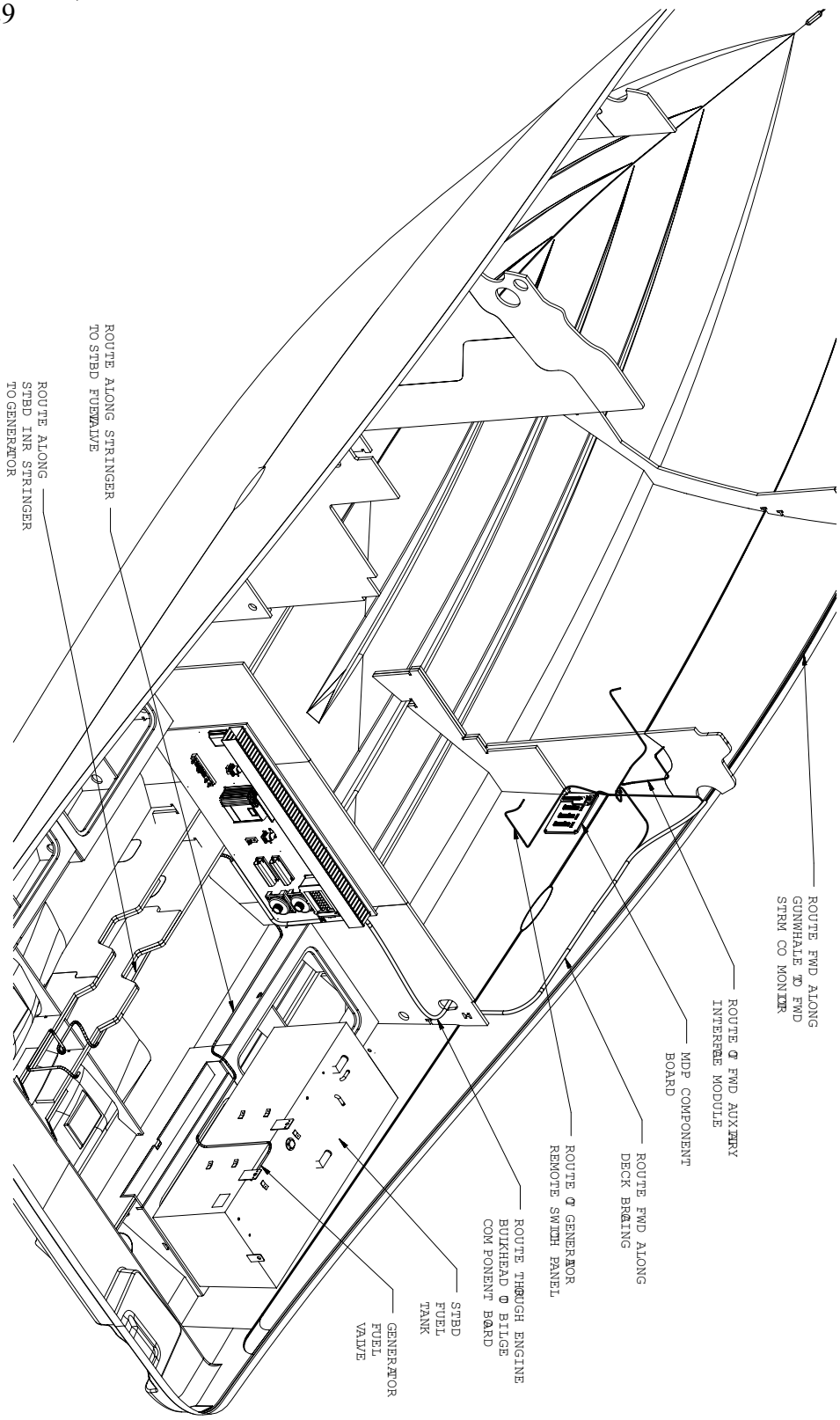

Warning:
DO NOT attempt to work on the electrical system of this boat without professional assistance.

CEILING HARNESS
DRAWING NO. 09-831
(FIG. 54.1)

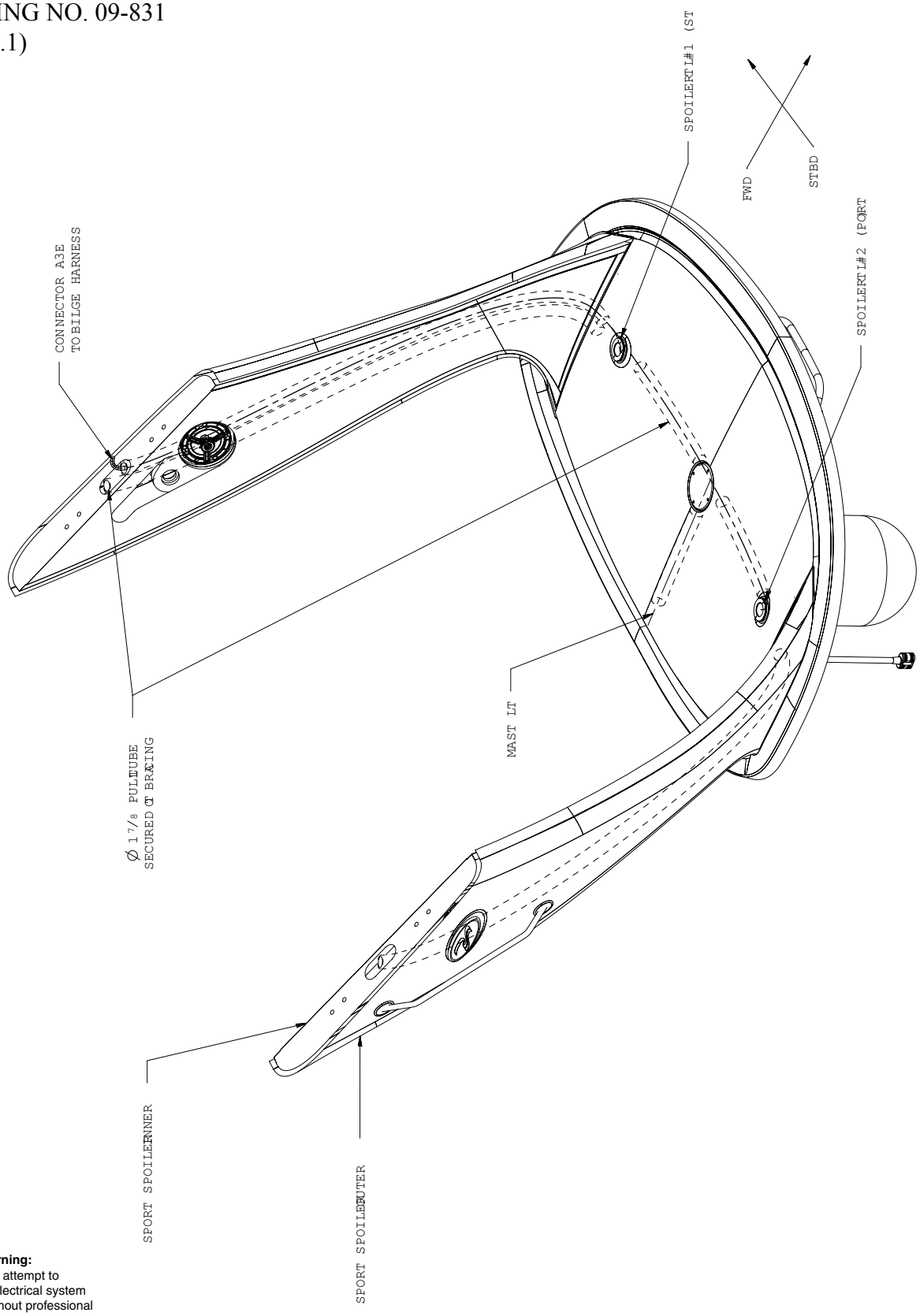

Warning:
DO NOT attempt to work on the electrical system of this boat without professional assistance.

STEREO HARNESS (PREMIUM OPTION)
DRAWING NO. 09-833
(FIG. 55.1)

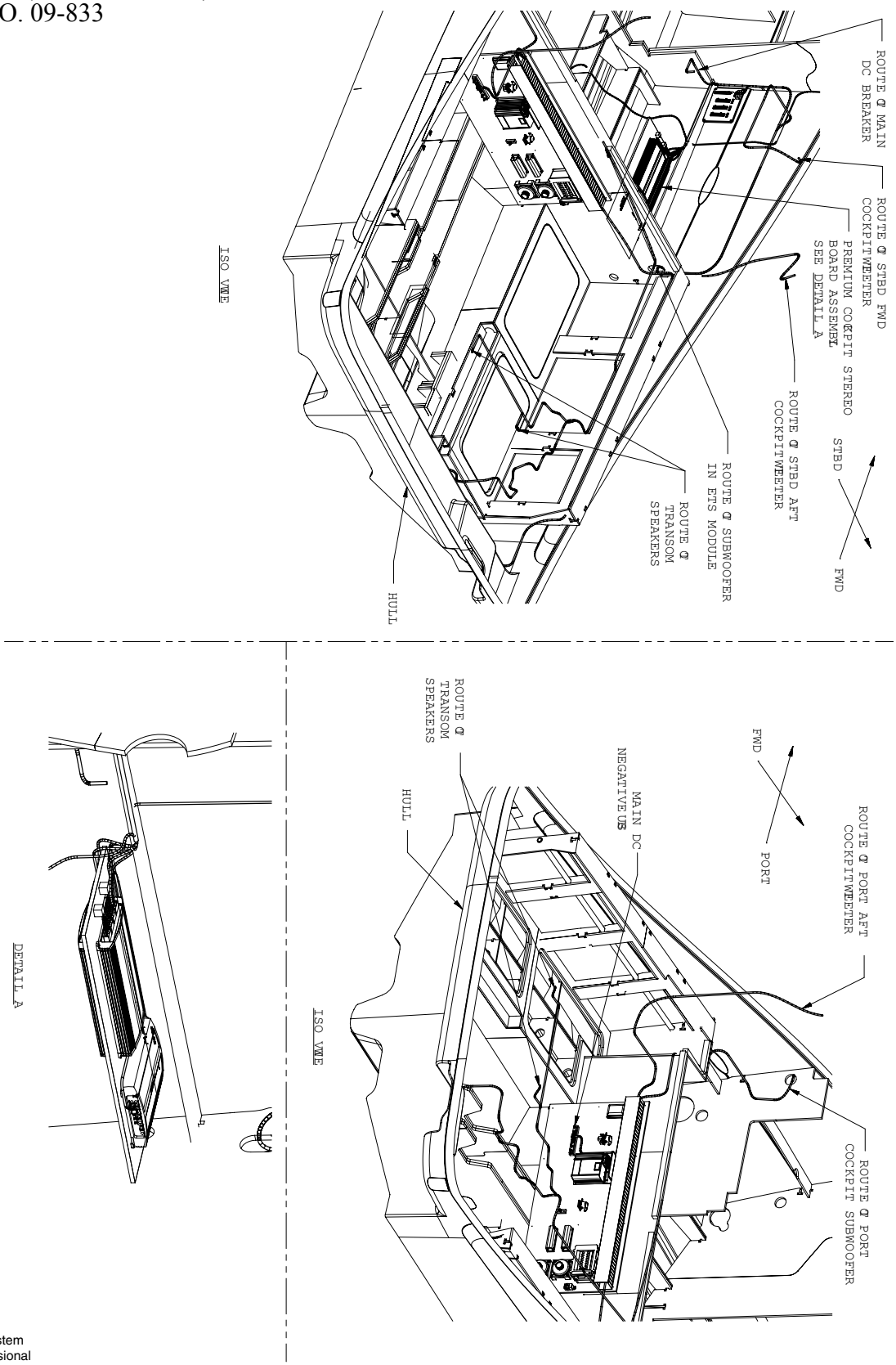

Warning:
DO NOT attempt to work on the electrical system of this boat without professional assistance.

WINDLASS HARNESS
DRAWING NO. 09-835
(FIG. 56.1)

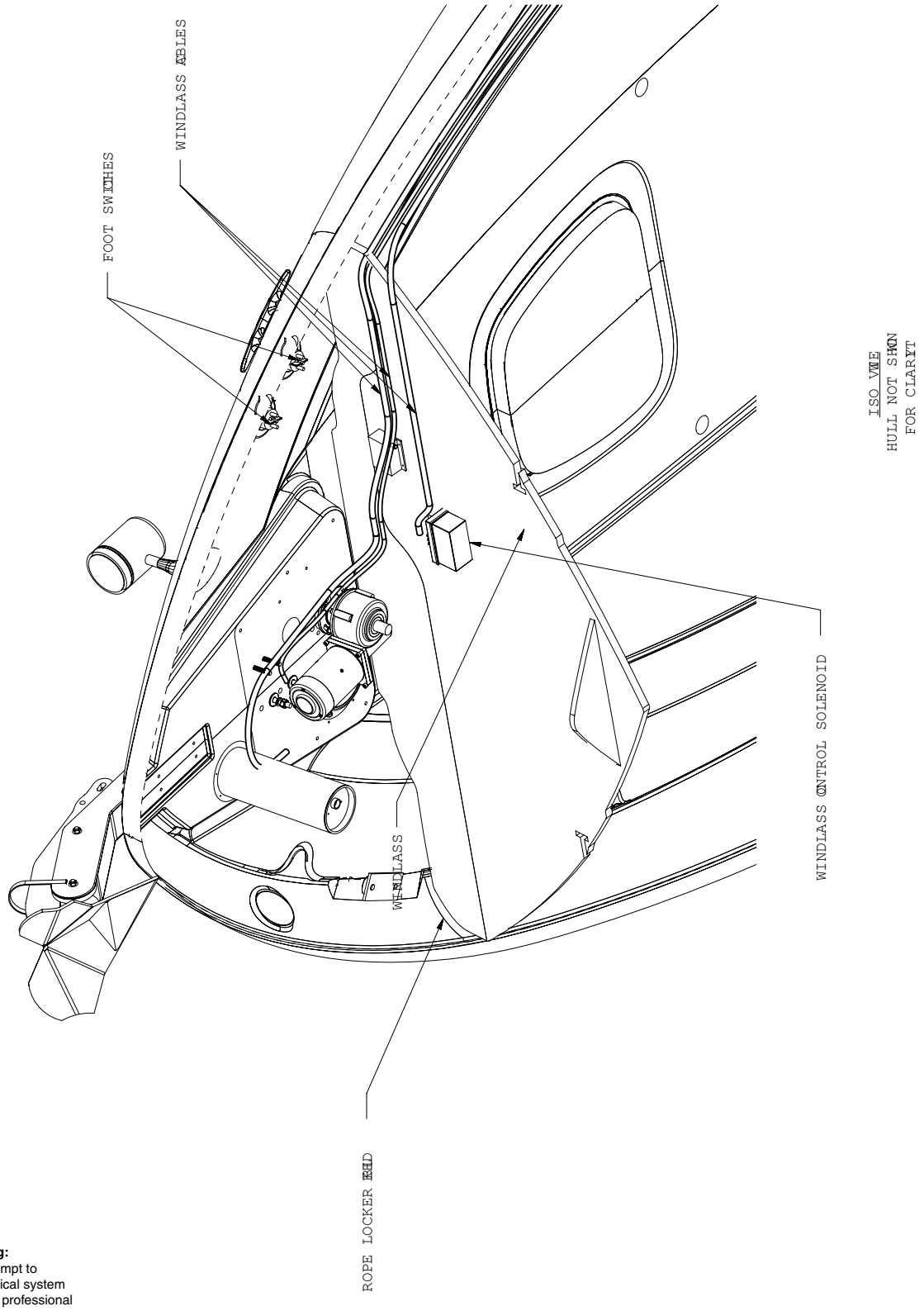

Warning:
DO NOT attempt to work on the electrical system of this boat without professional assistance.

INDEX

B

Bilge
- Layout....14

Builder's Plate....1

C

Cabin Layout....12
Canvas....19
Certifications
- CE (Common European) mark....vii
- NMMA (National Marine Manufacturers Assoc.) .vii

Clearances....6

D

Deck Layout....11
Dimensions....6

E

Electrical Schematics....19
Entertainment System....19

F

Fire Extinguishing System....17
Fuel System....17

H

Helm, Gauges, and Switches Layout....9
Hull
- Identification Number (HIN).... vi
- Through-Hull Cutouts....7

L

Load Capacity....1

N

Navigation and Anchor Lights....13

P

Passenger Locations....1

S

Safety Labels....2

W

Warranties.... vi, viii
Water System....17

This publication does not contain component or accessory manuals. Please visit www.searay.com for a complete library of all Sea Ray Owner's and Accessory Manuals

NOTES