Owner's Manual

Pachanga 22®

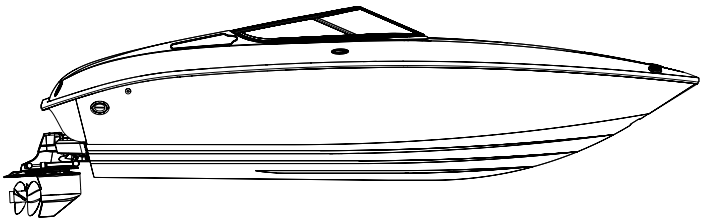

Manual Part Number: MRP 2029313

WELCOME

Congratulations on becoming the new owner of a Sea Ray® Boat, the world's most prestigious manufacturer of boats. We welcome you into our worldwide and ever-expanding family of boating enthusiasts.

This Owner's Information Packet, should be kept on board your Sea Ray®, and will provide important information about features of your boat.

For years of trouble-free boating, take the time to carefully review the information in this package and really get to know your boat. **Have everyone who will operate your boat read the Owner's Manual.**

The Owner's Information Packet contains the following:

- **Sea Ray® Owner's Manual**

The Sea Ray Owner's Manual contains important operating and safety information, as well as reminding you about your responsibilities as a boat owner/operator.

- **Model Specific Owner's Manual**

The Model Specific manual contains information specific to your model.

- **Original Equipment Manufacturer (OEM) Information**

The OEM Information of your Owner's Information Packet contains information provided by the individual systems manufacturers of equipment installed on your boat. Examples include the engine, engine control and electronics equipment. Throughout the Owner's Manual you will be referred to information provided by manufacturers of specific systems.

For a complete library of all Sea Ray manuals including owners, systems, accessories, and options please visit www.searay.com. There you will be able to view all Sea Ray manuals and any items that are not included in this manual.

Because your purchase represents a substantial investment, we know you will want to take the necessary measures to protect its value. We have outlined a program for proper operation, periodic maintenance and safety inspections. We urge you to follow these recommendations. If you have questions which are not fully covered by the Owner's Information Package, please consult your authorized Sea Ray® Boats dealer for assistance.

Thank You For Selecting A Sea Ray®!
Bon Voyage

Please visit www.searay.com for a complete library of all Sea Ray Owner's and Accessory Manuals.

Information in this publication is based upon the latest product specifications available at printing. Sea Ray® Boats, Inc. reserves the right to make changes at any time, without notice, in the colors, equipment, specifications, materials and prices of all models, or to discontinue models. Should changes in production models be made, Sea Ray® is not obligated to make similar changes or modifications to models sold prior to the date of such changes.

Printed in the U.S.A. July 2010
© Sea Ray Boats, Inc. • A Brunswick Company

Sea Ray Boats, Inc. 2600 Sea Ray Blvd., Knoxville, TN 37914

Note: Not all accessories shown in pictures or described herein are standard equipment or even available as options.

The following are registered trademarks of the Brunswick Corporation: Sea Ray® & The SR Wave Logo

Table of Contents

Introduction v

1. This Manual v
2. Your Responsibilities v
3. Sources of Information v
4. Dealer Responsibilities vi
5. Warranties vi
6. Hull Identification Number (HIN) vi
7. Manufacturer's Certification vii
8. Service, Parts and Repair for Your Boat vii
9. Warranty Information vii

Pachanga® 22 Owners Manual 1

1. Load Capacity 1
2. Passenger Locations 1
3. Safety Label Locations 2
4. Basic Boat Dimensions and Clearances 5
5. Function and Location of Through-Hull Cutouts 6
6. Helm, Gauge & Switch Layout 7
7. Deck Layout 9
8. Cleats 10
9. Navigation and Anchor Lights 10
10. Lighting 10
11. Bilge Layout 11
12. Fire Extinguishing System 12
13. Fuel System 12
14. Entertainment System 13
15. Electrical Schematics 13

Index I

Introduction

1. This Manual

The material here and in the rest of the Owner's Information Packet:

- Gives you basic safety information;
- Describes the fundamentals of boat use;
- Describes the features of your boat;
- Describes the equipment on your boat;
- Contains service and maintenance information.

You must learn to safely operate this boat as well as read, understand and use the information contained in this package.

What these manuals do not give you is a course in boating safety, or how to navigate, anchor, or dock your boat. Operating a power boat safely requires more skills, knowledge, and awareness than is necessary for a car or truck.

2. Your Responsibilities

For your safety, the safety of your passengers, other boaters and people in the water, you must:

- Take a boating safety course;
- Get instruction in the safe and proper handling of your boat;
- Understand and follow the "Rules of the Road";
- Learn how to navigate;
- Register:

  You must register this boat in the state where it will be used most frequently, many states require additional registration when an out-of-state boat is used within their boundaries.

  Contact state boating authorities or any marine dealer for registration requirements.

3. Sources of Information

In North America, contact one of the following for boating courses:

- U.S. Coast Guard Auxiliary
- U.S. Power Squadron
- Canadian Power and Sail Squadrons
- Red Cross
- State Boating Offices
- Yacht Club

Contact your dealer or the Boat/U.S. Foundation at:

1-800-336-2628

Outside of North America, contact your boat dealer and/or your governmental boating agency for assistance.

A book that provides a comprehensive background in boating is **Chapman - *Piloting, Seamanship and Small Boat Handling***, by Elbert S. Maloney, published by Hearst Marine.

4. Dealer Responsibilities

In addition to a predelivery check and service of the boat, your dealer is to give you:

- A description and demonstration of the safety systems, features, instruments and controls on your boat;
- An orientation in the general operation of your boat;
- An "In Service Check List" form completed by you and the dealer after your inspection of the boat;
- A review of all warranty information and how to obtain warranty service;
- The Owner Information Package.

If you do not receive all of these materials, or have any questions, contact your dealer.

5. Warranties

Your boat comes with several warranties. Each component and/or system on your boat has its own warranty that will be found with the specific information and manual for that component. These are included with your Owner's Manual Packet. The Sea Ray® Express Limited Warranty is on the warranty information sheet and in this manual. Please locate and read the individual warranties.

6. Hull Identification Number (HIN)

The "Hull Identification Number", (Fig. ix.1) will be located either on the starboard side of the transom, or on the aft, starboard side of the gunwale, and is your boat's most important identifying factor. This number must be included in all correspondence and orders. Failure to include it creates delays. Also of vital importance is the engine serial number and part number when writing about or ordering parts for your engine. Refer to the Engine Operator's Manual for location of engine serial number and record it for future reference.

Hull Identification Number Location (Fig. ix.1)

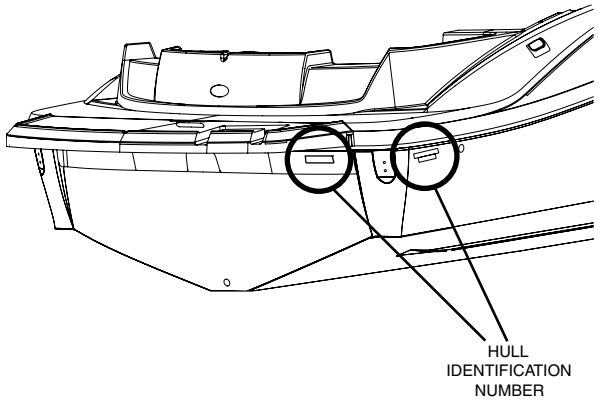

7. Manufacturer's Certification

As a boat manufacturer, Sea Ray® builds their products to guidelines established under the Federal Boat Safety Act of 1971. The Act is promulgated by the United States Coast Guard who has authority to enforce these laws on boat manufacturers that sell products in the United States. Sea Ray® ensures that all of its products comply with these laws.

The National Marine Manufacturers Association (NMMA) provides Sea Ray® with a third party certification. The NMMA is an organization that represents the marine industry and assists manufacturers, boat dealers, marinas, repair yards and component suppliers in areas of legislation, environmental concerns, marine business growth and state and federal government agency interaction. The third party certification that Sea Ray® participates in, uses the well known Standards and Recommended Practices of the American Boat and Yacht Council (ABYC).

Sea Ray® Boats participates extensively in the American Boat and Yacht Council which is a nonprofit organization that develops and publishes voluntary standards and recommended practices for boat and equipment design, construction, service and repair. We utilize all applicable ABYC standards in the construction of your Sea Ray® boat.

Finally, Sea Ray® sells their products world wide and as such must conform to the various rules and regulations required by other countries. Most notably, are the ISO standards in Europe which require the application of the Common European (CE) mark. This mark, much like the NMMA certification here in the US, gives you the boat owner specific information concerning your craft.

8. Service, Parts and Repair for Your Boat

When your boat needs service, parts or repair, take it to an authorized Sea Ray® dealer. To find a dealer in your area contact Sea Ray® via the internet at www.searay.com (international customers please visit international.searay.com).

To find repair and parts facilities for the equipment installed on your boat, refer to the section or manual for that component.

If a problem is not handled to your satisfaction:

1. Discuss any warranty-related problems directly with the service manager of the dealership or your sales person. Give the dealer an opportunity to help the service department resolve the matter for you.
2. If a problem arises that has not been resolved to your satisfaction by your dealer, contact Sea Ray® via the internet at www.searay.com and the appropriate customer service information will be provided to you.

9. Warranty Information

You will find information regarding the Sea Ray® warranty following the introduction. A warranty information card is also included in the owner information packet. If for some reason this information missing, contact your Sea Ray® dealer.

About Your Limited Warranty

Sea Ray® offers an express Limited Warranty on each new Sea Ray® purchased through an authorized Sea Ray® dealer. A copy of the Limited Warranty was included in your owner's manual package. If for any reason, you did not receive a copy of the Limited Warranty, please contact your local dealer for a replacement copy. This is a summary of several provisions of the Limited Warranty. Please read the Limited Warranty, which is the controlling document.

Under the Limited Warranty, Sea Ray® covers: (a) structural fiberglass deck or hull defects which occur within five (5) years of the date of delivery; (b) parts founds to be defective in factory material or workmanship within one (1) year of the date of delivery; (c) laminate blisters resulting from defects in factory material or workmanship for five (5) years on a prorated basis.

Sea Ray®'s obligation under the Limited Warranty is limited to repair or replacement of parts that are judged defective by Sea Ray® and does not include transportation, haul out, or other expenses. The foregoing is the **sole and exclusive** remedy provided by Sea Ray®.

The Limited Warranty does not cover engines, stern drives, controls, propellers, batteries, trailers, or other equipment or accessories carrying their own individual warranties, nor does the Limited Warranty cover engines, parts or accessories not installed by Sea Ray®. The Limited Warranty does not cover cosmetic gel coat finish. Boats used for commercial purpose are excluded from coverage. **See the Sea Ray® Limited Warranty for other exclusions.**

SEA RAY® EXPRESSLY DISCLAIMS THE IMPLIED WARRANTIES OF MERCHANTABILITY AND FITNESS. NEITHER SEA RAY® NOR THE SELLING DEALER SHALL HAVE ANY RESPONSIBILITY FOR LOSS OF USE OF THE BOAT, LOSS OF TIME, INCONVENIENCE, COMMERCIAL LOSS OR CONSEQUENTIAL DAMAGES.

The unexpired term of the limited warranty may be transferred to a subsequent owner upon the new owner's request, except this limited warranty will not transfer to any subsequent owner of a boat which has been salvaged or resold after declaration of a total loss or a constructive total loss, i.e., the cost of repair exceeds the value of the boat. The new owner can submit this request, free of charge, via the searay.com website or through a local authorized Sea Ray Dealer where processing fees may be applied. Sea Ray reserves the right to reject any warranty transfer request for a boat that has been damaged, neglected, or otherwise previously excluded from warranty..

Thank you for your decision to buy a Sea Ray®.

The Sea Ray® Limited Warranty is subject to change at any time at Sea Ray's discretion. The information contained herein is general information about the Limited Warranty for the owner's general knowledge, but does not alter or amend the terms of the Limited Warranty.

1. LOAD CAPACITY

Refer to the General Information Manual for a detailed explanation of **Load Capacity**.

⚠ DANGER

Never carry more weight or passengers than indicated on the certification plate, regardless of weather or water conditions.

The boat can capsize, swamp or sink.

BUILDER'S PLATE (DOMESTIC)
(FIG. 1.1)

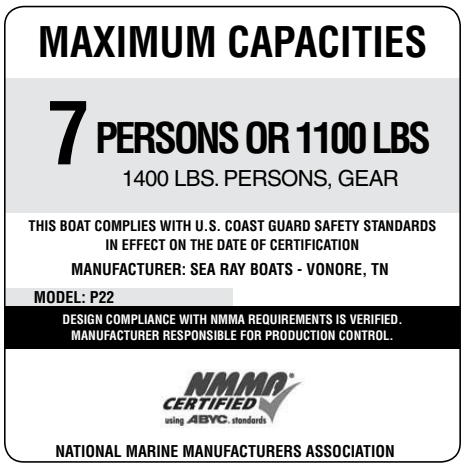

BUILDER'S PLATE (INTERNATIONAL)
(FIG. 1.2)

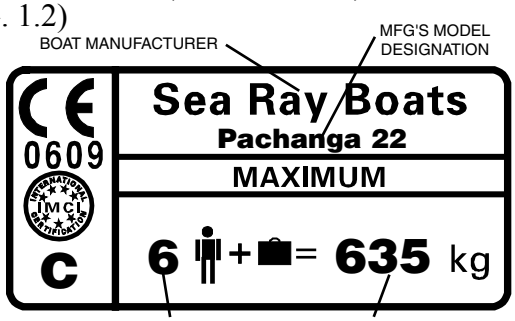

⚠ WARNING

Wet decks are slippery.

You can be seriously injured if you slip and fall.

Wear slip resistant footwear secured to your feet and hold on to rails or boat structure.

2. PASSENGER LOCATIONS

Refer to the General Information Manual for a detailed explanation of **Passenger Locations**.

⚠ WARNING

Boat motion can be erratic.

You can fall overboard or be injured by hitting something in or on the boat.

All persons must be in cockpit area or cabin and be prepared for sudden boat movement.

Use front or bow deck area only during anchoring, mooring or emergencies.

PASSENGER LOCATIONS
(FIG. 1.3)

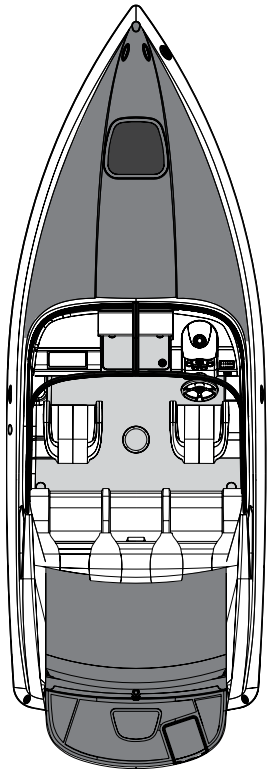

ACCOMMODATION DECK
(DECK AREA INTENDED FOR OCCUPATION DURING NORMAL OPERATION)

DO NOT STAND OR WALK ON THIS AREA WHILE UNDERWAY.

DO NOT STAND OR WALK ON THIS AREA.

⚠ DANGER

Rotating propellers can injure or kill you.

Shut off engine when persons are in water near boat, or on swim platform or ladder.

⚠ WARNING

Rear facing transom seats MUST NOT be used while engine is running or boat is moving.

3. SAFETY LABEL LOCATIONS

SAFETY LABEL LOCATIONS
(FIG. 2.1)

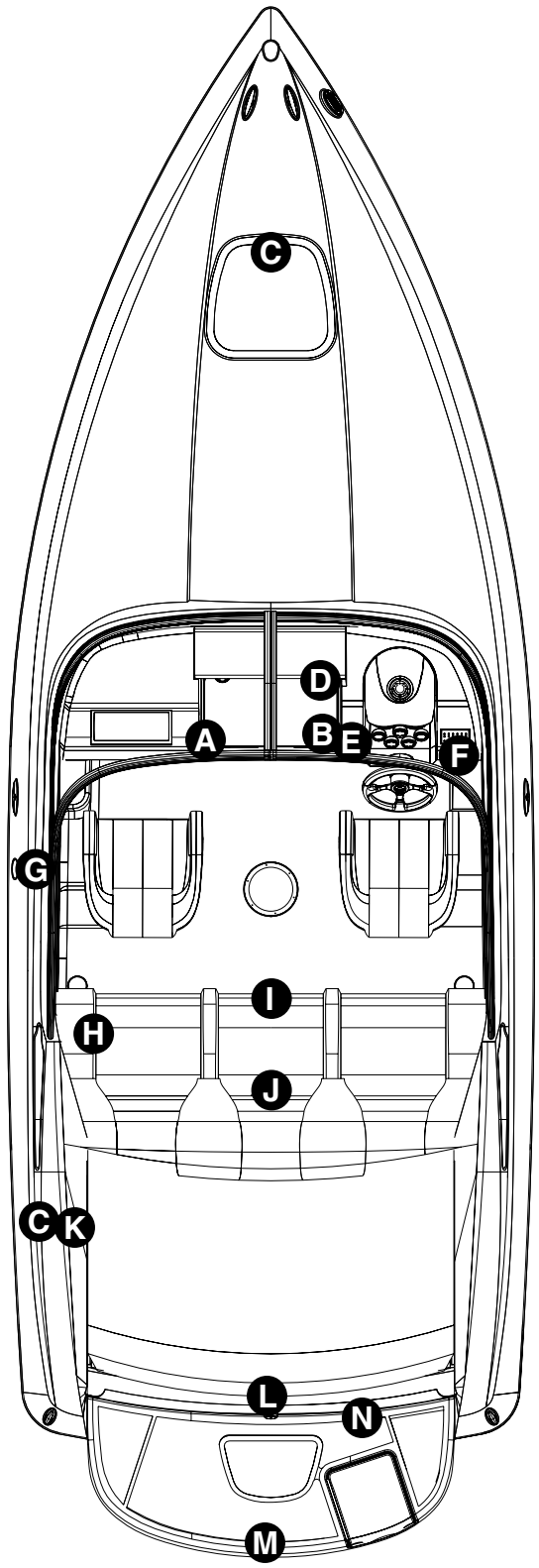

A

THE UNITED STATES COAST GUARD (USCG) RECOMMENDS THAT ALL OCCUPANTS WEAR APPROVED PERSONAL FLOATATION DEVICES (PFDs).

DANGER

PROPELLER(S) MAY CAUSE SERIOUS INJURY OR DEATH.
Shut-off engine(s) when near swimmers, prior to using sunpads, swim platform, or boarding ladder.

WARNING

AVOID COLLISIONS-
- Maintain lookout as required by the "Rules of the Road"
- Visibility can be limited by high boat trim angles, persons, gear, weather and atmospheric conditions.
- At all times proceed at a safe speed, in order to take proper and effective action to avoid hazardous conditions.

SUCH ISSUES ARE UNDER THE CONTROL OF THE OPERATOR!

AVOID SKI LINES AND TOW ROPES-
Ski lines and tow ropes can backlash into the cockpit when released.

CAUTION

AVOID INHALATION OF TOXIC FUMES-
If fire extinguishing system discharge occurs, ventilate space before entering.

MRP # 1895601

WARNING

Carbon monoxide (CO) can cause brain damage or death.

Engine and generator exhaust contains odorless and colorless carbon monoxide gas.

Signs of carbon monoxide poisoning include nausea, headache, dizziness, drowsiness, and lack of consciousness.

Get fresh air if anyone shows signs of carbon monoxide poisoning.

See Owner's Manual for information regarding carbon monoxide poisoning.

NW-204-05

B

MAXIMUM CAPACITIES

7 PERSONS OR 1100 LBS

1400 LBS. PERSONS, GEAR

THIS BOAT COMPLIES WITH U.S. COAST GUARD SAFETY STANDARDS IN EFFECT ON THE DATE OF CERTIFICATION

MANUFACTURER: SEA RAY BOATS - VONORE, TN

MODEL: P22

DESIGN COMPLIANCE WITH NMMA REQUIREMENTS IS VERIFIED. MANUFACTURER RESPONSIBLE FOR PRODUCTION CONTROL.

NMMA CERTIFIED using ABYC standards

NATIONAL MARINE MANUFACTURERS ASSOCIATION

CE 0609 IMCI C

Sea Ray Boats
Pachanga 22
MAXIMUM
6 + = 635 kg

THIS TAG INSTALLED WHEN BOAT IS ORDERED WITH CE INTERNATIONAL OPTION

SAFETY LABEL LOCATIONS (CONTINUED)

SAFETY LABEL LOCATIONS (FIG. 3.1)

C

DANGER

DO NOT STAND OR WALK ON THIS AREA SERIOUS INJURY COULD RESULT.

MRP # 1745515 SR-7216

D

WARNING

DOOR MUST BE SECURED WHILE VESSEL IS UNDERWAY

MRP 1743507 SR-7313

WARNING

RUNNING BOAT WITH DOOR OPEN COULD INDUCE EXHAUST FUMES INTO CABIN. SEE OWNER'S MANUAL FOR INSTRUCTIONS CONCERNING CARBON MONOXIDE.

MRP # 1743548 SR-7285

E

WARNING

VISIBILITY FROM THE SEATED POSITION AT THIS HELM STATION IS LIMITED. AVOID SERIOUS INJURY OR DEATH FROM COLLISIONS. OPERATION FROM A STANDING POSITION MAY BE NECESSARY TO MAINTAIN LOOKOUT AS REQUIRED BY RULES OF THE ROAD. READ OWNERS MANUAL.

MRP 1743528 BCM-714

F

WARNING

MANEUVERABILITY ABOVE 45 MPH IS LIMITED. SUDDEN TURNS MAY CAUSE LOSS OF CONTROL. READ OWNERS MANUAL!

MRP # 1743523 BMC-11

G

WARNING

Gasoline vapors are explosive! Avoid serious injury or death from fire or explosion, resulting from leaking fuel. Inspect system for leaks at least once a year.

The use of fuels containing ethanol higher than 10% (E-10) can damage your engine or fuel system and will void the warranty. Never use (E-85).

Open flame appliances can ignite gasoline vapors causing death or injuries from the fire or explosion. Turn off all open flame appliances when refueling.

MRP 1948206 SR-7439

H

CAUTION

IF SWITCH IS TURNED OFF WHILE ENGINE IS RUNNING ALTERNATOR WILL BE DAMAGED.

MRP # 1746901 SR-7167

ON BATTERY SWITCH PANEL

I

FIRE PORT ACCESS UNDER KEEP CLEAR

MRP #1743499 SR-7125

J

WARNING

- IN CASE OF FIRE DO NOT OPEN ENGINE BOX OR COMPARTMENT
- SHUT DOWN ENGINES, GENERATOR AND BLOWERS.
- CONTINUOUSLY DISCHARGE ENTIRE CONTENTS OF HALON OR CO_2 PORTABLE FIRE EXTINGUISHER THROUGH PORT IMMEDIATELY.

MRP #1744762 SR-766

UNDER TRANSOM SEAT CUSHION. ONLY ON BOATS WITHOUT AN OPTIONAL AUTOMATIC FIRE SUPPRESSION SYSTEM

K

DANGER

FORE AND AFT SUN PADS SHOULD NOT BE USED WHEN VESSEL IS UNDER WAY.

MRP 1752374 SR-7140

L

WARNING

USE CAUTION WITH SKIER IN TOW AS TOW ROPE MAY BACKLASH INTO COCKPIT WHEN RELEASED

MRP 1745125 SR-7111

M

DANGER

TO AVOID RISK OF SERIOUS INJURY OR DEATH SHUT OFF ENGINE WHEN NEAR SWIMMERS OR PRIOR TO USING SWIM PLATFORM AND BOARDING LADDER.

MRP 1745519 SR-7214

N

DANGER

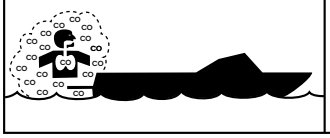

Carbon monoxide (CO) can cause brain damage or death.

Engine and generator exhaust contains odorless and colorless carbon monoxide gas.

Carbon monoxide will be around the back of the boat when engines or generators are running.

Move to fresh air, if you feel nausea, headache, dizziness, or drowsiness.

NW-206-05

WARNING

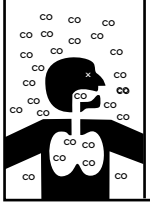

Carbon monoxide (CO) can cause brain damage or death.

Carbon monoxide can be present in the cabin.

Signs of carbon monoxide poisoning include nausea, headache, dizziness, drowsiness, and lack of consciousness.

Get fresh air if anyone shows signs of carbon monoxide poisoning.

Get fresh air is carbon monoxide detector alarm sounds.

Carbon monoxide detoctor must be functioning at all times.

NW-205-05

INSIDE OF CABIN DOOR

NOTICE

CHECK BATTERY CELL FLUID LEVEL APPROXIMATELY EVERY 4 WEEKS, AND MORE OFTEN IN SUMMER AND HOT ZONES.

MRP # 1746895 SR-7139

WARNING

LEAKING FUEL IS A FIRE AND EXPLOSION HAZARD. INSPECT SYSTEM REGULARLY. EXAMINE FUEL TANKS FOR LEAKS OR CORROSION AT LEAST ANNUALLY.

MRP 1745513 SR-7151

DANGER

STAY CLEAR OF MOVING PARTS WHILE ENGINE IS RUNNING.

MRP 1745512 SR-7149

UNDER SIDE OF ENGINE HATCH

SAFETY LABEL LOCATIONS (CONTINUED)

SAFETY LABEL LOCATIONS
(FIG. 4.1)

Save Our Seas

It is *illegal* to dump plastic trash anywhere into the ocean or navigable waters of the United States. Violation of these requirements may result in civil penalty up to $25,000, a fine of $50,000 and imprisonment for up to five years.

PLASTIC - Includes but is not limited to: plastic bags, styrofoam cups and lids, six-pack holders, stirrers, straws, milk jugs, egg cartons, synthetic fishing nets, ropes, lines, and bio or photo degradable plastics.

GARBAGE - Means paper, rags, glass, metal, crockery (generated in living spaces aboard the vessel-what we normally call trash), and all kinds of food, maintenance and cargo-associated waste.
"Garbage" does not include fresh fish or fish parts, dishwater, and gray water.

INSIDE 3 MILES

(and in U.S. Lakes, Rivers, Bays and Sounds)
PLASTICS
DUNNAGE, LINING AND PACKING MATERIALS THAT FLOAT
ANY GARBAGE EXCEPT DISHWATER/ GRAYWATER/FRESH FISH PARTS

3 TO 12 MILES

PLASTICS
DUNNAGE, LINNING AND PACKING MATERIALS THAT FLOAT
ANY GARBAGE NOT GROUND TO LESS THAN ONE SQUARE INCH

12 TO 25 MILES

PLASTICS
DUNNAGE, LINING AND PACKING MATERIALS THAT FLOAT

12 TO 25 MILES

PLASTICS

DUNNAGE- Material used to block and brace cargo, and is considered a cargo associated waste.

DISHWATER- Means the liquid residue from the manual or automatic washing of dishes and cooking utensils which, have been pre-cleaned to the extent that any food particles adhering to them would not normally interfere with the operation of automatic dishwashers.

GRAYWATER - Means drainage from a dishwasher, shower, laundry, bath, and washbasin, and does not include drainage from toilets, urinals, hospitals, and cargo spaces.

LOCATED ON UNDERSIDE OF ENGINE HATCH

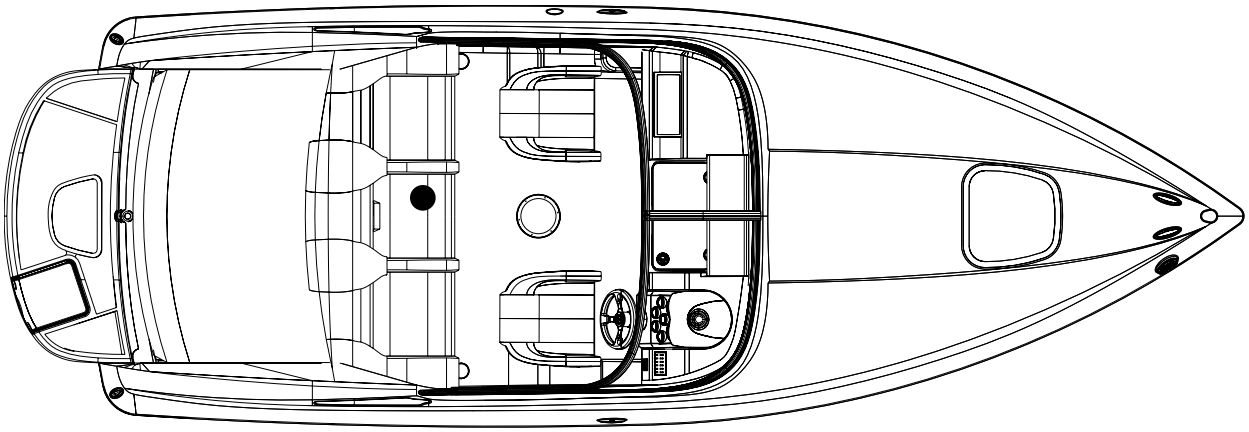

4. BASIC BOAT DIMENSIONS AND CLEARANCES

BOAT DIMENSIONS AND CLEARANCES
(FIG. 5.1)

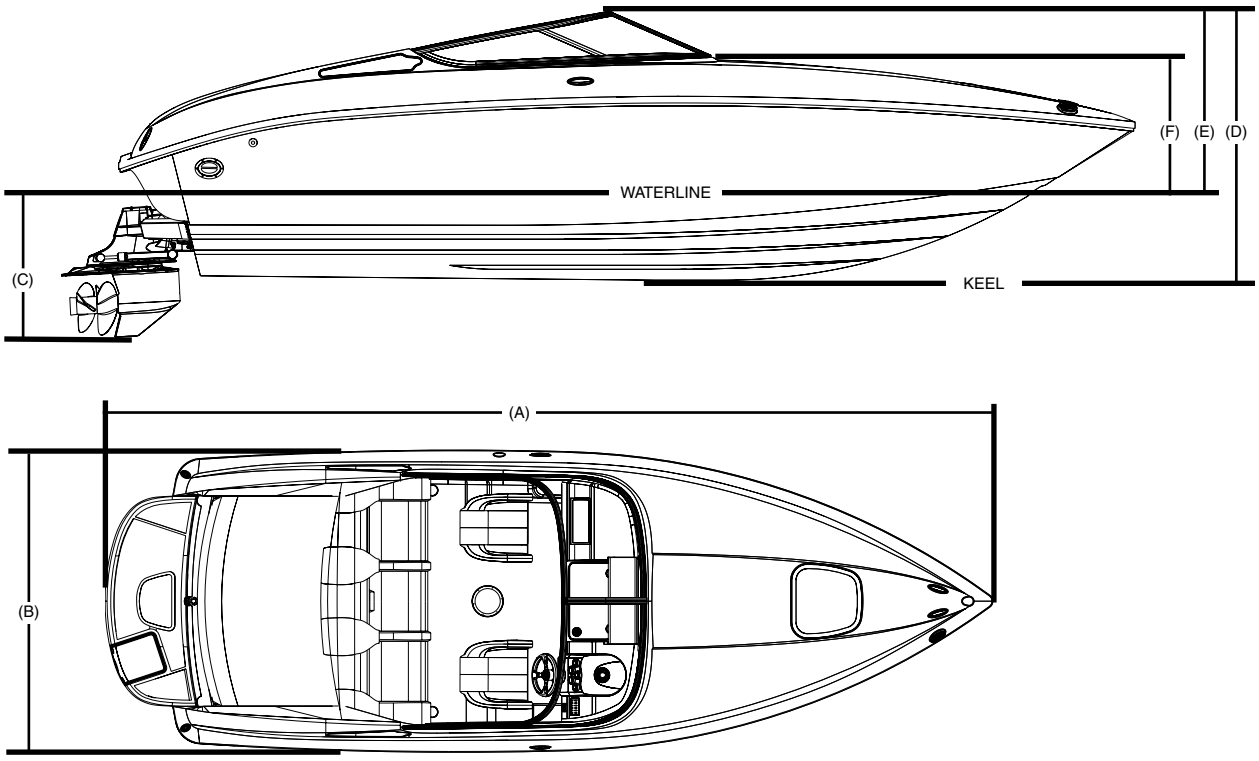

PACHANGA® 22 SPECIFICATIONS

(A) Overall Length With Std. Swim Platform	24' 0"	7.32 m
(B) Beam (Width)	8' 4"	2.54 m
(C) Draft (Stern Drive Down)	37"*	104 cm*
Draft (Stern Drive Up)	22"*	59 cm*

* MINIMUM WATER DEPTH TO PREVENT RUNNING AGROUND

Dry Weight	5,200 lbs.	2,359 kg.
Fuel Capacity	50 gal.	189 liters
Usable Fuel	45 gal.	170 liters
Dead Rise	21°	

HEIGHT DIMENSIONS

(D) Keel to Top of Windshield	5' 10"	2.89 m
(E) Waterline to Top of Windshield	4' 0"	1.22 m
(F) Waterline to Top of Deck	2' 11¾"	0.91 m

Note - Dimensions can vary depending on load and running conditions.

5. FUNCTION AND LOCATION OF THROUGH-HULL CUTOUTS

PORT THROUGH-HULL CUTOUTS
(FIG. 6.1)

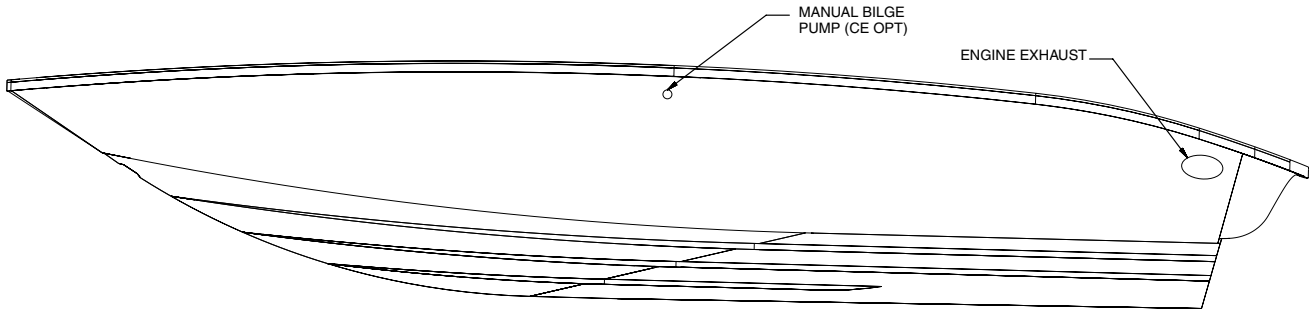

STARBOARD THROUGH-HULL CUTOUTS
(FIG. 6.2)

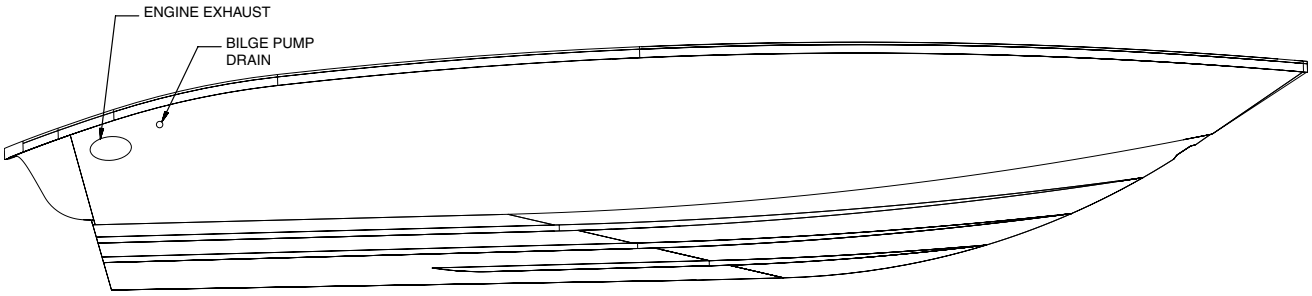

TRANSOM THROUGH-HULL CUTOUTS
(FIG. 6.3)

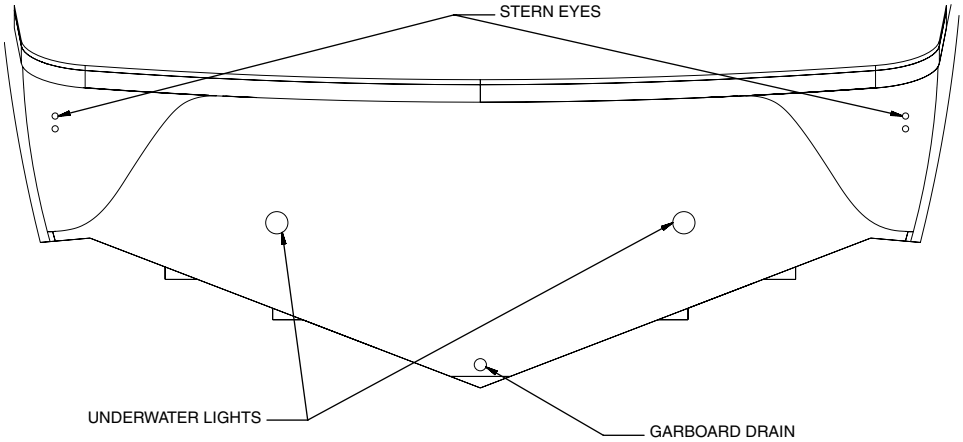

6. HELM, GAUGE & SWITCH LAYOUT

HELM
(FIG. 7.1)

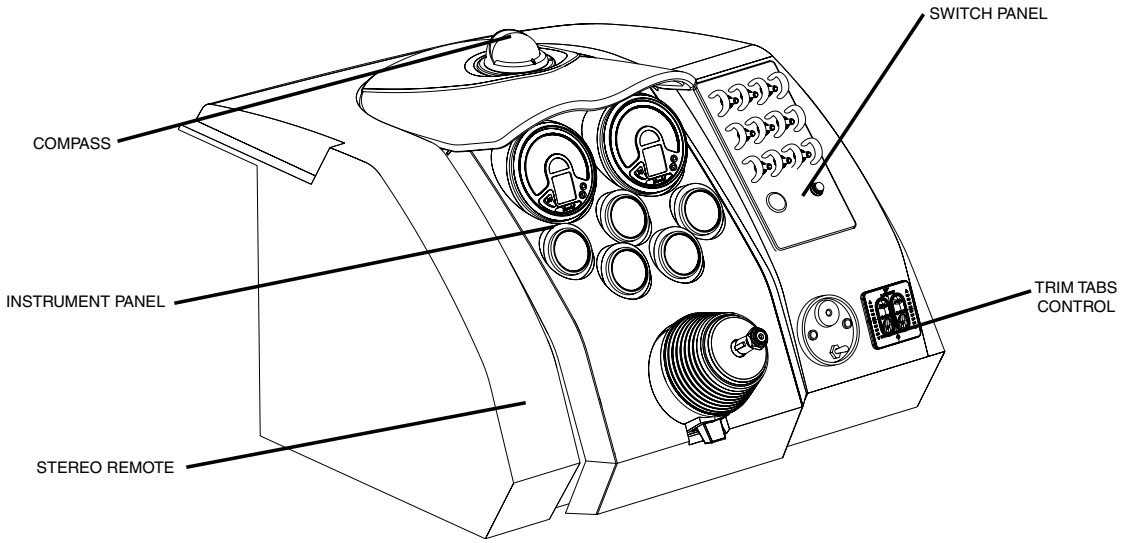

CONTROL STATION SWITCH PANEL
(FIG. 7.2)

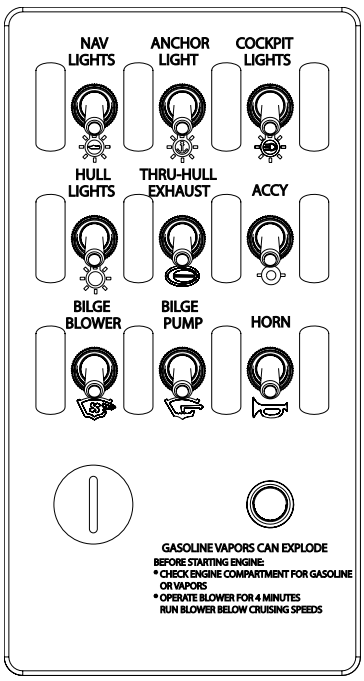

CONTROL STATION INSTRUMENT PANEL
(FIG. 8.1)

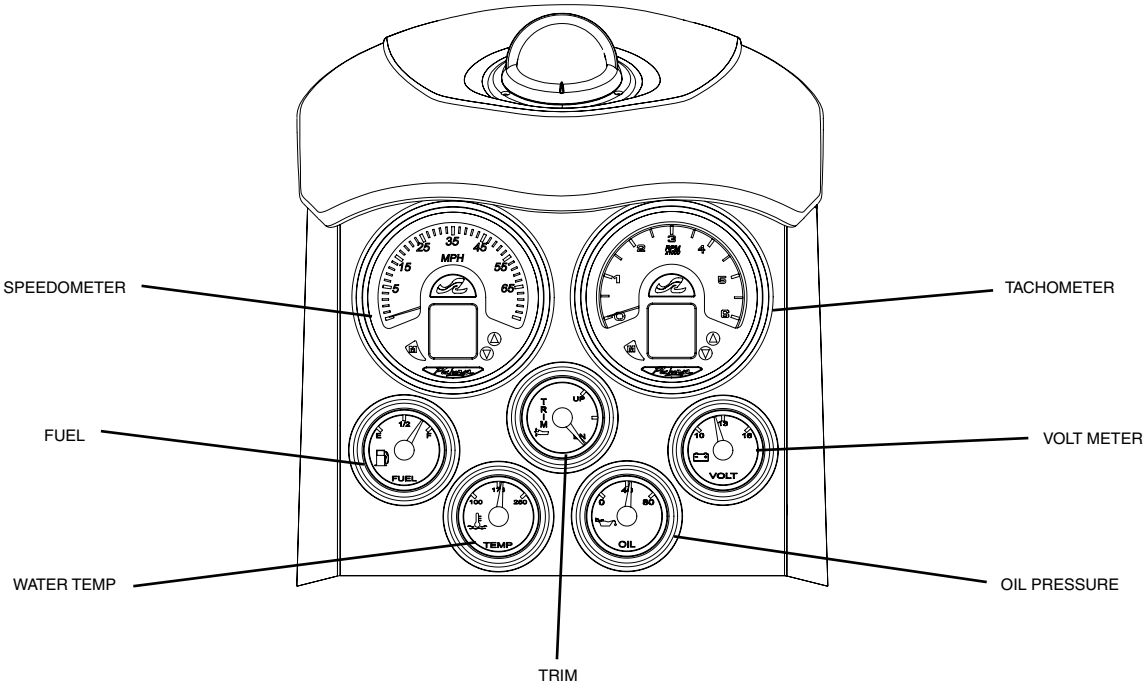

7. DECK LAYOUT

DECK LAYOUT
(FIG. 9.1)

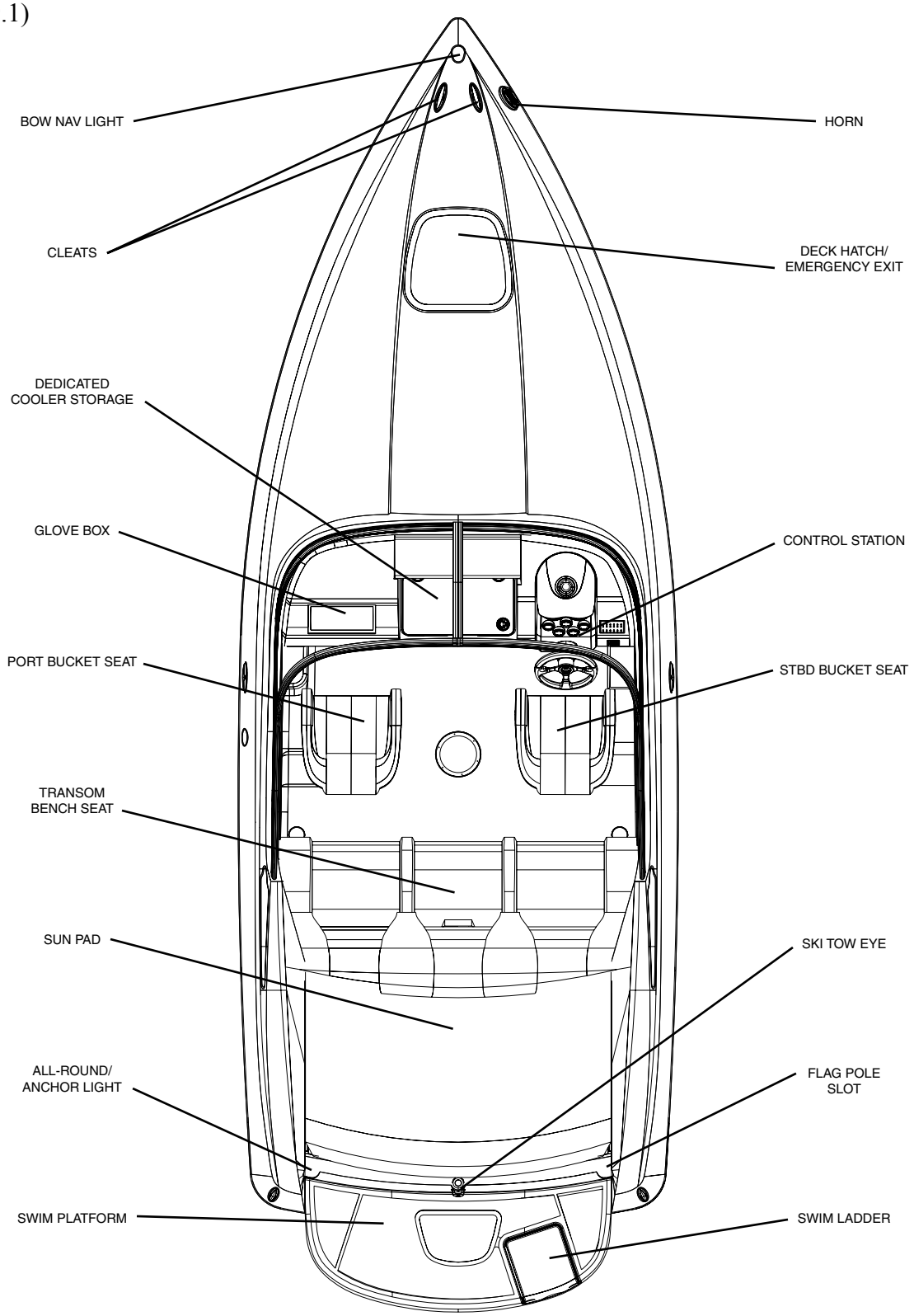

8. CLEATS

Cleats must not be used for lifting the boat; they are intended for docking or mooring use only.

CLEAT LOCATIONS
(FIG. 10.1)

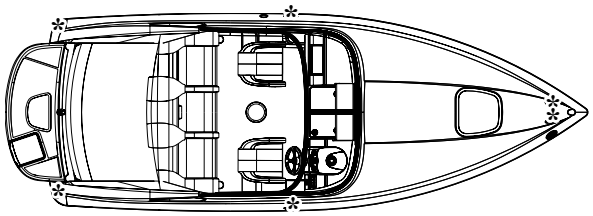

9. NAVIGATION AND ANCHOR LIGHTS

See General Information Manual for a detailed explanation of the anchor lights.

NAVIGATION AND ANCHOR LIGHTS
(FIG. 10.2)

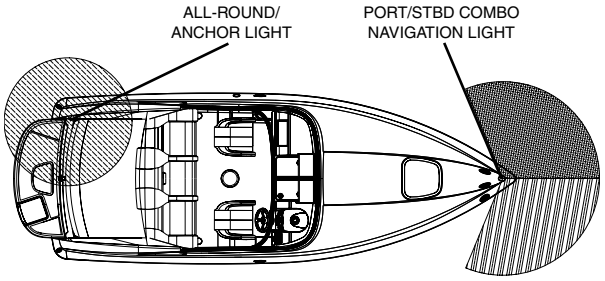

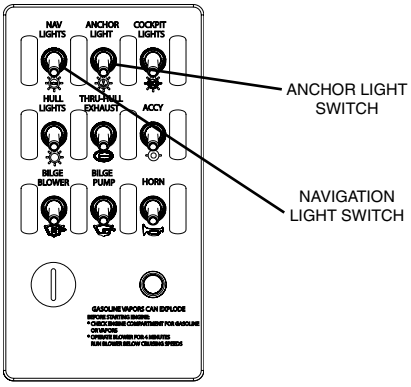

Switch Panel

10. LIGHTING

See General Information Manual for a detailed explanation of the lighting.

LIGHTING LAYOUT
(FIG. 10.3)

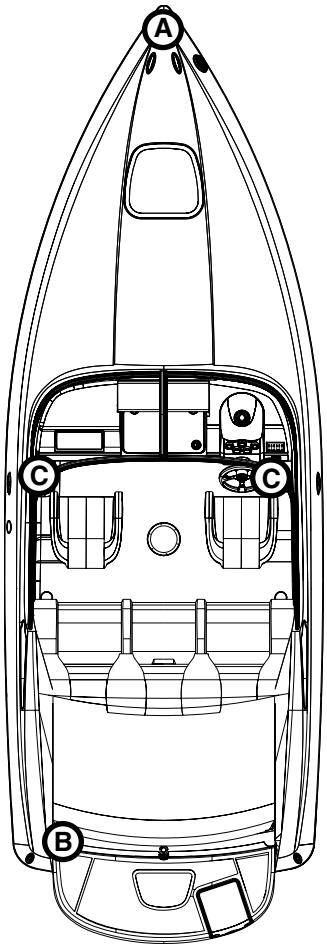

PORT & STBD NAV. LIGHTS

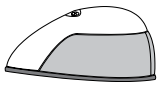

BULB REPLACEMENT
BULB# GE2641L
12V R 10W
(A)

COCKPIT LIGHT

(C) LED BULB
NO REPLACEMENT

STERN NAV. / ANCHOR LIGHT

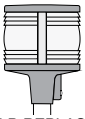

BULB REPLACEMENT
FUSE TYPE BULB
#12V10WPERKO
(B)

RECTANGLE LIGHT

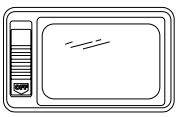

BULB
REPLACEMENT
BULB#CEC1141
(D)

11. BILGE LAYOUT

BILGE LAYOUT
(FIG. 11.1)

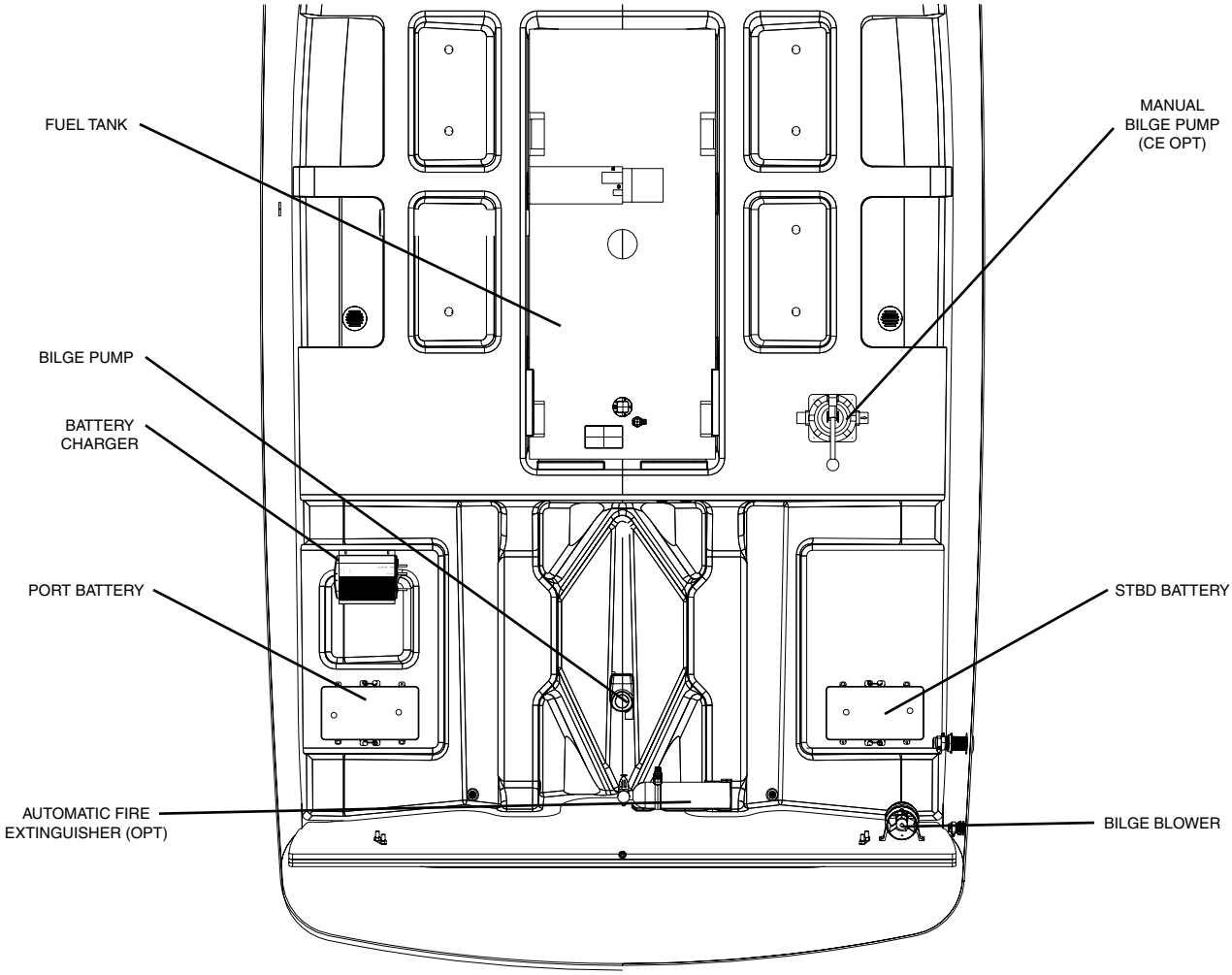

12. FIRE EXTINGUISHING SYSTEM

Your Pachanga 22 has a fire extinguisher port located under the aft bench seat cushion. Refer to the General Information Manual for a detailed explanation of the fire extinguisher port.

An optional automatic fire extinguisher system is also available. Refer to the General Information Manual for a detailed explanation of the automatic fire extinguisher system.

13. FUEL SYSTEM

The gasoline fuel system on your Pachanga 22 consists of a 50 gal. (189 liter) fuel tank, fuel tank vent, anti-siphon valve, mechanical sending unit, engine fuel supply line and fuel fill.

FUEL SYSTEM
(FIG. 12.1)

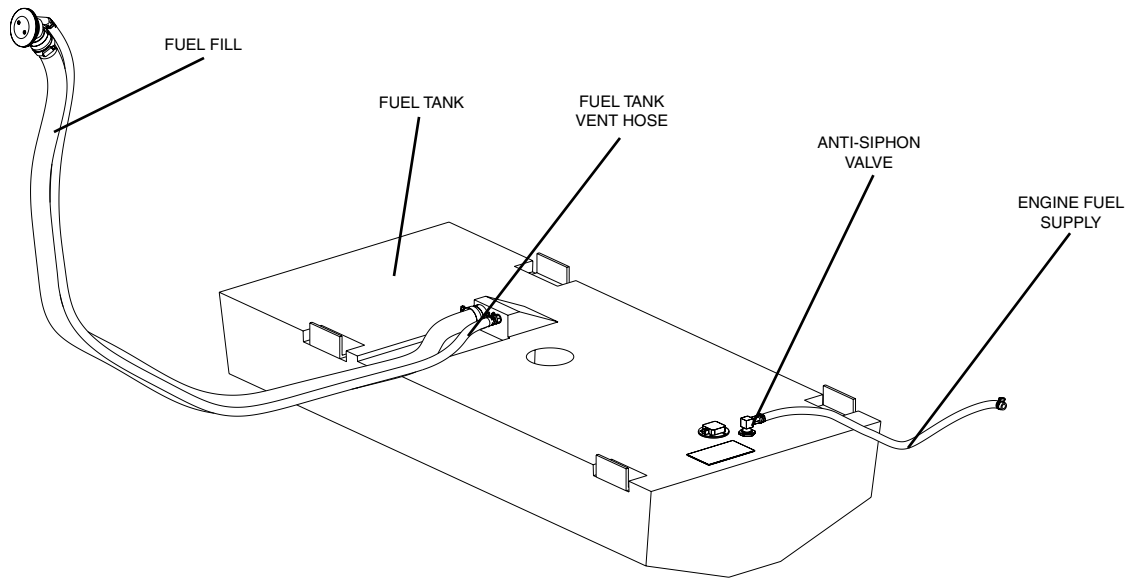

14. ENTERTAINMENT SYSTEM

The standard entertainment system on your Pachanga 22 consists of a 12V AM/FM single CD stereo, an MP3 port, amplifier, 2 water proof speakers in the cuddy, 4 speakers and 2 subwoofers and a digital remote control in the cockpit.

Optional stereo system upgrades include an additional stereo remote on the transom, 6 disc CD changer and a satellite radio receiver.

ENTERTAINMENT SYSTEM
(FIG. 13.1)

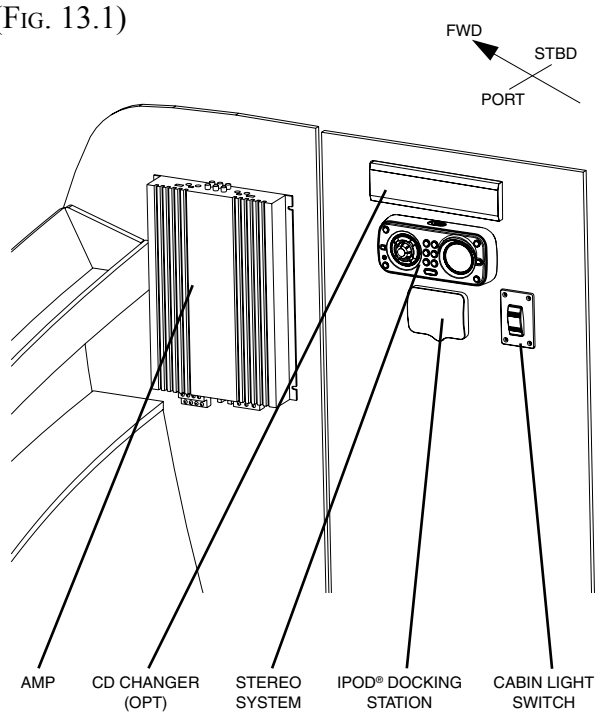

15. ELECTRICAL SCHEMATICS

This owner's manual contains electrical schematics and wiring harness illustrations for your boat. These electrical schematics were generated by electrical CAD designers at the engineering division for technical reference and service technicians. Sea Ray® does not recommend that you attempt to work on the boat's electrical system yourself. Instead, we recommend that you take your boat to your authorized Sea Ray® dealer for service. Sea Ray® reserves the right to change or update the electrical system on any model at any time without notice to the consumer and is NOT obligated to make any updates to units built prior to changes.

DC WIRING SCHEMATIC
DRAWING NO. 09-602 (1 OF 5)
(FIG. 14.1)

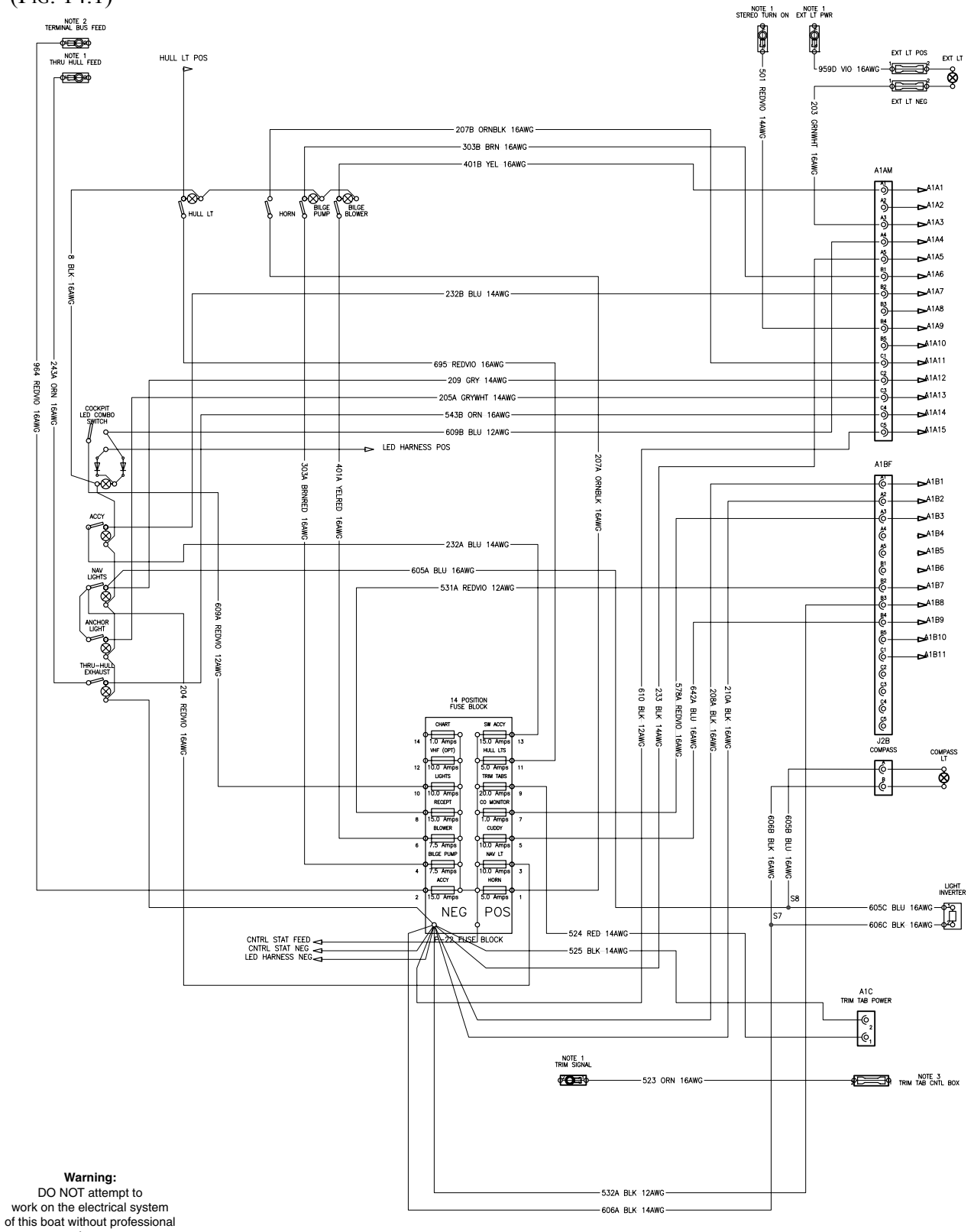

Warning:
DO NOT attempt to work on the electrical system of this boat without professional assistance.

DC WIRING SCHEMATIC
DRAWING NO. 09-602 (2 OF 5)
(FIG. 15.1)

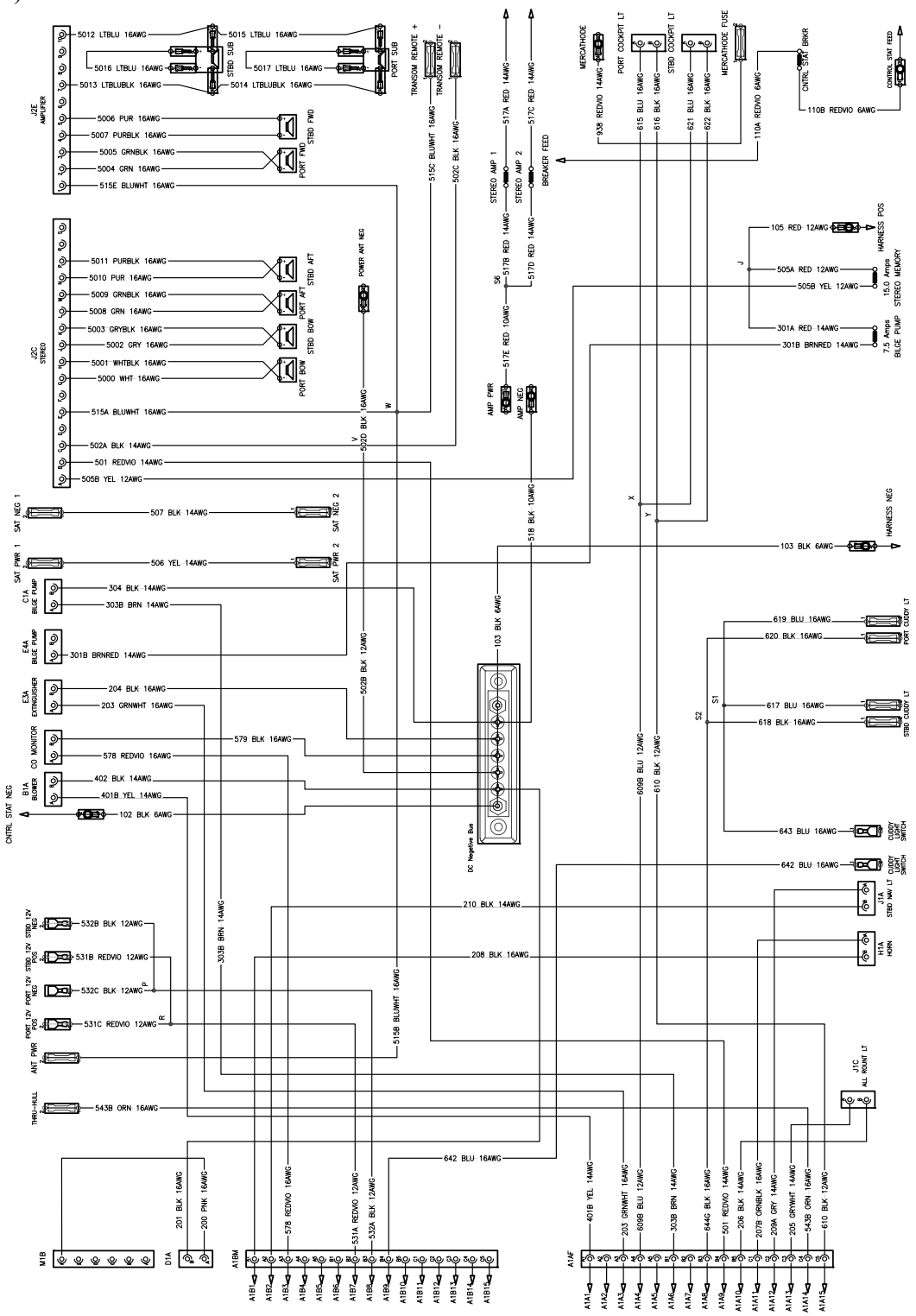

Warning:
DO NOT attempt to work on the electrical system of this boat without professional assistance.

DC WIRING SCHEMATIC
DRAWING NO. 09-602 (3 OF 5)
(FIG. 16.1)

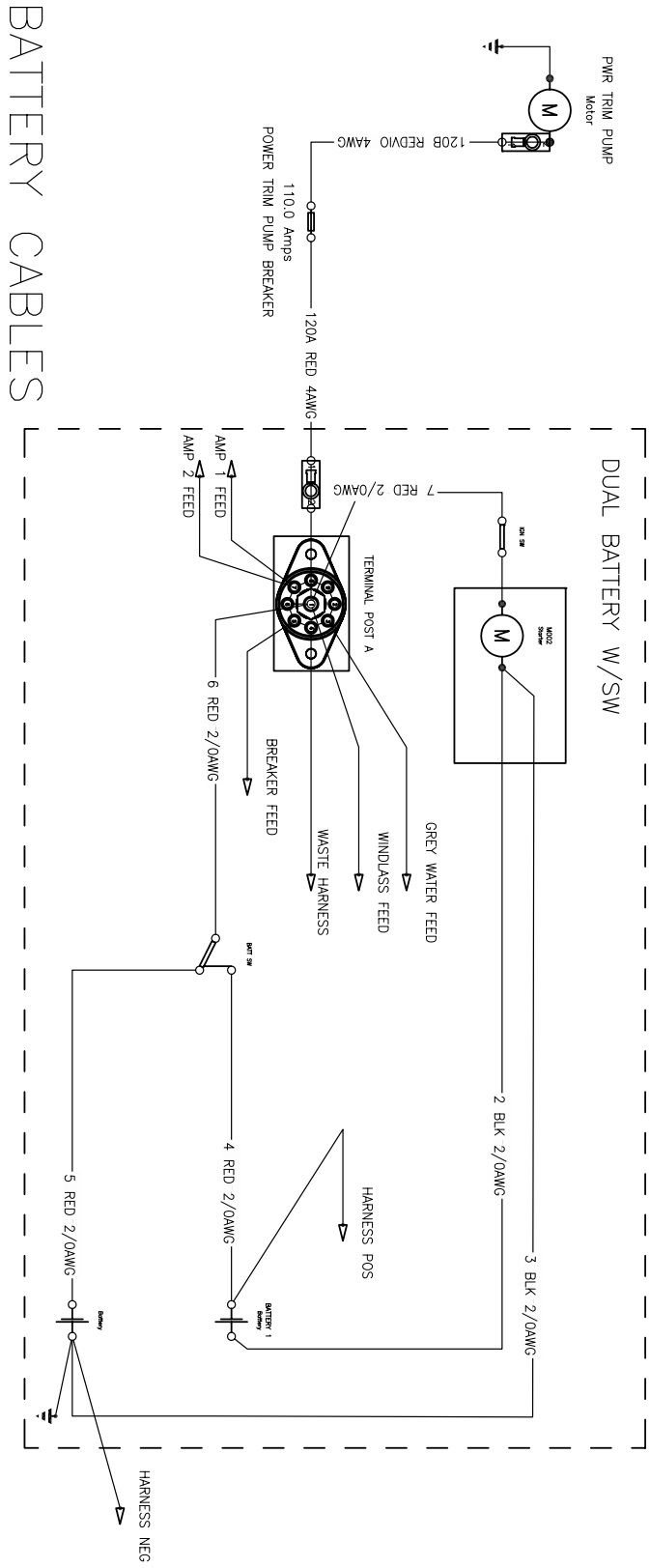

Warning:
DO NOT attempt to work on the electrical system of this boat without professional assistance.

DC WIRING SCHEMATIC
DRAWING NO. 09-602 (4 OF 5)
(FIG. 17.1)

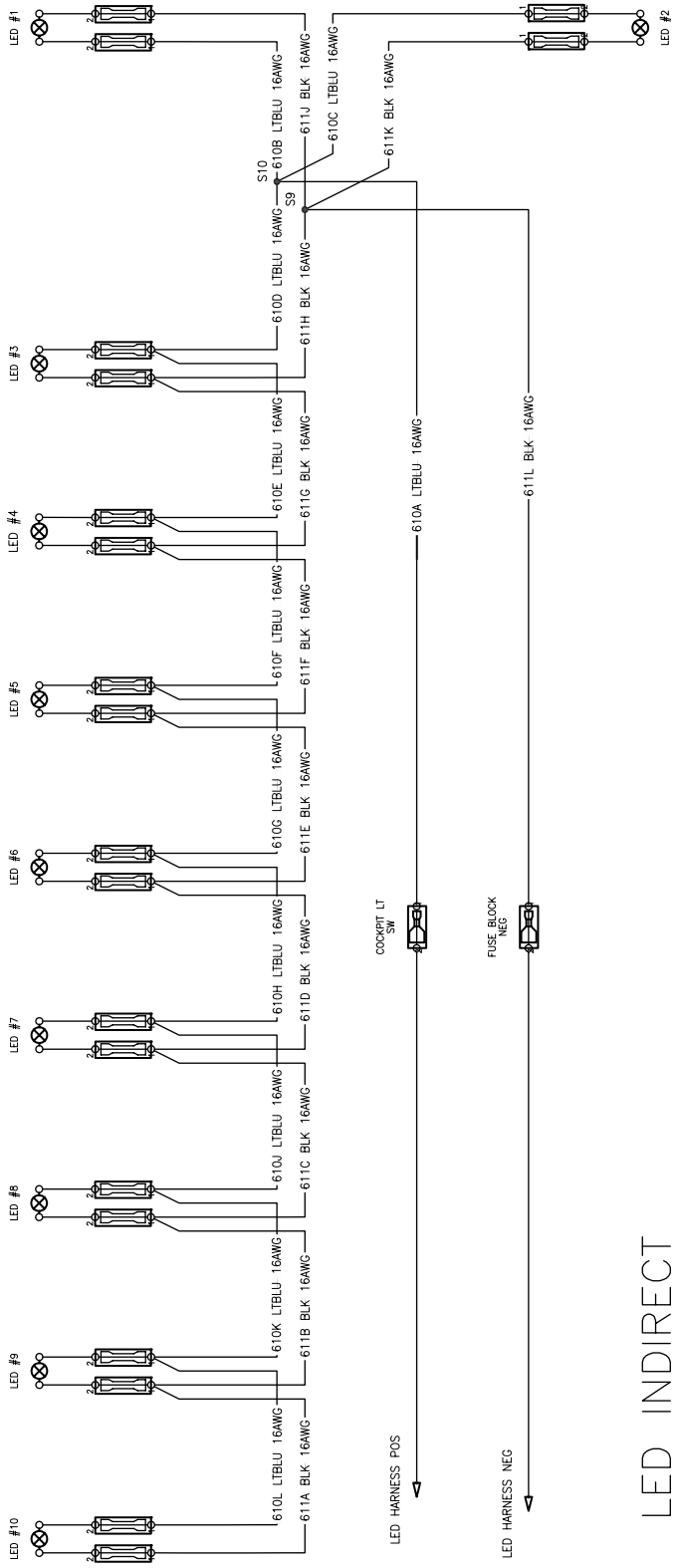

Warning:
DO NOT attempt to work on the electrical system of this boat without professional assistance.

DC WIRING SCHEMATIC
DRAWING NO. 09-602 (5 OF 5)
(FIG. 18.1)

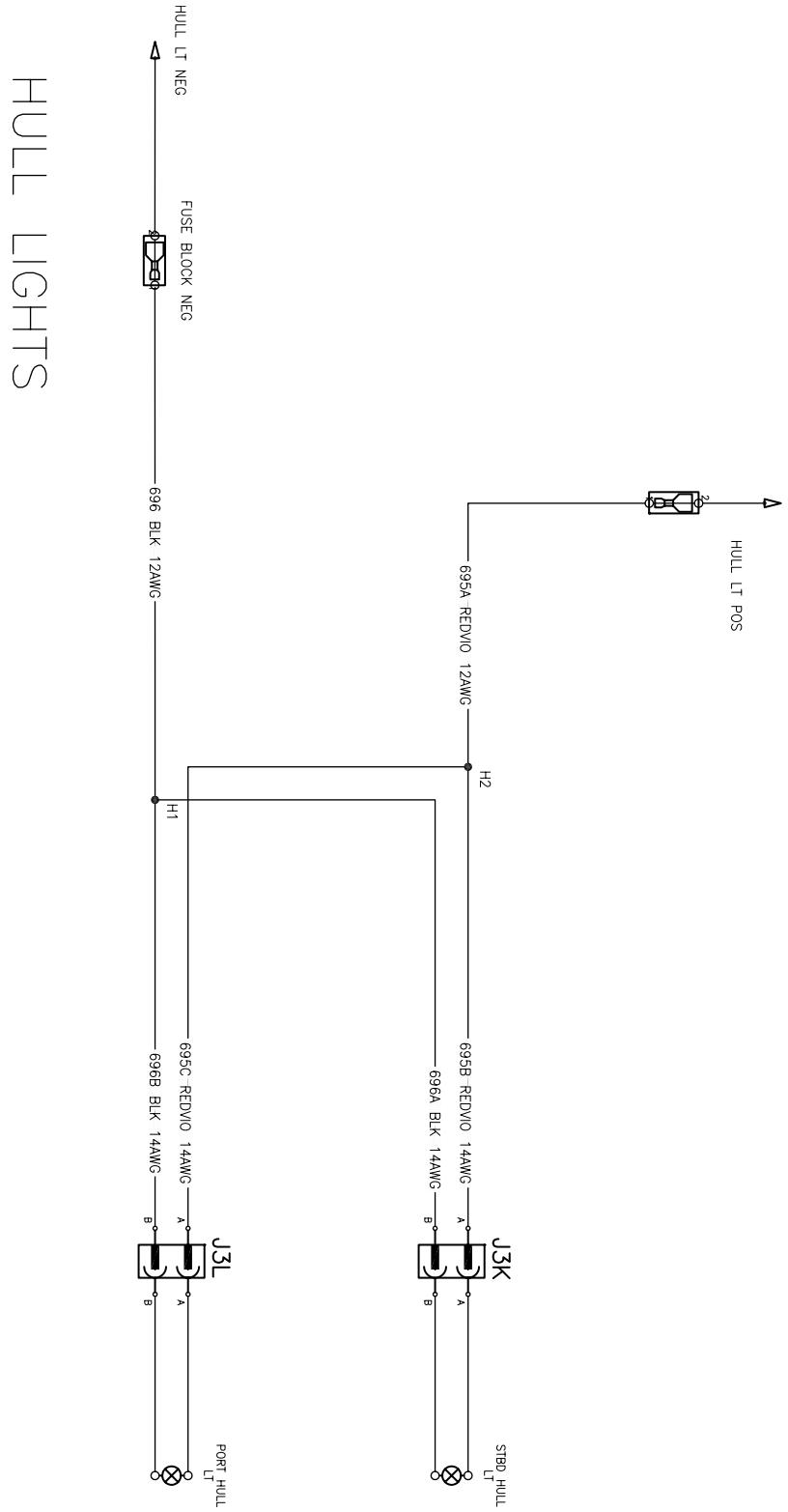

Warning:
DO NOT attempt to work on the electrical system of this boat without professional assistance.

STEREO WIRING SCHEMATIC (STANDARD)
DRAWING NO. 09-607
(FIG. 19.1)

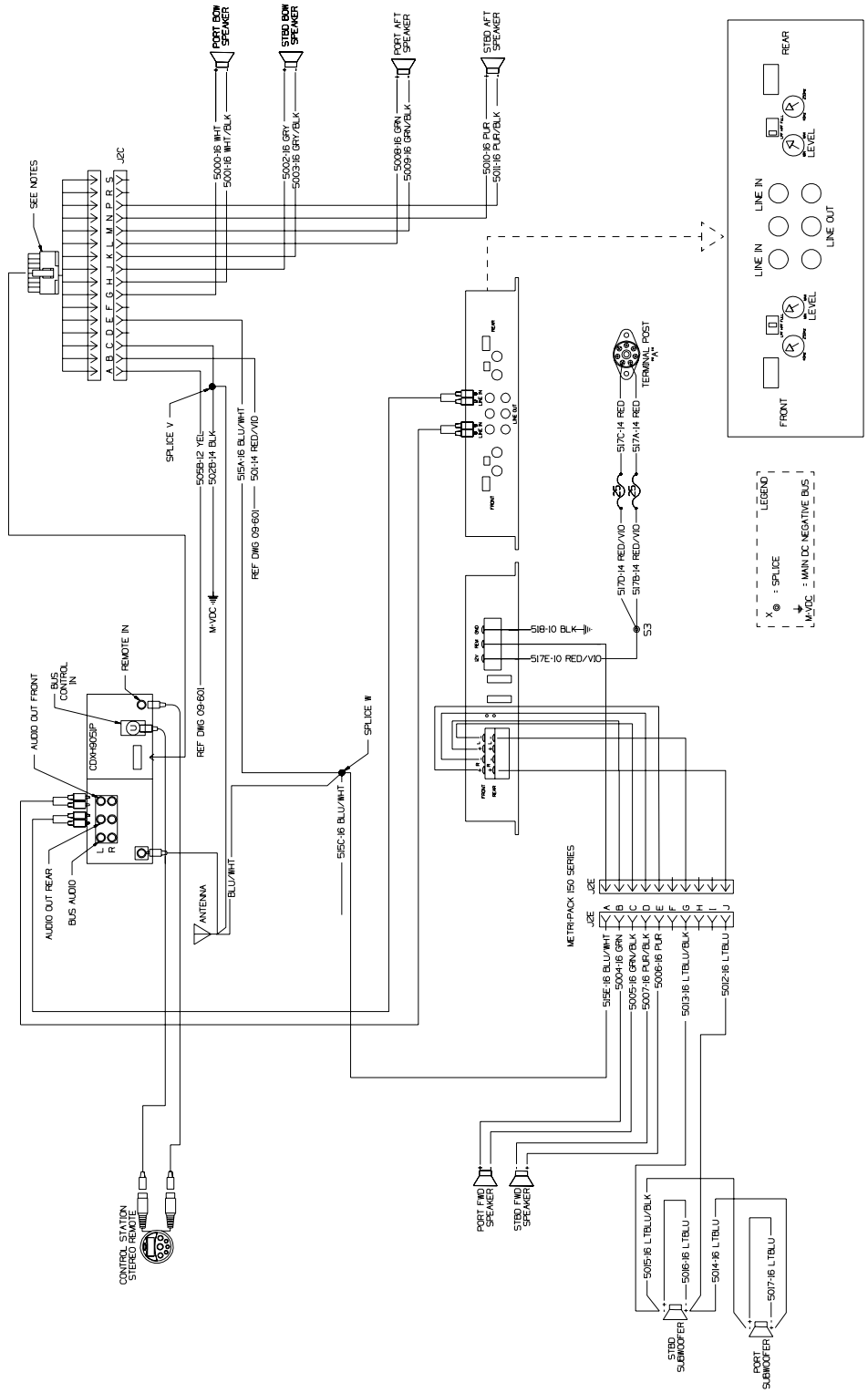

Warning:
DO NOT attempt to work on the electrical system of this boat without professional assistance.

STEREO WIRING SCHEMATIC (OPT)
DRAWING NO. 09-608
(FIG. 20.1)

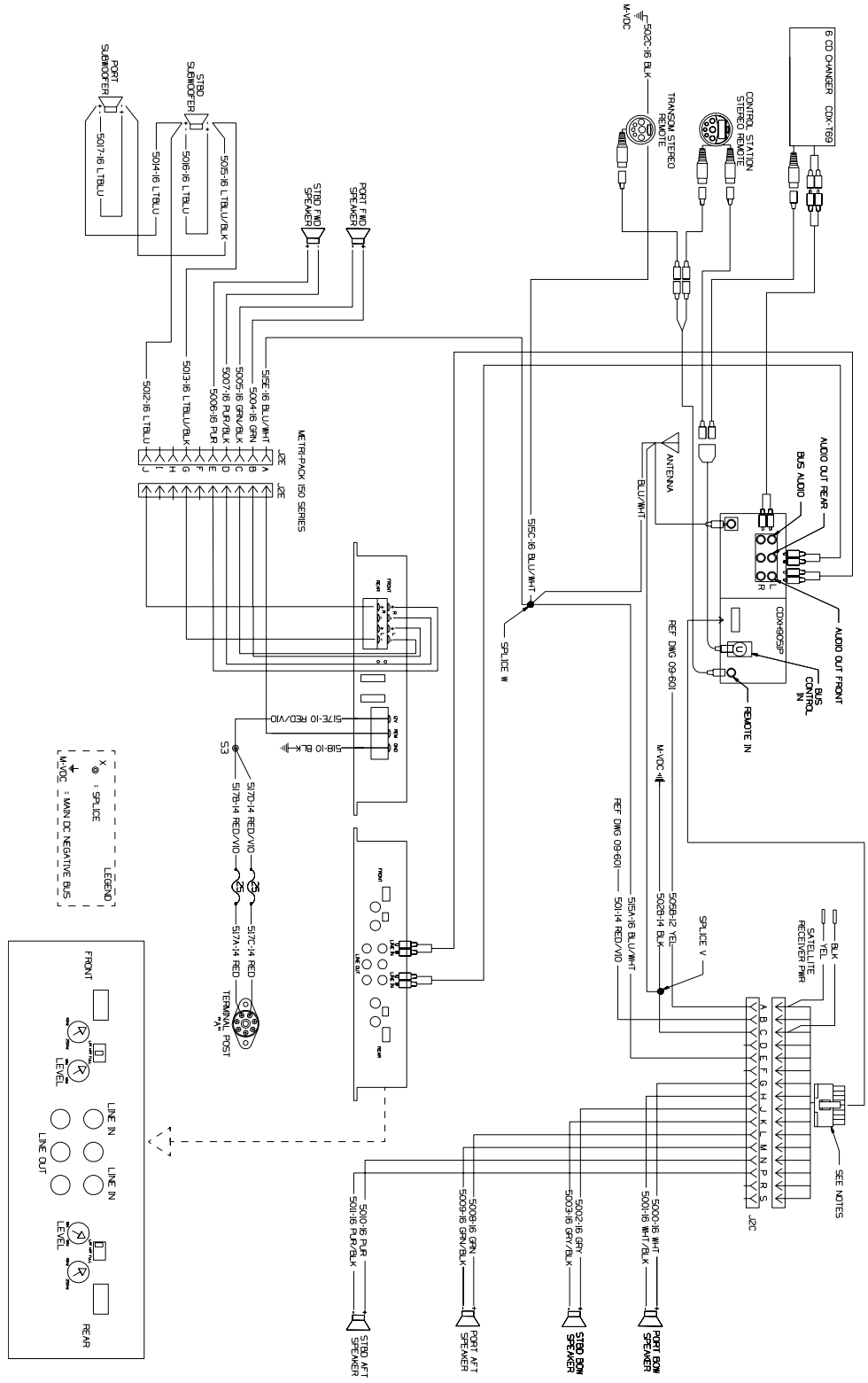

Warning:
DO NOT attempt to work on the electrical system of this boat without professional assistance.

SATELLITE STEREO SYSTEM DIAGRAM
DRAWING NO. 09-609
(FIG. 21.1)

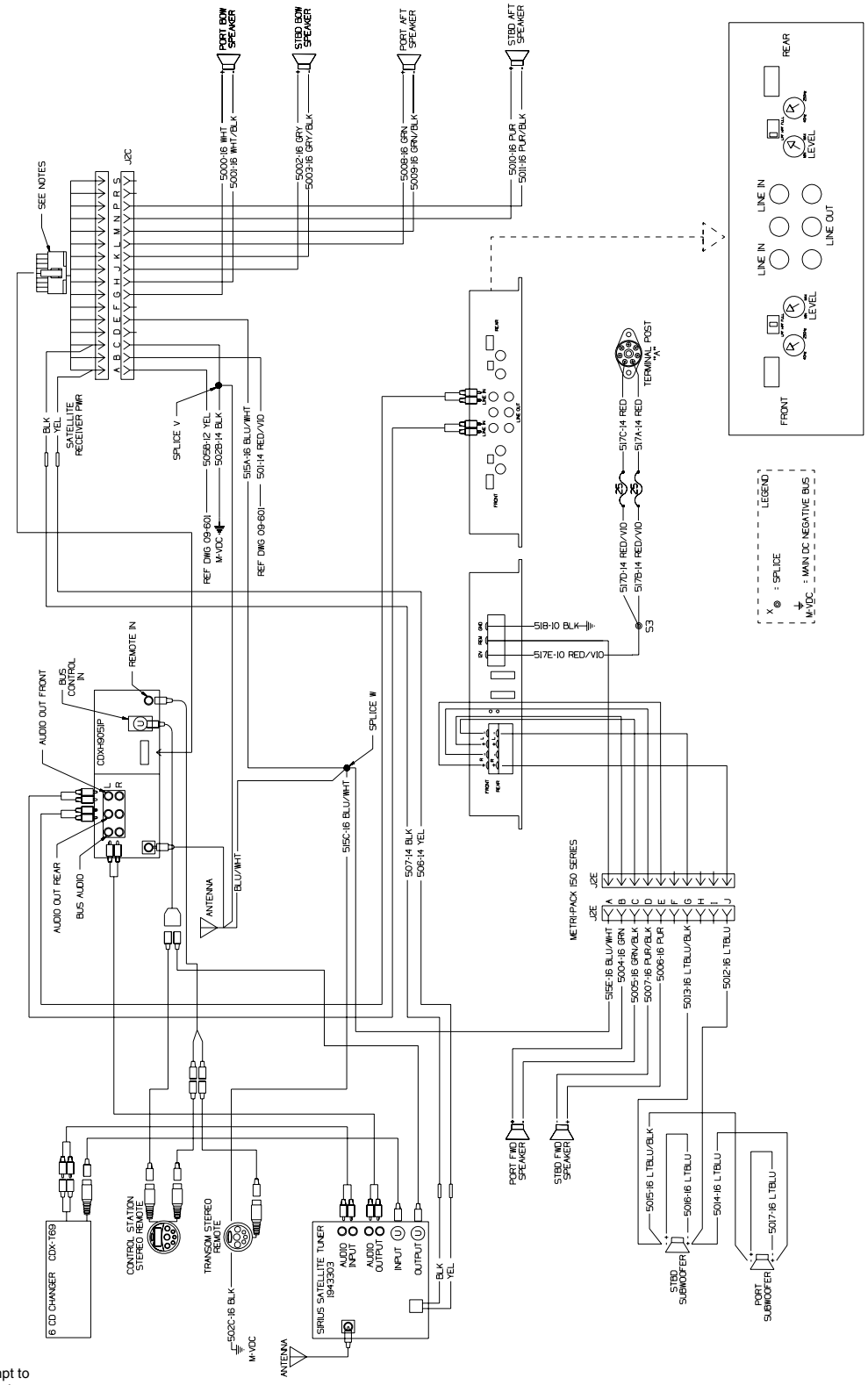

Warning:
DO NOT attempt to work on the electrical system of this boat without professional assistance.

BATTERY CHARGER SYSTEM PRINT (DOMESTIC)
DRAWING NO. 09-738 (1 OF 2)
(FIG. 22.1)

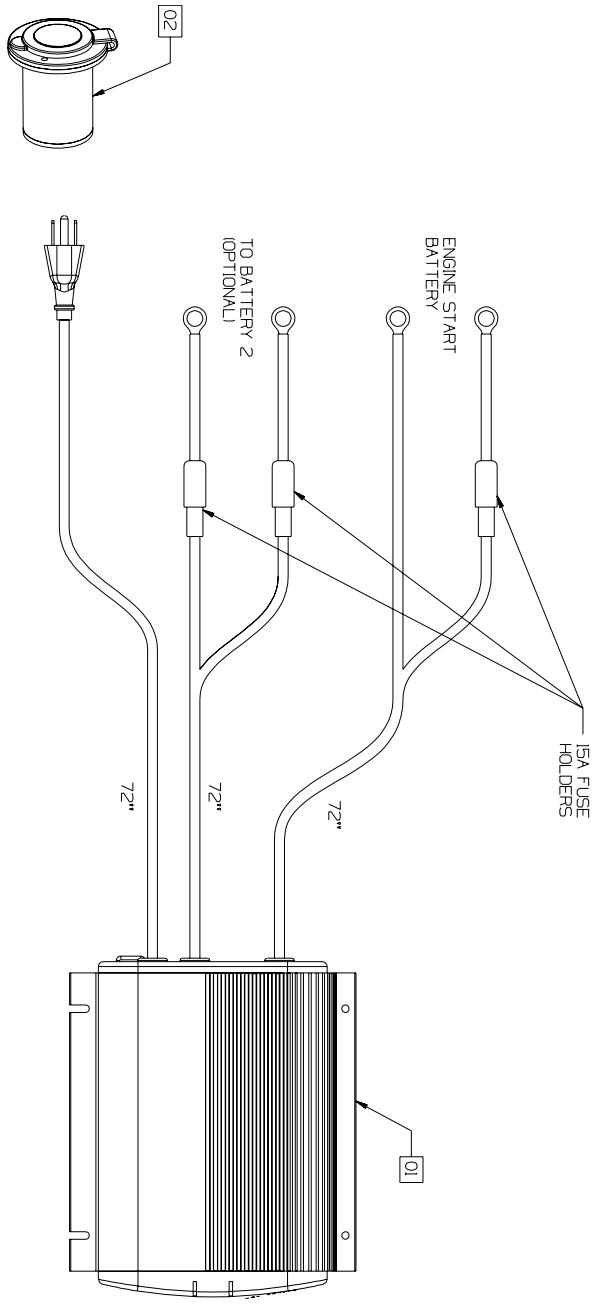

DOMESTIC

Item #	MRP #	Vendor Part Number	Sea Ray - AS400 Description
01	1835711	41212	CHARGER, BATT 12A 120VAC 2-BANK PRO SPRT
02	1835713	51202	HOLDER, BATT CHARGER PLUG

Warning:
DO NOT attempt to work on the electrical system of this boat without professional assistance.

BATTERY CHARGER SYSTEM PRINT (INTERNATIONAL)
DRAWING NO. 09-738 (2 OF 2)
(FIG. 23.1)

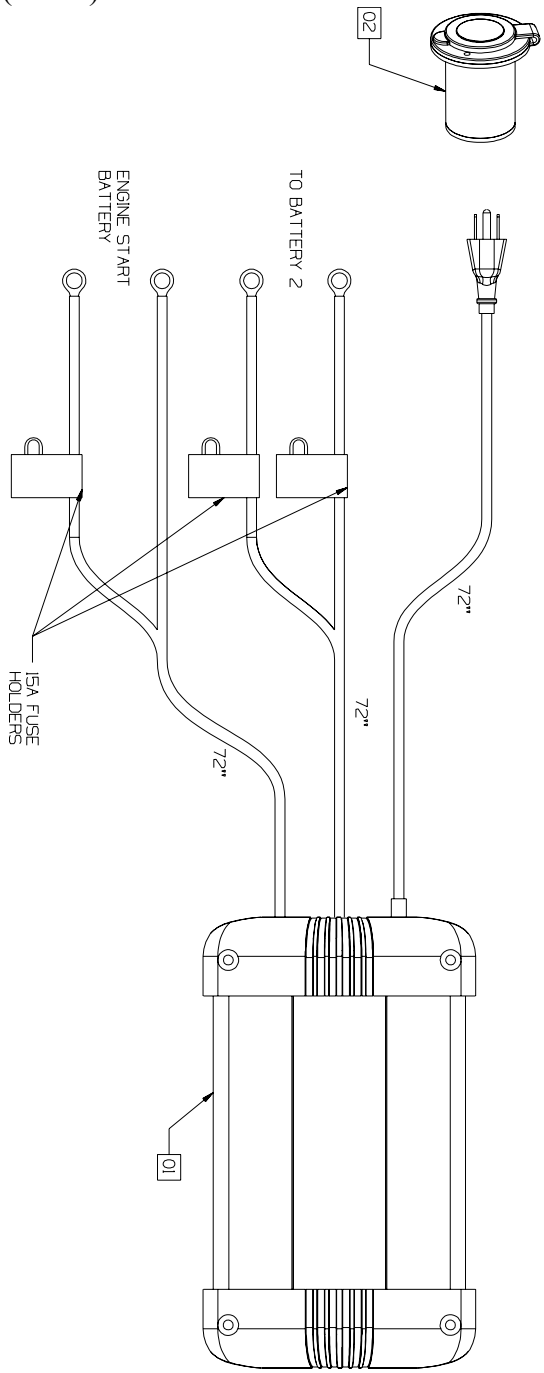

INTERNATIONAL

Item #	MRP #	Vendor Part Number	Sea Ray - AS400 Description
01	1835712	51010	CHARGER, BATT 10A 2-BANK PRO TOUR
02	1835713	51202	HOLDER, BATT CHARGER PLUG

Warning:
DO NOT attempt to work on the electrical system of this boat without professional assistance.

NORTHSTAR BLACK BOX VHF SYSTEM DIAGRAM
DRAWING NO. 09-745
(FIG. 24.1)

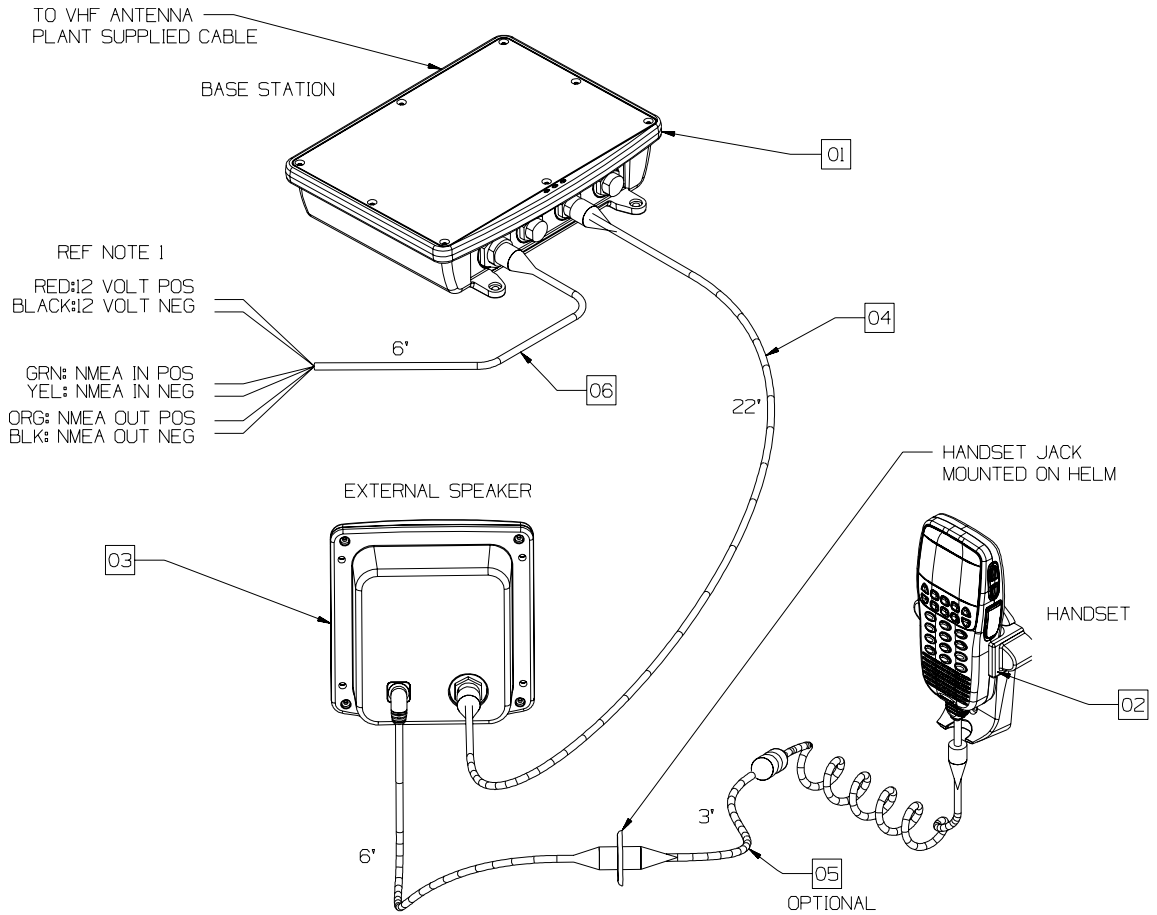

Item #	MRP #	Vendor Part Number	Sea Ray - AS400 Description
01*	1807908	NSSVHF	BASE, PLAS NRTHSTR VHF RADIO BLKBOX
02*	1807910	NSHST-VHF	RADIO, VHF NRTHSTR BLKBOX HANDSET
03*	1807911	NSSPK-VHF	SPEAKER, REMOTE NRTHSTR VHF BLKBOX
04*	1807869	WC278-7-7M	HARNESS, NRTHSTR VHF BLKBX TO SPKR CBL 72"
05	1807870	WC279-1-1M	HARNESS, NRTHSTR VHF BLKBX SPKR-HNDSET EXT 3'
06*	1807871	WA101-VHF	HARNESS, NRTHSTR VHF BLKBX PWR CBL 6'
NOT SHOWN	1807449	NS100SS	RADIO, VHF NORTHSTAR NS100 (COMPLETE PACKAGE)

* INCLUDED IN COMPLETE PACKAGE PART #1807449

Warning:
DO NOT attempt to work on the electrical system of this boat without professional assistance.

FARIA GPS SPEED SYSTEM DIAGRAM
DRAWING NO. 09-759
(FIG. 25.1)

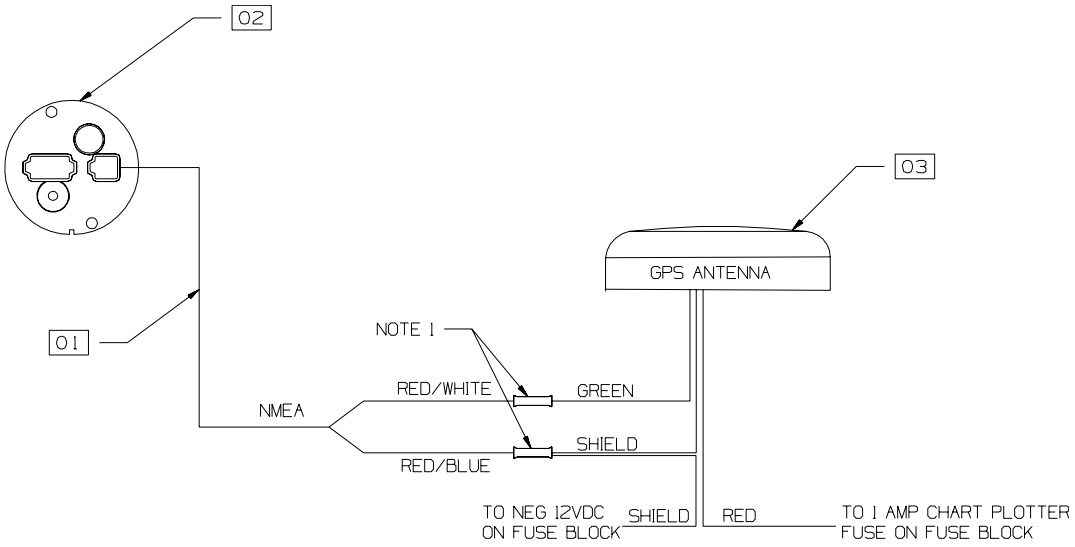

ITEM	QTY.	DESCRIPTION	SEA RAY PART#
01	1	GPS ANTENNA HARNESS	1953730
02	1	5" 80 MPH MG2000 SPEEDOMETER W/LCD	1949728
03	1	GPS ANTENNA	1954366
04			
05			
07			
08			
09			
10			
11			
12			

Warning:
DO NOT attempt to work on the electrical system of this boat without professional assistance.

MERCURY DTS SYSTEM DIAGRAM
DRAWING NO. 09-770
(FIG. 26.1)

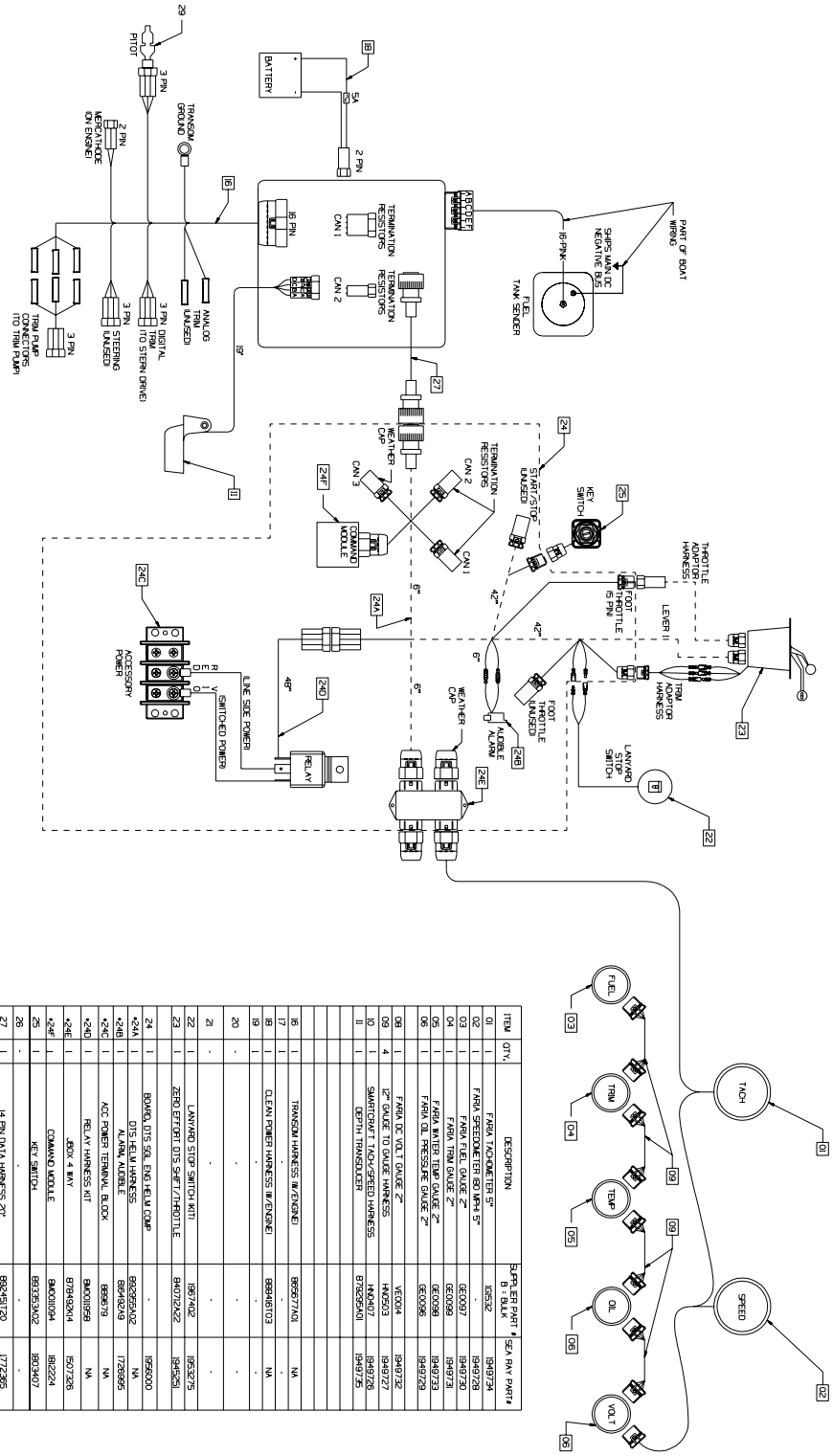

ITEM	QTY.	DESCRIPTION	SUPPLIER PART # B = BULK	SEA RAY PART#
01	1	FARIA TACHOMETER 5"	16532	1949734
02	1	FARIA SPEEDOMETER 80 MPH 5"	-	1949728
03	1	FARIA FUEL GAUGE 2"	GE0097	1949730
04	1	FARIA TRIM GAUGE 2"	GE0099	1949731
05	1	FARIA WATER TEMP GAUGE 2"	GE0098	1949733
06	1	FARIA OIL PRESSURE GAUGE 2"	GE0096	1949729
08	1	FARIA DC VOLT GAUGE 2"	VE0014	1949732
09	4	12" GAUGE TO GAUGE HARNESS	HA0503	1949727
10	1	SMARTCRAFT TACH-SPEED HARNESS	HA0407	1949726
11	1	DEPTH TRANSDUCER	87929540	1949735
16	1	TRANSOM HARNESS W/ENGINE	86597A01	NA
17	1	-	-	-
18	1	CLEAN POWER HARNESS W/ENGINE	88846T03	NA
19	1	-	-	-
20	-	-	-	-
21	-	-	-	-
22	1	LANYARD STOP SWITCH KIT	1967402	1953275
23	1	ZERO EFFORT DTS SHIFT/THROTTLE	84072A22	1945251
24	1	BOARD, DTS SQL END HELM COMP	-	1956000
*24A	1	DTS HELM HARNESS	88035A02	NA
*24B	1	ALARM, AUDIBLE	88442A49	1726995
*24C	1	ACC POWER TERMINAL BLOCK	8696T9	NA
*24D	1	RELAY HARNESS KIT	84K01958	NA
*24E	1	J-BOX 4 WAY	87H4B2K14	1507326
*24F	1	COMMAND MODULE	84K01K94	1812224
25	1	KEY SWITCH	86335A02	1807407
26	-	-	-	-
27	1	14 PIN DATA HARNESS 20'	88245T20	1772365
28	1	-	-	-
29	1	100 PSI PITOT SENSOR KIT	88887BA 2	1690375

* INCLUDED IN #24 KIT

Warning:
DO NOT attempt to work on the electrical system of this boat without professional assistance.

INDEX

B

Builder's Plate 1

C

Certifications
- CE (Common European) mark vii
- NMMA (National Marine Manufacturers Assoc.) . vii

Clearances 5

D

Dimensions 5

E

Electrical Schematics 13
Entertainment System 13

F

Fire Extinguishing System 12
Fuel System 12

H

Hull
- Identification Number (HIN) vi
- Through-Hull Cutouts 6

L

Layout
- Bilge 11
- Deck 9
- Helm, Gauges & Switches 7
- Passenger Locations 1

Lights 10
Load Capacity 1

N

Navigation Lights 10

P

Passenger Locations 1

S

Safety Labels 2

W

Warranties ..... vi, viii