Wellcraft®

Fishboat

Owner's Manual

Wellcraft®

FISHBOAT
Owner's Manual

Model/Number: _____

Hull Identification Number: _____

Date of Purchase/First Use: _____

Dealer Name: _____

Address: _____

_____

Phone Number: _____

Wellcraft®

Catalog Requests Call 1-800-603-BOAT

Genmar © 2004 Wellcraft Marine Corp., a subsidiary of Genmar Industries, Inc. 1651 Whitfield Avenue, Sarasota, FL 34243

For a complete list of standard and optional features and equipment, consult your local Wellcraft dealer. Due to a policy of continual product improvement, specifications are subject to change without notice. The weights and volumes shown are estimated and can vary from boat to boat because of equipment, etc. Wellcraft boats meet or exceed U.S. Coast Guard regulations at the date of manufacture. Wellcraft boats are NMMA Certified using ABYC standards.Wellcraft is a trademark of Genmar Industries, Inc. Printed in USA. Part No. 3208-5181

Rev. 10/03

Table of Contents

Introduction i

General Information 1-1
YOU AND YOUR NEW BOAT 1-1
BOATING LAWS AND REGULATIONS 1-6
RECOMMENDED READING.....1-7
PRE-DELIVERY CHECKLIST.....1-9
SERVICE/MAINTENANCE LOG 1-10
BOAT DATA SHEET.....1-11
FUEL LOG.....1-12
FLOAT PLAN.....1-13
WARRANTY REGISTRATION TRANSFER ..1-14

Boating Safety.....2-1
ADVISORY STATEMENTS.....2-1
HAZARD COMMUNICATION 2-1
SAFE BOATING RECOMMENDATIONS 2-1
SAFETY EQUIPMENT.....2-2
SAFE BOATING COURSES 2-5
DRUGS AND ALCOHOL 2-5
SAFE OPERATION.....2-5
CARBON MONOXIDE AND BOATING 2-6
WATER SPORTS 2-8
RULES OF THE ROAD 2-9
GENERAL RULES OF SEAMANSHIP.....2-11
NAVIGATIONAL AIDS CHART 2-14

Specifications and Layout 3-1
SPECIFICATIONS.....3-1
SAFETY LABEL LOCATIONS 3-13

Boat Equipment.....4-1
12-VOLT DC ELECTRICAL SYSTEM.....4-1
SWITCHES 4-3
AC ELECTRICAL SYSTEM 4-4
MAIN ELECTRICAL PANEL 4-6
ELECTRICAL SYSTEM
TROUBLESHOOTING CHART 4-8
FRESH WATER SYSTEM 4-9
WATER SYSTEM TROUBLESHOOTING....4-11
WASTE SYSTEMS 4-12
AUTOMATIC BILGE PUMP.....4-12
SEACOCKS.....4-13
RAW WATER SYSTEM 4-13
BILGE BLOWER.....4-14
ALCOHOL STOVE.....4-14
MARINE STEREO.....4-14
VHF RADIO 4-14
NAVIGATION EQUIPMENT 4-14
FUEL SYSTEM 4-15
ENGINE MULTI-FUNCTION
ALARM GAUGE 4-15
ENGINE EXHAUST SYSTEM.....4-15
REFRIGERATOR.....4-15
AIR CONDITIONING 4-16

Controls and Indicators.....5-1
INSTRUMENTATION 5-1
STEERING 5-2
SHIFT/THROTTLE CONTROL.....5-3
POWER TRIM/TILT OPERATION 5-5

Trailering.....6-1
GROSS VEHICLE WEIGHT RATING.....6-1
WEIGHT DISTRIBUTION 6-1
HITCH 6-1
SAFETY CHAINS.....6-2
TRAILERING GUIDELINES.....6-2
BACKING A TRAILER.....6-3
LAUNCHING GUIDELINES.....6-3
LOADING YOUR BOAT
ON THE TRAILER 6-4

Pre-launch and Underway 7-1
LAUNCH AND CRUISE CHECKLIST.....7-1
FUELING 7-2
LOADING PASSENGERS AND GEAR 7-3
STARTING PROCEDURES 7-3
MANEUVERING 7-4
ACCELERATION.....7-5
TRIMMING YOUR BOAT.....7-5
ANCHORING 7-8
NAVIGATION LIGHTS.....7-8
HAZARDOUS CONDITIONS.....7-9
REACTING TO EMERGENCIES.....7-10
ADDITIONAL UNDERWAY INFORMATION...7-12
RETURNING TO SHORE 7-12

Winterization and Commissioning....8-1
LIFTING THE BOAT.....8-1
PREPARATION FOR STORAGE 8-1
ENGINE, SYSTEMS & COMPONENTS 8-2
STORAGE ON TRAILER.....8-4
RECOMMISSIONING THE
BOAT AFTER STORAGE.....8-4

General Maintenance.....9-1
SERVICE SCHEDULE 9-1
SALTWATER CORROSION 9-2
BOTTOM MAINTENANCE 9-2
PROTECTION AGAINST ELECTROLYSIS 9-2
DECK AND HULL CARE 9-3
FIBERGLASS REPAIR 9-4
HARDWARE AND FITTINGS.....9-4
UPHOLSTERY 9-5
INTERIOR FABRICS.....9-5
WINDSHIELDS AND WINDOWS.....9-5
CARPETING 9-5
CANVAS 9-5

Nautical Glossary 10-1

Introduction

Congratulations on your new boat purchase and welcome to our boating family!

We want your boating experience to be the most enjoyable possible. The more you know about your new boat, the more you'll enjoy the time you spend aboard. That's why we prepared this manual. It's your guide for safe operation as well as understanding your boat's systems and equipment. It has been written for the beginning boater but experienced boaters will find helpful information as well. Be sure to read the contents thoroughly.

The popularity of boating and other water sports has grown tremendously in the past few years. Because of this, safety is an important issue for everyone who shares our waterways.

Remember that along with the freedom and exhilaration of boating comes the responsibility that you have for the safety of your passengers and the other boaters who share the water with you. Throughout this manual, specific precautions and symbols identify safety-related information. Be sure to pay close attention to them.

⚠ This symbol means "pay attention!" Here is important information for your safety. If you don't follow these instructions, you can damage your boat, hurt yourself or someone else or, even worse, have a fatal accident.

⚠ CAUTION

This symbol and signal word indicate a potentially hazardous situation. If you ignore this safety message, property damage or minor or moderate personal injury MAY or CAN result.

⚠ WARNING

This symbol and signal word indicate a potential hazard. If you ignore this safety message, serious injury or death CAN result.

⚠ DANGER

This symbol and signal word indicate an immediate hazard. If you ignore this safety message, serious personal injury or death WILL result.

The precautions in this manual can't and don't cover every boating situation. If a specific method or procedure is not recommended, you must make sure that what you do is safe for you and others. Always use common sense when boating! Remember too that every safe boating excursion is a happy experience.

We'd also like to remind you to be kind to our environment while you're boating. Don't throw garbage and other refuse overboard. And do your best to keep harmful compounds like gasoline and antifreeze out of the water.

This manual has been compiled to help you operate your craft with safety and pleasure. It contains the details of the craft, the equipment supplied or fitted, its systems, and information on its operation and maintenance. Please read it carefully and familiarize yourself with the craft before using it.

If this is your first craft, or if you are changing to a type of craft you are not familiar with, for your own comfort and safety, please ensure that you obtain handling and operating experience before "assuming command" of the craft. Your dealer or national sailing federation or yacht club will be pleased to advise you of local sea schools and competent instructors.

PLEASE KEEP THIS MANUAL IN A SECURE PLACE, AND HAND IT OVER TO THE NEW OWNER WHEN YOU SELL THE CRAFT.

General Information – 1

This manual has been compiled to help you to operate your boat with safety and pleasure. It contains details of the vessel, the equipment supplied or fitted, its systems and information on its operation and maintenance. Please read it carefully, and familiarize yourself with the boat before using it.

If this is your first boat or if you are changing to a type of boat you are not familiar with, for your own comfort and safety, please ensure that you obtain handling and operation experience before "assuming command" of the boat. Your dealer, or U.S. Coast Guard Auxiliary or yacht club will be pleased to advise you of local sea schools, or competent instructors.

YOU AND YOUR NEW BOAT

Congratulations on your new boat and welcome to the Wellcraft family. We want you to receive the most enjoyment possible from your new boat, and the more you know about it, the easier that will be.

It is important that you take the time to read this entire manual prior to taking your boat out for the first time. Also read all literature supplied with your boat by the manufacturers of the various components and accessories which are used on your boat. In particular, you want to become familiar with operating your engine. This owner's manual does not supersede or change any of the original manufacturers' specifications, operation or maintenance instructions.

If you are new to boating, you may not be familiar with some common boating terms. **Figure 1.1** lists some of these terms and identifies their meaning in relation to a typical boat.

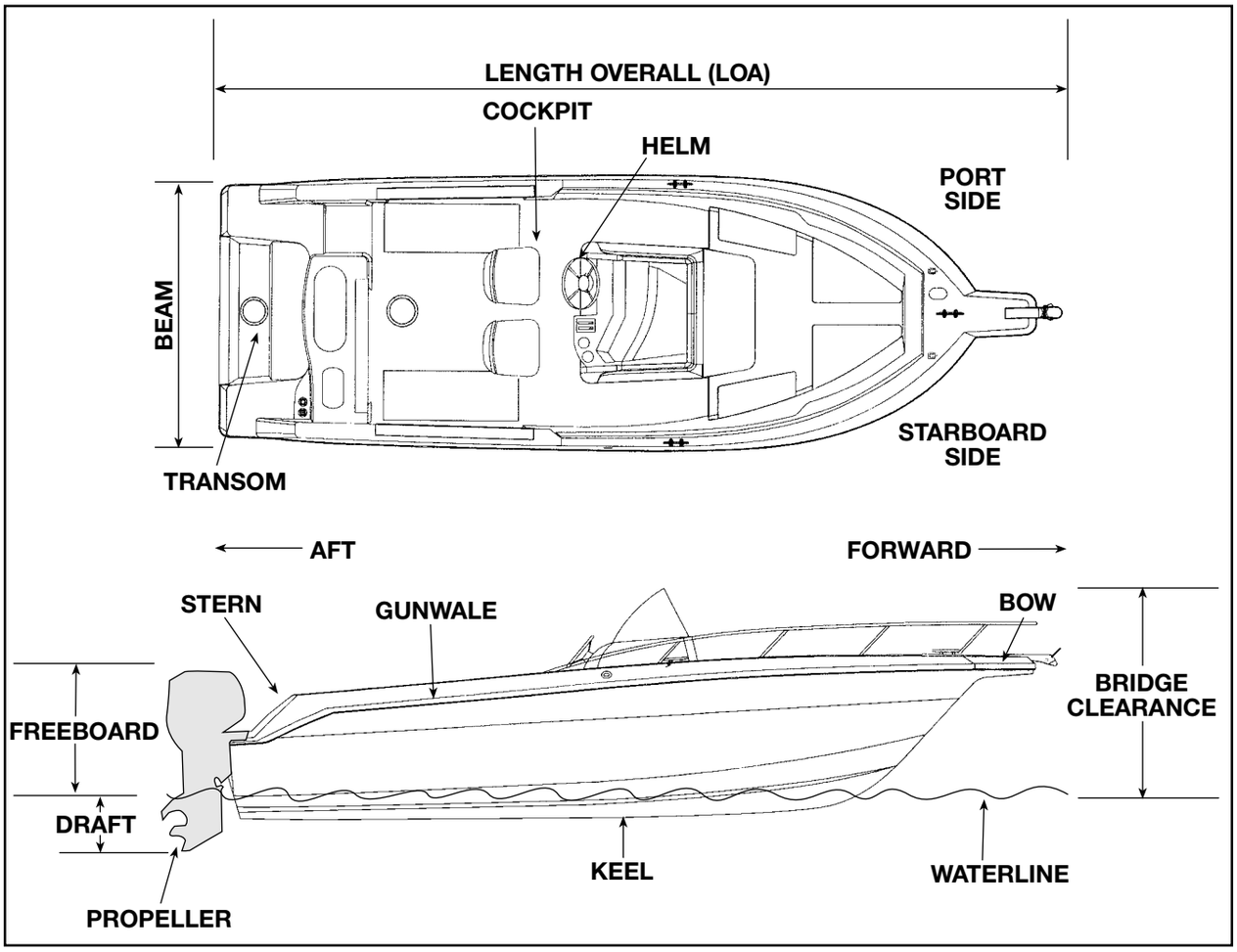

FIGURE 1.1 TERMINOLOGY

Review and train your self and your family in safety, emergency and operating procedures. Pay close attention to all highlighted safety warnings, cautions and hazards, and remember that along with the freedom and fun of a power-boat, comes the responsibility for the safety of your passengers, other boaters and the environment which we all share. We recommend that you read the boating literature published by your state boating agency and the U.S. Coast Guard. Other suggested reading can be found at the end of this section.

Also, take the time to know your boat. Look it over, walk around in it, locate the different components, gauges, and operating equipment and figure out how to use them before you go out on the water. This familiarity allows for a much safer and smoother boating experience.

CONSTRUCTION STANDARDS

All our boats meet or exceed the construction standards set by the U.S. Coast Guard and the American Boat and Yacht Council (ABYC) concerning:

- Navigational lights
- Factory installed fuel systems
- Engine and fuel tank compartment ventilation
- Flotation
- Steering systems
- Backfire flame arresters

We recommend that you see your dealer if you wish to modify factory-installed equipment or add new equipment. Your dealer is qualified to make such modifications or additions without placing the safety or design integrity of your boat at risk and without invalidating the warranty.

RESPONSIBILITIES

Boat Owner

1. Sign the warranty registration card including your address and the boat and hull serial numbers and mail it to us.

2. Inspect the boat at the time of delivery to verify that all systems and components are operating safely and acceptably. Read all manuals and instructions.

3. Operate all equipment in compliance with the manufacturer's instructions.

4. Review the pre-delivery checklist for the boat and engine with your dealer when you take delivery.

5. Schedule your 20-hour boat and engine checkup with your dealer.

6. Know your boat and the rules of the road before you use your boat.

WARRANTY REGISTRATION CARD

RETURN THIS PORTION OF FORM TO MANUFACTURER

IMPORTANT: In order to validate your warranty and comply with the Federal law requiring boat manufacturers to keep a permanent record of owners' names and addresses, it is necessary that this card be completed, mailed and received within 15 days from date of purchase.

Owner's Name _____ **Telephone (** ____ **)** _____

Address _____

City _____ **State/Province** _____ **Country** _____ **Zip** _____

Hull Serial Number

Year and Model

Engine(s)

I HAVE READ AND UNDERSTAND THE MANUFACTURER'S LIMITED WARRANTY AS IT APPEARS ON REVERSE SIDE OF THIS CARD.

DATE PURCHASED X OWNER'S SIGNATURE

IMPORTANT: Make sure that your dealer checks the engine alignment during your boat's 20-hour checkup. The engine alignment check should be performed in accordance with the recommended procedures as stated by the engine manufacturer in your engine owner's manual. Failure to do so could result in drive train damage which is not covered under the warranty.

7. We recommend that you reference your engine warranty certificate for initial inspection and service requirements.

8. Perform or provide for the scheduled maintenance checks outlined in this manual and all related service guides and manuals.

Along with boating, comes responsibility. Responsibility for safety, boating laws, and the environment. Please think about the future of our waterways, oceans and marine life while you're out enjoying them and take all necessary measures to help protect what natural habitats we have left. Keeping our waterways and marine habitats free from debris, and showing consideration for the creatures who thrive in these environments are some ways you can help assure the pleasure of boating for years to come.

The operator is also responsible for complying with the following procedures and operational requirements:

- State registration
- Insurance
- Warranty registration
- Warranty terms and conditions
- Rules of the road
- Break-in procedure
- Proper maintenance of the boat and its systems
- Safety equipment
- Safety training of passengers and crew
- Knowledge of boat systems
- Seaworthiness/operational inspection
- Safe operating practices
- Avoiding use of drugs/alcohol
- Environmental regulations
- Accident reports

Dealer

Your dealer will complete the pre-delivery checklist with you when you take delivery of your boat. A copy of the checklist is at the end of this section. Your dealer will also provide the following services:

1. Sign the checklist to certify that your boat is in top-notch condition and that all components are working properly.

2. Discuss the terms of all warranties and emphasize the importance of registering each warranty with the manufacturer.

3. Explain the proper procedures for obtaining warranty service.

4. If requested, provide you with comprehensive instruction in the operation of your boat and all its installed systems and components.

WARRANTY

The Limited Warranty, in its entirety, appears on the warranty registration card and is included at the end of this chapter. We have made every effort to simplify our warranty so that it may be easily understood. However, if you have any questions regarding the warranty please don't hesitate to contact us.

Wellcraft Marine Corp.
Attn: Customer Service
1651 Whitfield Avenue
Sarasota, FL 34243
Phone: (941) 753-7811

NOTE: There are items which are **<u>not covered</u>** by this warranty, including:

- Incidental and consequential damages (storage charges, telephone or rental charges of any type, inconvenience or loss of time or income.)

- Damage caused by neglect, lack of maintenance, accident, abnormal operation, improper installation or service.

- Haul-out, launch and towing charges.

- Transportation charges and/or travel time to and from a repair facility.

- Travel time to customer's home or marina.

- Service requested by customer other than that necessary to satisfy the warranty obligation.

- Oils, lubricants or fluids used in normal maintenance.

- Air freight, next-day or second-day air, or any special delivery fees unless pre-approved.

- Gelcoat cracking, yellowing, crazing or blistering, plexiglas, canvas, vinyl or tape **unless noted on equipment check off list** at time of delivery.

- Engines, drive trains, controls, props, batteries, or other equipment or accessories carrying their own individual warranties.

- It is important to note that on many of the components in our boats, i.e. stoves, refrigerators, generators, trim tabs, etc., the warranties are extended by the component manufacturer. (Most component manufacturers repair or replace the defective component if it is returned to them.) The customer is responsible for all travel time, freight, or postage costs. We will pay for the cost to remove and replace the component.

- Engines, parts or accessories not installed by Wellcraft Marine Corp.

- Plexiglas windscreen breakage, rainwater leakage through convertible tops, minor gelcoat discoloration, cracks, crazing, or air voids.

- Windshield and canvas top leakage: A certain amount of leakage can occur at the fasteners and at the stitching.

- Minor gelcoat discoloration or chalking may occur if regular washing and waxing has been neglected. Proper care of the gelcoat finish is the responsibility of the owner.

- Hull blisters that form below the waterline: Osmosis blistering is not covered by our limited warranty. The phenomenon is most likely to occur in warm, fresh water. However, it can also occur in saltwater. Any boat left in the water for any period of time is susceptible. Nearly all the marine bottom paint manufacturers today offer coatings that help protect the hull against osmosis blistering. **We highly recommend that you add a protective coating to your hull.**

- Normal deterioration, i.e. wear, tear, or corrosion of hardware, vinyl tops, vinyl and fabric upholstery, plastic, metal, wood, or trim tape.

- Hardware: Metal hardware that has rusted or pitted will not be replaced under warranty. You should keep this hardware clean and wiped down with a light oil (WD40).

- Vinyl tops: Wellcraft does not warrant damage that might occur when a boat is being towed on a trailer with the top up, and does not warrant shrinkage, mildew, or other normal deterioration.

- Any boat used for commercial purposes: This includes boats used for charter purposes or time-share.

- Any defect caused by failure of the customer to provide reasonable care and maintenance.

By signing the warranty registration card you, the new owner, indicate an understanding of the terms and conditions of the Limited Warranty. The warranty registration card should be properly completed by the dealer, signed by the new owner, and returned to us within fifteen (15) days after the original purchase in order to validate the warranty. Be sure to keep the Owner's Registration Card for your records.

All boat manufacturers are required by The Federal Boat Safety Act of 1971 to notify first time owners in the event any defect is discovered "which creates a substantial risk of personal injury to the public." In order for us to comply with that law, if it becomes necessary, it is essential that your warranty registration card with the owner's name, address, and boat serial number be completed and mailed to Wellcraft Marine, 1651 Whitfield Ave., Sarasota, Florida 34243.

The limited warranty for your boat is transferable and can be extended to the next purchaser for the remainder of the warranty period by notifying Wellcraft Marine in writing within 15 days of the transfer, by using the warranty registration transfer form found at the end of this chapter. The transfer request must be accompanied by a copy of the title/registration and the transfer fee as determined by the boat length overall:

BOAT LENGTH OVERALL	TRANSFER FEE
Up to 21'	$200.00
Over 21' to 26'	$300.00
Over 26'	$500.00

WARRANTY SERVICE

As the owner, you are responsible for the proper registration of your boat at the time of pur-

chase. You must also follow proper operation procedures and adhere to the care and maintenance procedures set for th in this manual. Be sure to read your boat' s warranty, as well as the information and warranties (provided in your owner's portfolio) for major components. You are responsible for notifying your dealer in writing of any claimed defect within a reasonable period of time and returning your boat to your dealer for service.

Your dealer has been carefully selected to assist you with your sales and service needs. Your dealer will be glad to answer any of your questions about your new boat. The dealer has a direct interest in you as a customer and wants to see that you are completely satisfied with your purchase. The dealer is in the best position to help you and has full support and assistance from Wellcraft Marine.

If, for any reason, you are dissatisfied with the services performed by your dealer, we suggest that you discuss the matter with the service manager. The service manager is responsible for the quality of service being performed and has a direct interest in your satisfaction. If the matter is complicated and cannot be resolved to your satisfaction by the service manager, we suggest that you talk to the general manager or owner. In most cases a compromise can be reached.

If the matter cannot be resolved by the dealership to your satisfaction, contact the Wellcraft Marine Customer Service Department by calling (941) 753-7811 or by writing to:

Wellcraft Marine Corp.
Customer Service Department
1651 Whitfield Avenue
Sarasota, FL 34243

Have the following information available:

- HIN (hull identification number)
- Selling dealer's name and location
- Date of purchase
- Servicing dealer (if different from selling dealer)
- Nature of problem
- Names of dealership personnel involved with the situation
- Record of service performed and approximate dates

When contacting Wellcraft Marine, keep in mind that your problem will most likely be resolved at the dealership, using the dealership's facilities, equipment, and personnel.

OWNER'S PORTFOLIO

Some manufacturers of components such as the engine and AM/FM stereo supply their own instruction manuals which are included in your water-resistant "Important Ship's Papers." The information in the component instruction manuals may be different from the information in this manual because of product improvements. If you notice a discrepancy, ALWAYS FOLLOW THE INSTRUCTIONS IN THE SUPPLIER'S MANUAL. Additionally, the suppliers of these products maintain their own manufacturer's warranty and service facilities. To register your ownership, fill out and mail each warranty card. Use your Owner's Portfolio to retain instructions and data on additional equipment or accessories installed after delivery.

IMPORTANT: Operation, maintenance and safety information is outlined by the manufacturer of most installed equipment. Properly operating and maintaining the equipment on your boat will help you to enjoy many years of SAFE boating.

OWNER'S LOGS AND RECORDS

At the end of this chapter are several forms which you will find very helpful.

Use the **Boat Data Record** to record all important information about your boats and the major components installed. After you have entered all the data, remove this form from your Owner's Manual and store in a safe place. **Do not** keep this form aboard your boat.

The **Float Plan** provides a record of your destination, departure and return times, boat description, passenger list, and other information about the trip you have planned. At the bottom of the form is space for listing emergency telephone numbers in case your return is delayed past the expected time. It also has space for indicating information about the person filing this report. Leave the completed form ashore with a responsible person. We recommend you make several copies of this form each boating season to assure an ample supply.

The **Fuel Log** is a handy way to record information covering engine hours, fuel consumption, miles traveled, as well as RPM (revolutions per minutes), Average mph (miles per hour), and gph (gallons per hour).

The **Service/Maintenance Log** provides a record of maintenance work completed on your boat, the date of completion and the engine hour reading. This log will also help you identify the frequency of routine maintenance work, such as engine oil changes. If you should decide to sell your boat, it will demonstrate to prospective buyers that you have done a good job of taking care of your boat.

BOATING LAWS AND REGULATIONS

The U.S. Coast Guard is the authority of the waterways; they are there to help the boating public. State boating regulations are enforced by local authorities. You are subject to marine traffic laws and "Rules of the Road" for both federal and state waterways; you must stop if signaled to do so by enforcement officers, and permit to be boarded if asked.

There are many pamphlets, prepared by the Coast Guard, available to you. These pamphlets explain "Rules of the Road," signal lights, buoys, safety, international and inland regulations and other information which goes beyond the scope of this manual. For more information contact your local U.S. Coast Guard Unit or call the Coast Guard Boating Safety Hotline at 1-800-368-5647.

BOAT OWNER REGISTRATION

Federal and state laws require that every boat equipped with propulsion machinery of any type must be registered in the primary state of usage. Registration numbers and validation stickers must be displayed on the boat according to regulations. In most states, this means registration with the designated state agency. In a few jurisdictions, the Coast Guard retains registration authority. Your dealer will either supply registration forms or tell you where they may be obtained. The registration agency will issue you a certificate that must be carried on board when the boat is in use. Some states require additional registration when an out of state boat is used within their boundaries.

Your boat has a hull identification number on the starboard side of the hull. **Figure 1.2** shows a typical identification number. Use this hull identification number for registration and to identify your boat for warranty service.

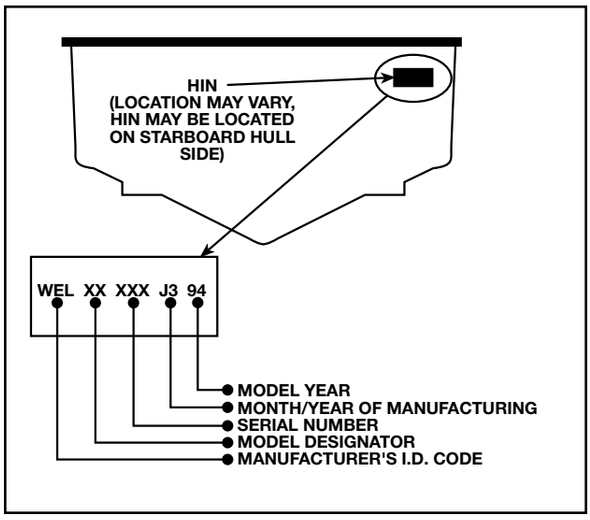

FIGURE 1.2 HIN

INSURANCE

In most states, the boat owner is legally responsible for damages or injuries he or she causes, even if someone else is operating the boat at the time of the accident. Common sense dictates that you carry adequate personal liability and property damage insurance on your boat, just as you would on an automobile. You should also protect your investment by insuring your boat against physical damage or theft.

ACCIDENT REPORTING

The operator of the boat is responsible for filing a report with the appropriate authorities. In general, reports are necessary for accidents involving loss of life, injury, or damage over $500. In the case of accidents with reportable injuries or death, a formal report is required within 48 hours. If only property damage is involved, a report must be made within ten days. The 1994 Recreational Boating Act may impose a $1,000 civil fine for people who fail to submit a boating accident report. Ask your insurance agent for more information.

If you see a distress signal, you must assume it is a real emergency and render assistance immediately. The master or person in charge of a boat is obligated by law to provide assistance to any individual in danger at sea. However, you should not put your boat or crew in a dangerous situation which exceeds your capabilities or those of your boat. The 1971 Boating Safety Act grants protection to a Good Samaritan boater offering good faith assistance, and absolves a boater from any civil liability arising from assistance given.

DISCHARGE OF OIL

The Federal Water Pollution Control Act prohibits the discharge of oil or oily waste into or upon the navigable waters of the United States or the waters of the contiguous zone if such discharge causes a film or sheen upon or a discoloration of the surface of the water or causes a sludge or emulsion beneath the surface of the water. Violators are subject to a penalty of $5,000.

DISPOSAL OF PLASTICS & OTHER GARBAGE

Plastic refuse dumped in the water can kill fish and marine wildlife and can foul boat propellers and cooling water intakes. Other forms of waterborne garbage can litter our beaches and make people sick. U.S. Coast Guard regulations prohibit the dumping of plastic refuse or other garbage mixed with plastic into the water anywhere, and restrict the dumping of other forms of garbage within specified distances from shore.

MARPOL TREATY

Boats 26 feet or longer must display a sign stating the disposal regulations of the Federal Water Pollution Control Act. The U.S. Coast Guard has issued these regulations to implement Annex V of the International Convention for the Prevention of Pollution from Ships, 1973, commonly known as Annex V of the MARPOL (Marine Pollution) Treaty 73/78. They apply to all U.S. boats wherever they operate (except waters under the exclusive jurisdiction of a State) and foreign boats operating in U.S. waters out to and including the Exclusive Economic Zone (200 miles). It is important to know these regulations and adhere to them.

The regulations require U.S. recreational boaters, if your boat is 26 feet or more in length, to affix one or more USCG Trash Dumping Restrictions placards to your boat. The placard warns against the discharge of plastic and other forms of garbage within the navigable waters of the United States and specify discharge restrictions beyond the territorial sea. (The territorial sea generally ends three nautical miles from the seashore.) In addition, the placard must contain the warning that a person who violates these requirements is liable to civil ($25,000) and criminal (imprisonment) penalties. The placard also must note that State and local regulations may further restrict the disposal of garbage.

Operators shall display one or more placards in a prominent location and in sufficient numbers so they can be observed and read by crew and passengers. These locations might include embarkation points, food service areas, galleys, garbage handling spaces and common deck spaces frequented by crew and passengers. We recommend that these placards be installed on all boats. The placards may be purchased from local marinas, boat dealerships and marine equipment suppliers. A special placard is available for boats operating on the Great Lakes.

IMPORTANT: It is illegal to discharge waste from your marine sanitary device (toilet) into the water in most areas. It is your responsibility to be aware of and adhere to all local laws concerning waste discharge. Consult with the Coast Guard, local marina or your dealer for additional information.

NOTE: Some states and localities have legal limits on speed, noise and trailer specifications. It is your responsibility to be aware of these laws and limits and to insure that your boat (and trailer) comply. Consult with your local Marine Patrol or local Coast Guard office.

RECOMMENDED READING

Damford, Don. *Anchoring*. (ISBN 0-915160-64-1). Seven Seas.

United States Coast Guard Auxiliary. *Boating Skills and Seamanship*. LC74-164688. (illus.). (ISBN 0-930028-00-7). U.S. Coast Guard.

Bottomley, Tom. *Boatman's Handbook*, (illus.). 316 p. pap. (ISBN 0-688-03925-1, Hearst Marine Bk.). Morrow.

Whiting, John and Bottomley, Tom. *Chapman's Log and Owner's Manual*. 192 p. (ISBN 0-87851-801-0); (ISBN 0-686-96737-2). Hearst Bks.

Strahm, Virgil. *Does Your Fiberglass Boat Need Repair?* LC81-90093. (illus.). 46 p. pap (ISBN 0-9606050-0-2). Strahm.

Chapman, Charles F. and Maloney. E.S. *Chapman's Piloting, Seamanship and Small Boat Handling*. (illus.) 62 p. (ISBN 0-87851-814-2, Pub. by Hearst Bks.); deluxe ed. (ISBN 0-87851-815-0). Morrow

National Fire Protection Association. *Fire Protection Standard for Pleasure and Commercial Motor Craft*. (ISBN 0-317-07388-5, NFPA 302). Natl. Fire Prot.

Brotherton, Miner. *Twelve-Volt Bible*. Plastic comb. (ISBN 0-915160-81-1). Seven Seas.

CONTACTS

Education programs are sponsored by publications and organizations such as the U.S. Power Squadron, U.S. Coast Guard Auxiliary and The American Red Cross. See your dealer about special courses available in your area. For detailed information contact:

American Red Cross (For local address consult the telephone directory).

Boat U.S. Foundation for Boating Safety Hotline
1-800-336-BOAT
1-800-245-BOAT (in Virginia)
Coast Guard Boating Safety Hotline
1-800-368-5647

Skippers Course
GPO Superintendent of Documents
Washington, DC 20012

United States Coast Guard Auxiliary
Local Flotilla or contact appropriate Coast Guard District Headquarters

United States Coast Guard Headquarters
202-512-1800
202-512-2250 (fax)

United States Power Squadron
P.O. Box 30423
Raleigh, NC 27617

WELLCRAFT LIMITED WARRANTY

2004 Model Year Limited Warranty

Wellcraft, warrants to you, the first North American retail purchaser of this 2004 model year boat, that it will repair or replace defects in materials or workmanship it finds to its satisfaction to occur within the applicable warranty periods, subject to the what "This Warranty Does Not Cover" section set forth below.

For boats sold at retail more than twelve (12) months after delivery at the dealership, you will be entitled only to the coverage as stated in the Wellcraft Limited Warranty–Level II. See your Wellcraft dealer for a copy. All other terms and conditions of this warranty will apply. All warranties run concurrently from the date of delivery to you.

Defects in non-structural parts and components: One (1) year Warranty Period.

Defects in structural components of the deck and liner: Five (5) year Warranty Period.

Defects in structural components of the hull, stringer and transom (all models except Wellcraft 330, 350, 390, or 400 Coastal models): Ten (10) year Warranty Period.

Defects in structural components of the hull, stringer and transom (Wellcraft 330, 350, 390, or 400 Coastal models only): Five (5) year Warranty Period.

Your sole and exclusive remedy is the repair or replacement, at Wellcraft's sole option, of parts and components covered by this warranty.

This Wellcraft boat, including any alleged defective part, must be returned to an authorized Wellcraft dealer within the applicable warranty period to obtain warranty service. The Wellcraft dealer will carry out the warranty procedures on the owner's behalf. All warranty work will be performed at an authorized dealer, at the Wellcraft factory, or at another repair facility that Wellcraft selects. The owner is responsible for the expense associated with transporting the boat to and from the repair facility.

Coverage remaining under the Warranty Periods may be transferred by an authorized Wellcraft dealer to a 2nd purchaser for an established fee. The transfer must occur within five (5) years of the original retail sale. The transfer fee must be paid within 15 days of purchase of the used boat to transfer the warranty. Proof of purchase date is required. The warranty may only be transferred **once**. Wellcraft reserves the right to reject a warranty transfer request for a Wellcraft boat that has been damaged, neglected, or otherwise previously excluded from warranty. Wellcraft will confirm all warranty transfers in writing to the dealer and the second owner.

An action for breach of warranty shall be barred unless it is commenced within four (4) years from the date the cause of action accrues. An action for breach of any duty or obligation to repair or replace shall be barred unless it is commenced within one year from the date the cause of action accrues regardless of the time remaining in the Warranty Period.

This Warranty **DOES NOT COVER:**

1. A boat purchased from any party other than an authorized Wellcraft dealer.
2. A boat, including its components that has been altered or modified so as to adversely affect its operation, performance or durability.
3. Engines, outdrive, controls, propellers, batteries, appliances and other equipment or accessories which are not manufactured by Wellcraft, whether or not warranted by other manufacturers.
4. Gelcoat finishes (including blistering and osmotic blistering, cracking crazing or discoloration), mirrors, window glass, varnishes, paints, fabrics, chromium plated and stainless steel finishes, because of the varying effects resulting from different climatic and use conditions.
5. The cost of removal or re-instatement of parts or disassembly of units to repair or replace components covered by this warranty.
6. Any boat which has been misused, used in a negligent manner, used for racing, used for rental, charter, military or other commercial purposes, used without normal maintenance, operated contrary to any instruction furnished by Wellcraft, or operated in violation of any Federal, State, Coast Guard or other governmental agency laws, rules or regulations.
7. Any representation relating to speed, range, fuel consumption or other estimated performance characteristic.
8. Loss of time, inconvenience, boat payments, retail charges, improper lifting or trailering, travel expense, loss of use, in-and-out-of-water charges, towing and storage charges, loss of or damage to personal property, or other remedies not specifically allowed.
9. Dealer preparation, cleaning, final adjustments and alignments in preparing the boat for delivery or commissioning.
10. Leakage around windshield, hatches or other designed openings.
11. Fit and adjustment of exterior canvas tops, enclosures, and weather covers.
12. Sacrificial deterioration of anti-fouling paint or zinc anodes.

Remedy under this warranty is expressly limited to repair or replacement of defects in materials or workmanship, **and does not include incidental or consequential damages** that are specifically **DISCLAIMED**. Note: SOME STATES DO NOT ALLOW THE EXCLUSION OR LIMITATION OF INCIDENTIAL OR CONSEQUENTIAL DAMAGES, SO THE ABOVE LIMITATION OR EXCLUSION MAY NOT APPLY TO YOU. The express limited warranty described above is exclusive. **IMPLIED WARANTIES** are **LIMITED IN THEIR DURATION TO ONE (1) YEAR FROM THE DATE OF PURCHASE.** ALL IMPLIED WARRANTIES, if any, INCLUDING **MERCHANTABILITY and FITNESS FOR A PARTICULAR PURPOSE ARE DISCLAIMED** IN THEIR ENTIRETY AFTER ONE (1) YEAR FROM THE DATE OF PURCHASE. There are no warranties which extend beyond the description on the face hereof. **NOTE**: SOME STATES TO NOT ALLOW LIMITATION ON HOW LONG AN IMPLIED WARRANTY LASTS, SO THE ABOVE LIMITATION MAY NOT APPLY TO YOU. THIS WARRANTY GIVES YOU SPECIFIC LEGAL RIGHTS THAT VARY FROM STATE TO STATE.

This document contains the entire warranty given by Wellcraft. Wellcraft does not authorize any person or persons, including Wellcraft dealers, to change the terms of this express limited warranty, which is Wellcraft's only warranty. Wellcraft reserves the right to change or improve the design or manufacture of Wellcraft boats without obligation to modify any boat previously manufactured.

Wellcraft • 1651 Whitfield Avenue • Sarasota, FL 34243 • 941.753.7811

PRE-DELIVERY CHECKLIST FOR: _____ _____

HULL SERIAL NUMBER MODEL

☐ WELLCRAFT STERN DRIVE & OUTBOARD

BEFORE LAUNCHING:

☐ 1. Inspect all thru-hull fittings, tight and sealed
☐ 2. Connections to thru-hull fittings (interior)
☐ 3. Drain plugs installed (hull, engines, cooling system)
☐ 4. Drive unit(s) installed, oil level(s) checked
☐ 5. Check tie bar for alignment of twin engines
☐ 6. Check engine(s) for proper alignment
☐ 7. Install speedometer pitot tube
☐ 8. Steering (proper direction, full travel, tightness)
☐ 9. Propellers installed (R.H. stbd., L.H. port) check size
☐ 10. Gas vents clear
☐ 11. Bilge clean, limber holes open
☐ 12. Water hose test for leaks (windows, doors, hatches)

AFTER LAUNCHING:

13. Check for leaks
☐ A. Thru-hull fittings
☐ B. Sea-cocks (if applicable)
14. Electrical equipment operation
☐ A. 12Vdc
☐ B. 120Vac
☐ 15. Fuel system (check for leaks)
☐ 16. Steering action, free movement, no binding

BEFORE OPERATION OF ENGINES:

☐ 17. Wiring connections tight
☐ 18. Hose connections tight, no leaks
☐ 19. Throttle cable travel, tension
☐ 20. Open sea cocks
☐ 21. Check all fluid levels (engine(s)
☐ 22. Fuel shut-off valves open

Operate blower at least 5 minutes & check bilge for gas fumes

AFTER STARTING ENGINES:

☐ 23. Exhaust water flow
☐ 24. Fuel system leaks (gauges read correctly)
☐ 25. Cooling system leaks
☐ 26. Adjust idle speed (600-700 RPM in gear)
☐ 27. Shift thru gears (full travel) — must reach detents
☐ 28. All engine gauges function correctly
☐ 29. Fill out engine pre-delivery forms (if applicable)
☐ 30. Check ignition interrupter switches (if applicable)

WATER TEST:

☐ 31. Sgl./Stbd. Engine _____ RPM (top - trimmed)
☐ 32. Port engine _____ RPM (top - trimmed)
☐ 33. Steering control
☐ 34. Trim tab operation (if applicable)
☐ 35. Accessories (lights, wipers, pumps, etc.)

FINAL: ACCESSORIES

☐ 36. A/C pump
☐ 37. A/C compressor
☐ 38. Generator
☐ 39. Marine head, macerator pump & holding tank
☐ 40. Canvas
☐ 41. Converter (battery charger)
☐ 42. Appliances (stove, microwave, refrig., stereo, etc.)
☐ 43. Water (pressure) system/hot water tank
☐ 44. Bait well aerators (if applicable)
☐ 45. All manuals and warranties packed aboard

☐ WELLCRAFT INBOARD

BEFORE LAUNCHING

☐ 1. Inspect all thru-hull fittings, tight and sealed
☐ 2. Connections to thru-hull fittings (interior)
☐ 3. Drain plugs installed (hull, engines, cooling system)
☐ 4. Propellers installed (R.H. Stbd., L.H. port) check size
☐ 5. Propeller shafts turn free
☐ 6. Rudder Alignment, connection tight
☐ 7. Prop shaft aligned properly in shaft log
☐ 8. Strut properly aligned, shaft running squarely through cutlass bearing
☐ 9. Zincs installed
☐ 10. Gas vents clear
☐ 11. Bilge clean, limber holes open
☐ 12. Water hose test for leaks (windows, doors, hatches)

AFTER LAUNCHING:

13. Check for leaks
☐ A. Thru-hull fittings
☐ B. Sea-cocks (if applicable)
☐ C. Prop shaft packing glands
☐ D. Rudder shaft packing glands
☐ 14. Check propeller shaft coupling alignment (.003" max.)
☐ 15. Bend lock tabs on engine mounts
☐ 16. Electrical equipment operation
☐ A. 12Vdc ☐ B. 120Vac ☐ C. 220Vac
☐ 17. Fuel system (check for leaks)
☐ 18. Steering action, free movement, no binding

BEFORE OPERATION OF ENGINES:

☐ 19. Wiring connections tight
☐ 20. Hose connections tight, no leaks
☐ 21. Coolant level (closed cooling system)
☐ 22. Throttle cable travel, tension
☐ 23. Transmission cable travel
☐ 24. Open sea cocks
☐ 25. Check all fluid levels (engine(s)

Operate blower at least 5 minutes & check bilge for gas fumes

AFTER STARTING ENGINES:

☐ 26. Exhaust water flow
☐ 27. Fuel system leaks (gauges read correctly)
☐ 28. Cooling system leaks
☐ 29. Engine water temperature (after warm-up)
☐ 30 Adjust idle speed (600-700 RPM in gear)
☐ 31. Shift thru gears (full travel — must reach detents)
☐ 32. All engine gauges function correctly
☐ 33. Fill out engine pre-delivery forms (if applicable)

WATER TEST:

☐ 34. Stbd. engine RPM _____ (top)
☐ 35. Port engine RPM _____ (top)
☐ 36. Steering control
☐ 37. Trim tab operation (if applicable)
☐ 38. Accessories (lights, wipers, pumps, etc.)
☐ 39. Re-Check shaft alignment after 72 hours in water (see 14 above)

FINAL: ACCESSORIES

☐ 40. A/C pump ☐ 41. A/C compressor
☐ 42. Generator ☐ 43. Canvas
☐ 44. Marine head, macerator pump and holding tank
☐ 45. Converter (battery charger)
☐ 46. Appliances (stove, microwave, refrig., stereo, etc.)
☐ 47. Water pressure system and hot water tank
☐ 48. All manuals and warranties packed aboard

PREDELCK/JW/0693

CUSTOMER DELIVERY: (To be filled in at time of delivery)

☐ Boat and engine(s) pre-delivery check list complete
☐ Operation and maintenance manuals provided
☐ Warranty(s) explained and form(s) completed
☐ Required Coast Guard equipment on board

Operation of equipment explained:
☐ Boat ☐ Engine(s)
☐ Accessories ☐ Trailer (if applicable)

Dealer Name: _____
Account #: _____

Dealer Signature _____ Customer Signature _____ Date: _____

Return to: WELLCRAFT MARINE (Warranty Department) 1651 Whitfield Avenue • Sarasota, FL 34243

SERVICE/MAINTENANCE LOG

DATE	HOUR METER READING	SERVICE/REPAIRS PERFORMED

BOAT DATA SHEET

Wellcraft Model Name _____ Hull Identification Number _____

Name of Boat _____ State _____ Length _____ Beam _____

Hull Color(s) _____ Weight _____

Draft (Drive Down) _____ (Drive Up) _____ Freeboard (Forward) _____ (Aft) _____

Engine(s)

Make _____ Model Name _____ H.P. _____ Model No. _____

Port Serial No. _____

Starboard Serial No. _____

Fuel Tank Capacity _____ Fuel Filter No. _____

Water Tank Capacity _____

Radio

Make _____ Type _____ Model No. _____ Serial No. _____

Battery Make _____ Type _____

Propeller(s) Manufacturer _____ Diameter/Pitch _____ / _____

No. of Blades _____ Style _____ Material _____ Mfg. Part No. _____

Key Numbers Cabin _____ Glove Box _____ Ignition Switch(s) _____ _____

Other Equipment

_____

_____

_____

Selling Dealer

Name _____

Address _____

Phone No. _____

Salesman _____

Servicing Dealer

Name _____

Address _____

Phone No. _____

Service Manager _____

FUEL LOG

DATE	HOURS RUN	FUEL (GAL)	RANGE (MI)	RPM	MPH	GPH

FLOAT PLAN

Copy this page and fill out the copy before going boating. Leave the completed copy with a reliable person who can be depended upon to notify the Coast Guard, or other rescue organization, should you not return as scheduled. DO NOT file this plan with the Coast Guard.

Name _____ Telephone _____

Description of Boat: Type _____ Color _____ Trim _____

Registration Number _____

Length _____ Name _____ Make _____

Wellcraft Hull Identification Number _____

Other Info. _____

Persons Aboard: **Name**	**Age**	**Address**	**Telephone**

Engine Type: _____ HP _____

No. of Engines: _____ Fuel Capacity: _____

Survival Equipment:

PFDs _____ Flares _____ Mirror _____

Smoke Signals _____ Flashlight _____ Food _____

Paddles _____ Water _____ Anchor _____

Raft or Dinghy _____ EPIRB _____ Sea Anchor _____

Navigation Equipment

Compass _____ Loran _____ GPS _____ Radar _____

Radio: Yes ____ No ____ Type _____ Freq _____

Phone: Yes ____ No ____ Phone No. _____

Destination _____ Est. Time of Arrival _____

Expect to Return By _____

Auto Type _____ License No. _____ Where _____

If not returned by _____ call the Coast Guard, or _____
(Local Marine Authority)

Coast Guard Telephone Number: _____

Local Marine Authority Telephone Number: _____

WELLCRAFT MARINE CORP., 1651 Whitfield Avenue, Sarasota, Florida 34243 Phone (941) 753-7811

WARRANTY REGISTRATION TRANSFER REQUEST

Original Owner Name & Address: _____

_____

_____

Original Date of Purchase: _____

Hull Identification Number: _____

Boat Model: _____

Selling Dealer: _____

Name and address of new purchaser: _____

_____

_____

Telephone Number: _____

Date of Purchase: _____

1995-1998 Model year transfer fee: $100.00 all models.

1999 Model year transfer fees:

16' - 21' Boats	$200.00
22' - 26' Boats	$300.00
27' and up Boats	$500.00

This transfer request must be accompanied by the applicable transfer fee and a copy of the new owner's title/registration. Warranty transfers must be received within 15 days of the subsequent purchase to be valid. Coverage remaining under the warranty periods may be transferred once by an authorized Wellcraft dealer to a second purchaser.

This warranty registration request, if accepted, transfers the warranty coverage remaining on the boat to the new purchaser. Acceptance of the request does not create any additional warranties or obligation on Wellcraft.

Warranty Expiration Date: _____

Wellcraft Transfer Acceptance Date: _____

Wellcraft Authorized Signature: _____

Mail to Wellcraft Marine, 1651 Whitfield Ave., Sarasota, FL 34243, Attn: Customer Service Department.

WELLCRAFT MARINE CORP.

Boating Safety – 2

The popularity of boating and other water sports has undergone an explosion of growth in the past few years. Because of this, safety is an important issue for everyone who shares our waterways.

Your safety, the safety of your passengers and the safety of other boaters are among your responsibilities as operator of this boat. Your boat must be in compliance with U.S. Coast Guard safety equipment regulations. You should know how to react correctly to adverse weather conditions, have good navigation skills and follow the "Rules of the Road" as defined by the Coast Guard and state/county/local regulations.

Before each outing you should check all safety equipment such as bilge pumps, fire extinguishers, personal flotation devices, flares, distress flags, flashlights, ignition interrupter switch, etc. They should be operable, readily visible and easily accessible.

Complete a float plan and tell someone of your travel plans. Check local weather reports before casting off. Do not leave the dock area when strong winds and electric storms are in the area or predicted to be in the area. A sample float plan is at the end of Section 1.

ADVISORY STATEMENTS

Advisory statements forewarn conditions that affect equipment operation, maintenance and servicing practices, and they have two levels:

NOTE: Signals a general advisory statement that clarifies or highlights a particular section of text.

IMPORTANT: Used to signal the possibility of damage to equipment or associated components.

HAZARD COMMUNICATION

Safety is an important issue for everyone who shares in the use of our waterways. Throughout this manual, specific precautions and symbols identify safety related information.

The Safety Alert Symbol means pay attention! Your safety is involved. Not following the recommendations contained in any of these statements may result in property damage, personal injury or death.

⚠ CAUTION

This symbol and signal word indicate a potentially hazardous situation which, if not avoided, WILL or CAN cause minor or moderate personal injury or property damage if the warning is ignored.

⚠ WARNING

This symbol and signal word indicate a potentially hazardous situation which, if not avoided, CAN cause SERIOUS injury, death or substantial property damage if the warning is ignored.

⚠ DANGER

This symbol and signal word indicate an immediate hazard, which if not avoided, WILL result in SERIOUS personal injury or death.

The precautions listed in this manual are not all-inclusive. If a procedure, method, tool or part is not specifically recommended, you must satisfy yourself that it is safe for you and others and that your boat will not be damaged or made unsafe as a result of your decision. REMEMBER ALWAYS USE COMMON SENSE WHEN BOATING!

SAFE BOATING RECOMMENDATIONS

Boating safety and the safety of your passengers is YOUR responsibility. You should fully understand all of the following safety precautions before you launch your boat.

1. Never operate a boat while under the influence of drugs or alcohol. Doing so is a Federal offense. Make sure only qualified drivers operate your boat.

2. Keep your boat and its equipment in safe operating condition. Regularly inspect the hull, engine, safety equipment and all other boating gear.

3. Keep all lifesaving equipment including fire extinguisher in safe operating condition and in easily accessible locations. All passengers should know where this equipment is and how to use it.

4. Use extreme CAUTION while fueling your boat. Become familiar with the capacity of your boat's fuel tank and fuel consumption for commonly used RPMs. Avoid fueling at night except under well-lit conditions. Gas spills are hard to see in the dark.

5. Keep enough fuel on board for your planned cruising requirements as well as for changes in your plans due to adverse weather or other situations. We recommend the 1/3 rule: use 1/3 of your fuel to reach your destination, use 1/3 to return, and keep 1/3 in reserve.

⚠ WARNING

Each time you fill up, inspect fuel lines for leaks and hose deterioration, and be sure the engine compartment is free of gasoline vapors. Leaking fuel is a fire and explosion hazard and can cause severe injury or death. The use of alcohol modified fuels can cause deterioration of the fuel system.

6. Keep an eye on the weather. Be aware of possible changing conditions by monitoring local weather broadcasts prior to departure. The captain or first mate should personally monitor strong winds and electrical storms.

7. Always keep accurate up-to-date charts of your boating area on board.

8. Before departure file your Float Plan with a responsible person ashore.

9. Always operate your boat with consideration, courtesy and common sense.

10. At least one other passenger aboard should be indoctrinated on the basic operating procedures for handling your boat in the event you unexpectedly become unable to do so.

NOTE: The presence of the boat's maximum capacity plate does not override your responsibility to use common sense or rational judgment. The capacity of your boat is reduced by turbulent water and other adverse weather conditions. You should have prior knowledge of existing water and weather conditions before getting underway.

SAFETY EQUIPMENT

NOTE: As the owner of the boat, you are responsible for supplying a fire extinguisher approved by the U.S. Coast Guard and all other required safety equipment. Check state and local regulations and call the U.S. Coast Guard Boating Safety Hotline at 1-800-368-5647 for information about required safety equipment. You should also consider supplying additional equipment recommended for your safety and that of your passengers. A list of this equipment appears later in this section. Make yourself aware of its availability and its use.

PERSONAL FLOTATION DEVICES (PFDS)

You are required by Federal Regulations to have at least one Coast Guard approved personal flotation device (PFD) for each person in your boat. You may not use your recreational boat unless all your PFD's are in serviceable condition, are readily accessible, legibly marked with the Coast Guard approval number, and are of an appropriate size (within the weight range and chest size marked on the PFD) for each person on board. Your PFD provides buoyancy to help keep your head above the water and to help you remain in a satisfactory position while in the water. **Figures 2.1 through 2.5** show the five types of PFDs approved by the U.S. Coast Guard.

PFD Type I, Wearable, **(Figure 2.1)** has the greatest required buoyancy. Its design allows for turning most unconscious persons in the water from face down position to a vertical or slightly backward, face-up position. Type I is most effective for all waters, especially offshore when rescue may be delayed.

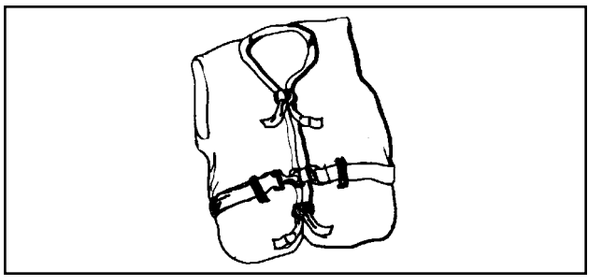

FIGURE 2.1 PFD TYPE I, WEARABLE

PFD Type II, Wearable, **(Figure 2.2)** turns its wearer in the same way as Type I, but not as effectively. The Type II will not turn as many persons under the same conditions as a Type I.

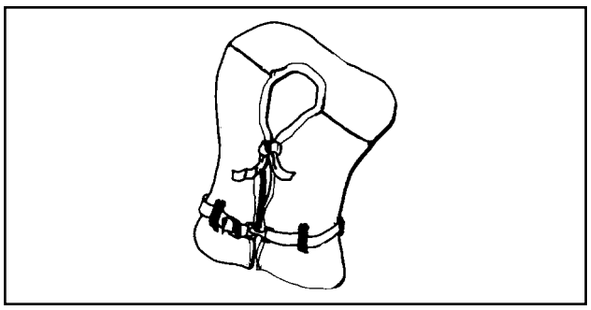

FIGURE 2.2 PFD TYPE II, WEARABLE

PFD Type III, Wearable, **(Figure 2.3)** allows the wearers to place themselves in a vertical or slightly backward position. It has the same buoyancy as a Type II PFD. It has little or no turning ability.

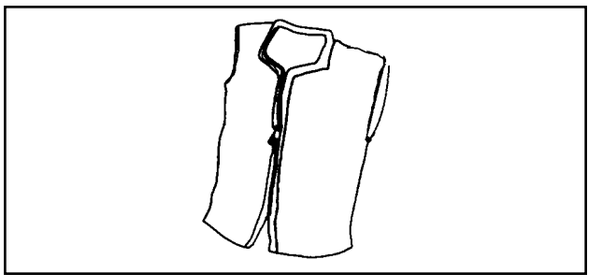

FIGURE 2.3 PFD TYPE III, WEARABLE

PFD Type IV, Throwable, **(Figure 2.4)** can be thrown to a person in the water, grasped and held by the user until rescued. The most common Type IV PFDs are a buoyant cushion or ring buoy. The throwable Type IV PFD should be immediately available for use and always in serviceable condition. This PFD is required in addition to the PFDs previously discussed.

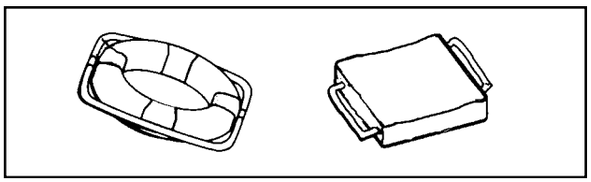

FIGURE 2.4 PFD TYPE IV, THROWABLE

PFD Type V, Wearable, **(Figure 2.5)** must be worn to be effective. When inflated, it provides buoyancy equivalent to Type I, II or III PFDs. When it is deflated, however, it may not support some people.

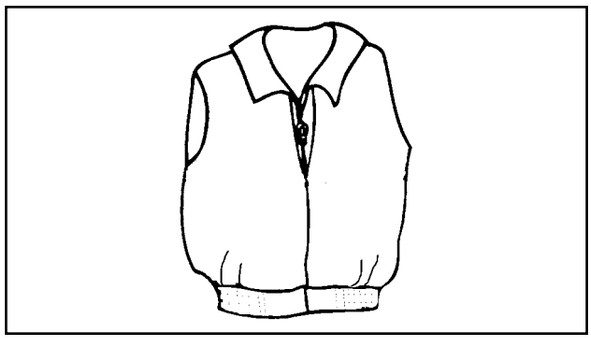

FIGURE 2.5 PFD TYPE V, WEARABLE

FIRE EXTINGUISHERS

All Class 1 (16 to 26 feet) powerboats are required to carry one (1) B-I type hand portable fire extinguisher unless the boat is equipped with a fixed fire extinguishing system in the engine compartment.

All Class 2 (26 to 39.4 feet) powerboats are required to carry two (2) approved B-I Extinguishers or one (1) approved B-II type hand portable fire extinguisher unless equipped with a fixed fire extinguishing system in the engine compartment. When equipped with a fixed fire extinguishing system, only one (1) B-I type hand portable fire extinguisher is required.

All Class 3 (40 to 65 feet) powerboats are required to carry three (3) approved B-I extinguishers or one (1) approved B-II and one (1)B-1 type hand portable fire extinguisher unless equipped with an approved fixed fire extinguishing system in the engine compartment. When equipped with an approved fixed fire extinguishing system, only two (2) B-I type hand portable fire extinguishers or one (1) B-II extinguisher s are required.

All hand portable fire extinguishers should be mounted in a readily accessible location away from the engine compartment. All persons aboard should know the location and proper operation of the fire extinguisher(s).

If your fire extinguisher has a charge indicator gauge, cold or hot weather may have an effect

on the gauge reading . Consult the instr uction manual supplied with the fire extinguisher to determine the accuracy of the gauge.

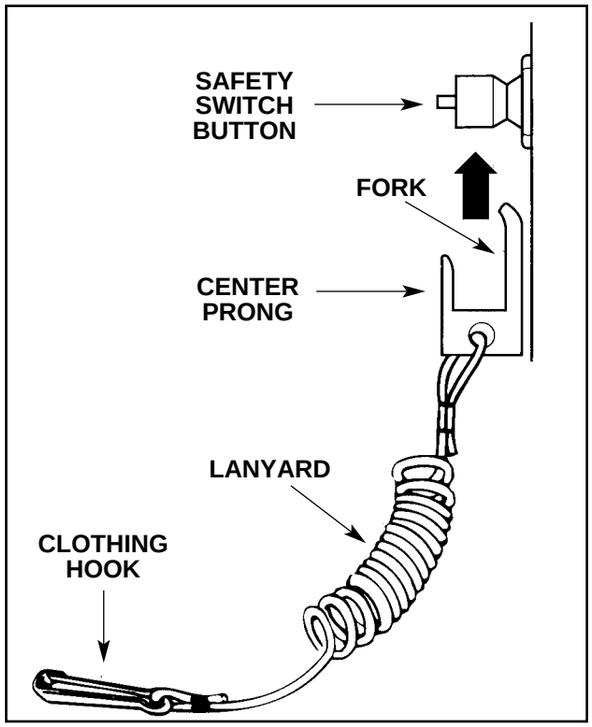

FIGURE 2.6 IGNITION INTERRUPTER WITH LANY ARD

IGNITION INTERRUPTER SWITCH WITH LANYARD

⚠ WARNING

The ignition interrupter switch must never be removed or modified and must always be kept free from obstructions that could interfere with its operation.

The ignition inter rupter switch **(Figure 2.6)** is a safety device which automatically stops the engine when the operator falls from the control station. The ignition safety switch incor porates a shutoff switch, switch clip, lan yard and lanyard clip. The lan yard clip is securely attached to the operator's clothing, arm or leg. Be sure to attach the lan yard to a place where it is free of obstr uctions and to something that will mo ve with the operator if he or she lea ves the helm station.

In order for the engine to r un, the lock plate on the end of the lan yard must be attached to the engine stop switch. T o reset the switch after engine shutdown, reinstall the switch slip abo ve the interrupter switch and flip the inter rupter switch.

VISUAL DISTRESS SIGNAL DEVICES

Coast Guard appro ved visual distress signal devices are required on all recreational boats operating on coastal w aters, including the Great Lakes, territorial seas and those w aters directly connected to the Great Lak es and the ter ritorial seas.

Day Use Only

- Three orange smok e signals, one hand held and two floating **or**
- One orange flag with black square and disk

Night Use Only

- One S-O-S Electric distress light

Day and Night Use

- Three flares of the hand held, meteor or parachute type

No single signaling de vice is appropriate for all purposes. Consideration should be given to possessing various types of equipment. Careful selection and proper stow age of the equipment is very IMPORTANT if young children are frequently aboard.

NOTE: Regulations prohibit displa y of visual distress signals on the w ater under an y circumstances except when assistance is required to pre vent immediate or potential danger to per sons on board a vessel.

SOUND SIGNALLING DEVICES

All Class 1 (16 to 26 feet) pow erboats are required to car ry a hand, mouth or pow er operated horn or whistle. It must produce a blast of two-second duration and audible at a distance of at least one-half (1/2) mile.

All Class 2 (26.1 to 39.4 feet) pow erboats are required to car ry a hand, mouth or pow er operated horn or whistle. It must produce a blast of two-second duration and audible at a distance of at least one (1) mile.

ADDITIONAL RECOMMENDED EQUIPMENT

The following list (not an exhaustive list) indicates some additional recommended equipment which should be considered for safe, enjoyable boating.

Tools

- Spark plug wrench
- Hammer
- Screwdrivers
- Jackknife
- Pliers
- Electricians tape
- Adjustable wrench
- Lubricating oil
- Prop wrench
- Duct tape

Spare Parts

- Extra Bulbs
- Spare Propeller
- Extra fuses
- Extra drain plug
- Spark plugs
- Spare wire
- Extra prop nut/washer

Basic Gear

- Flashlight
- Spare batteries
- Tow line
- Oar or paddle
- Mooring lines
- Compass
- Dock Fenders
- Distress signals
- First aid kit
- Boat hook
- Foul weather gear
- VHF Radio
- EPBIRB
- Suntan lotion
- Extra warm clothing
- Charts
- Second Anchor & line
- Ring life buoy with length of line attached
- Dewatering device (pump or bailer)
- Emergency supply of drinking water and food

SAFE BOATING COURSES

Your local U.S. Coast Guard Auxiliary and the U.S. Power Squadrons offer comprehensive safe boating classes several times a year. You may contact the Boat/U.S. Foundation at 1-800-336-BOAT (2628) or, in Virginia, 1-800-245-BOAT (2628) for a course schedule in your area. Also contact your local U.S. Coast Guard Auxiliary or Power Squadron Flotilla for the time and place of their next scheduled class.

DRUGS AND ALCOHOL

⚠ WARNING

Alcohol consumption and boating do not mix. Operating any boat while intoxicated or under the influence of drugs is both dangerous and illegal. Impaired vision or judgment on the water can quickly lead to disaster. Driving any boat, requires sober, attentive care. Federal laws prohibit operating a boat under the influence of alcohol or drugs. These laws are vigorously enforced.

The operator is responsible for the safety of all passengers. Refrain from the use of drugs and/or alcohol while operating your boat. Operation of motorized vessels while under the influence is a Federal offense carrying a significant penalty. The use of drugs and/or alcohol will decrease reaction time, impede judgment, impair vision and inhibit your ability to safely operate a boat.

SAFE OPERATION

Avoid product misuse including but not limited to the following actions:

- Riding seat back, gunwale, engine cover, bow or in other unsafe positions.
- Failure to use handholds or and other safety hardware.
- Overloading or improper handling.
- Excessive speed for the operating conditions.
- Speed in excess of the local legal limit.

- Use in weather or sea conditions beyond the skill or experience of the operator or the comfortable capability of the boat or passengers.

- Continued operation with operator's visibility blocked or impaired.

- Operating under the influence of drugs or alcohol.

POWER CAPACITY

Do not exceed the maximum engine power rating stated on the certification plate attached to your boat.

PASSENGER SAFETY

Be sure at least one of your passengers is familiar with the operation and safety aspects of the boat in case of an emergency. Show all passengers the location of emergency equipment and explain how to use it. Don't allow passengers to drag their feet or hands in the water or sit on the bow, deck, or gunwale while the boat is moving.

OPERATION BY MINORS

Minors should always be supervised by an adult whenever operating a boat. Many states have laws regarding the minimum age and licensing requirements of minors. Be sure to contact the state boating authorities for information.

CARBON MONOXIDE AND BOATING

Carbon monoxide (CO) is a colorless, odorless gas by-product of the burning of carbon based fuels like gasoline. In high concentrations, CO can be fatal within minutes. The effects of CO in lower concentrations are cumulative and can be just as lethal over long periods of time. Symptoms of carbon monoxide poisoning include: itchy and watering eyes, flushed appearance, throbbing temples, inability to think coherently, ringing in the ears, tightness across the chest, headaches, drowsiness, nausea, dizziness, fatigue, vomiting, collapse and convulsions. **CARBON MONOXIDE POISONING IS OFTENTIMES CONFUSED WITH SEASICKNESS.**

Outboard motors and stern drive engines exhaust carbon monoxide and other gases typically through the hub or the propeller. To avoid exposure to carbon monoxide, do not stand or swim near the motor when the engine is idling.

Outboard and stern drive powered open boats present a lower risk of exposure to dangerous levels of carbon monoxide from their own motors because natural ventilation dissipates the majority of the engine exhaust. However, engine or generator exhaust from other boats docked or anchored nearby can emit poisonous carbon monoxide gas and endanger people in the vicinity. Be alert for exhaust from other boats alongside your boat, and monitor people around you for symptoms of carbon monoxide poisoning. If you suspect carbon monoxide poisoning, evacuate the area and move the victim to fresh air. Get medical help immediately.

Carbon monoxide poisoning requires the operator's special and immediate attention! To prevent excess exposure and reduce the possibility of carbon monoxide accumulation in the cabin or cockpit, open hatches, doors, windows and side windshield vents to ensure adequate ventilation. When equipped, close the cabin door while underway to prevent backdrafting of exhaust into the cabin.

The following illustrations and text describe some possible situations where carbon monoxide may accumulate within your boat while docked, anchored or underway. Become familiar with these examples and their precautions to prevent DANGEROUS accidents. Wellcraft installs a CO monitor on all models with enclosed accommodation spaces. Never disable a carbon monoxide detector.

⚠ WARNING

Carbon monoxide can be harmful or fatal if inhaled. Keep exhaust outlets clear of blockage. Provide adequate ventilation. Open hatches, doors, windows and vents to ensure adequate ventilation. Close engine compartment doors and hatches when engine or generator is running.

⚠ WARNING

Generator or hull exhaust from other vessels while either docked or anchored can emit poisonous carbon monoxide gas and cause excessive accumulation within the cabin and cockpit areas of your boat. See Figure 2.7. Be alert for generator exhaust from other vessels alongside your boat.

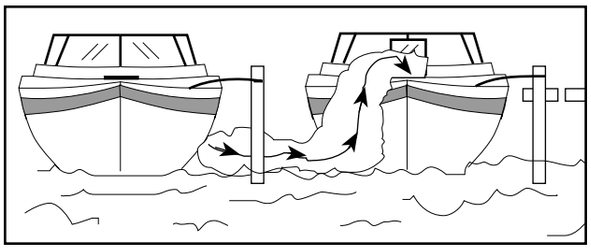

FIGURE 2.7 VESSEL ALONGSIDE

⚠ WARNING

BACKDRAFTING Station Wagon Effect (Inefficient Trim Angle): Under certain conditions, moving air currents can direct carbon monoxide fumes into the boat (Figure 2.8). These fumes can accumulate to dangerous levels without proper airflow. Provide adequate ventilation, redistribute the load or bring boat out of high bow angle.

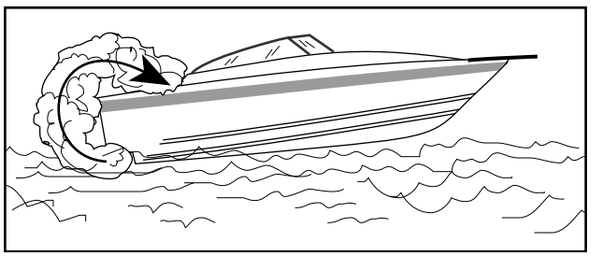

FIGURE 2.8 HIGH BO W ANGLE

While underway, CO concentrations can increase by backdrafting or "the station w agon effect." Backdrafting is caused b y factors such as relative wind direction, speed or the bow being too high. To prevent this, open hatches and operate blowers whenever possible to pro vide positive airflow through the hull.

⚠ WARNING

Hull exhaust from your boat while underway can cause excessive accumulation of poisonous carbon monoxide gas within the cabin and cockpit areas of your boat when using protective weather coverings (Figure 2.9). Provide adequate ventilation when the canvas top, side curtains and/or back curtains are in their closed protective positions.

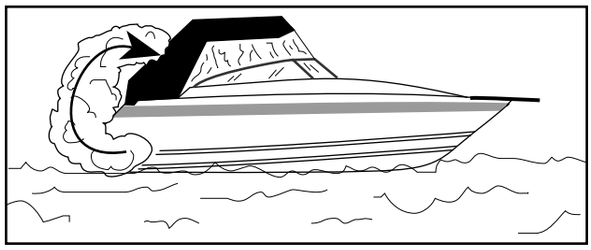

FIGURE 2.9 WHILE UNDER WAY

⚠ WARNING

Hull exhaust outlets near a pier, dock, seawall or outlets blocked by any other means can cause excessive accumulation of poisonous carbon monoxide gas within the cabin areas. Make sure hull exhaust outlets are not blocked. (Figure 2.10)

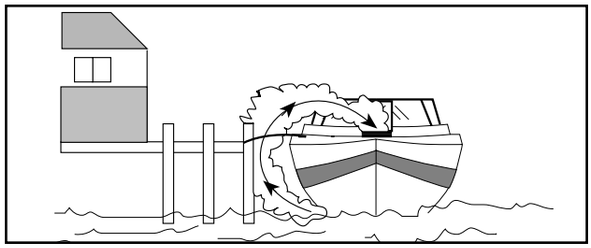

FIGURE 2.10 RUNNING ENGINE IN CONFINED AREAS

Boat houses, sea walls and other boats in close proximity or confined areas can contribute to increased CO le vels. **Operators must be aware that operation, mooring and anchoring in an area with other boats puts them in jeopardy of CO accumulation from other sources. Likewise, a boat operator must be aware of the effect of his actions on other boats.** Operation of the engines while moored may cause CO accumulation on your boat and those around you.

⚠ WARNING

Engine exhaust from your boat when operating at slow speed or stopped in the water can cause excessive accumulation of carbon monoxide within the cabin and cockpit areas. Tail wind can increase accumulation). Provide adequate ventilation or slightly increase speed if possible.

Installing rear canvas while underway increases the chance of CO accumulation in your boat. Be sure to provide adequate ventilation **(Figure 2.11)**. If your windshield has vents, open them before getting underway to increase positive air flow and decrease the chances of CO accumulation. If your boat is a bowrider model, remove bow area canvas and walk through canvas if underway with bimini top installed to increase airflow through the boat and decrease chances of CO accumulation.

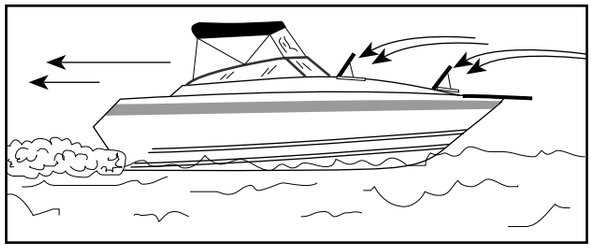

FIGURE 2.11 DESIRED VENTILATION THROUGH THE BOAT

Even with the best boat design and construction, CO may still accumulate in accommodation spaces under certain conditions. Continually observe passengers for symptoms of CO poisoning.

WATER SPORTS

⚠ WARNING

Your boat is not designed for and should not be used for pulling parasails, kites, gliders or any device which can become airborne.

Water skiing, kneeboarding or riding a towed, inflatable apparatus are some of the more popular water sports. Taking part in any water sport requires increased safety awareness by the participant and the boat operator. If you have never pulled someone behind your boat before, it is a good idea to spend some hours as an observer, working with and learning from an experienced driver. It is also important to be aware of the skill and experience of the person being pulled.

Everyone participating in a water sport should observe these guidelines:

1. Allow only capable swimmers to take part in any water sport.

2. Always wear a personal flotation device (PFD) approved by the U.S. Coast Guard. Wearing a properly designed PFD will help a stunned or unconscious person stay afloat.

3. Always participate in water sports in safe areas. Stay away from other boats, beaches, swimmers and heavily traveled waterways.

4. Be considerate to others you share the water with.

6. Give immediate attention to a person who has fallen. He or she is vulnerable in the water alone and may not be seen by other boaters.

7. Approach a person in the water from the lee side (opposite the direction of the wind). Stop the motor before coming close to the person.

8. Turn off engine and anchor your boat before swimming.

9. Swim only in areas designated as safe for swimming. These are usually marked with a swim area buoy **(Figure 2.12)**. Do not swim alone or at night.

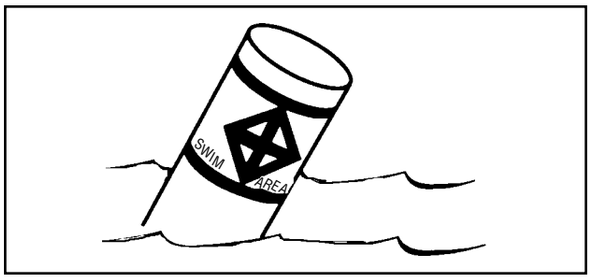

FIGURE 2.12 SWIM AREA BUOY

10. Do not allow anyone near the propeller(s), even when the engine is off. Propeller blades can be sharp and can continue to turn even after the engine if off. Stay at least 150 feet away from areas marked by a diver down float **(Figure 2.13)**.

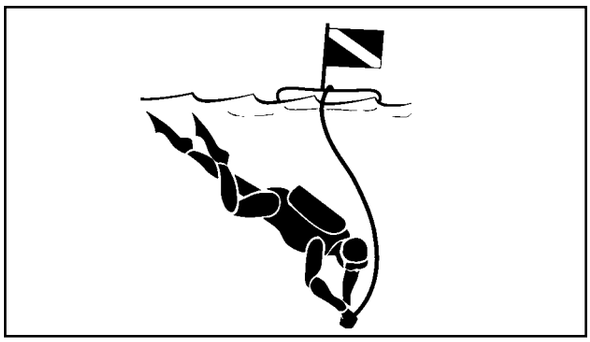

FIGURE 2.13 DIVER DOWN FLOAT

WATER SKIING

The popular sport of water skiing has brought a special set of safety precautions to observe in boating. The following guides, in addition to the guides listed above will do much to reduce the hazards while water skiing.

1. Water ski only in safe areas, away from other boats and swimmers, out of channels, and in water free of underwater obstructions.

2. Allow no one who cannot swim to water ski.

⚠ WARNING

Skiers must wear a USCG approved personal flotation device. A Type III water-ski vest is an approved and practical PFD.

3. Have a second person aboard to observe the skier and inform the driver about the skier's hand signals **(Figure 2.14)**. The driver must give full attention to operating the boat and the waters ahead.

4. Give immediate attention to a fallen skier. Be careful not to swamp the boat while taking a skier on board.

⚠ WARNING

Switch engine off before taking skiers aboard from in the water. Do not leave engine running in neutral; if the shift is accidentally engaged the skier could be seriously injured by the propeller.

5. Do not water ski between sunset and sunrise. It is illegal in most states.

6. Always attach the waterski rope to the ski pylon. Do not use the ski pylon to tow your boat or other boats.

7. For more information about water skiing, please contact the American Water Ski Association, 799 Overlook Drive, Winter Haven, FL 33884 (1-800-533-2972).

RULES OF THE ROAD

Your boat is subject to U.S. Coast Guard-enforced marine traffic laws known as "Rules of the Road." There are two sets of rules: the United States Inland Navigational Rules and the International Rules. The United States Inland Rules are applicable to all vessels inside the demarcation lines separating inland and international waters. The "Rules of the Road" can be

1. **Thumb Up:** Speed up the boat.
2. **Thumb Down:** Slow down the boat.
3. **Cut Motor/Stop:** Immediately stop boat. Slashing motion over neck (also used by driver or observer).
4. **Turn:** Turn the boat (also used by driver). Circle motion—arms overhead. Then point in desired direction.
5. **Return to Dock:** Pat on the head.
6. **OK:** Speed and boat path OK. Or, signals understood.
7. **I'm OK:** Skier OK after falling.

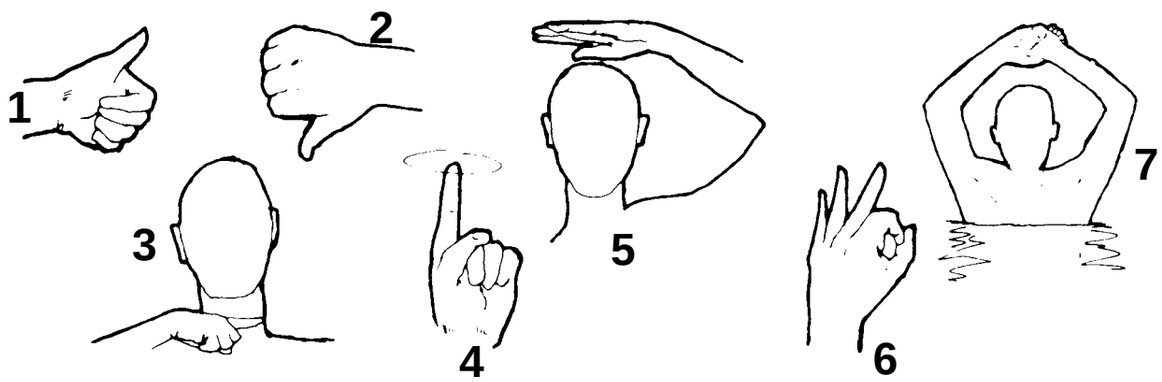

FIGURE 2.14 SKIER'S HAND SIGNALS

obtained from your local U.S. Coast Guard Unit or the United States Coast Guard Headquarters by calling (202) 512-1800 or faxing your request to (202) 512-2250, and asking for the publication titled "Navigational Rules, International-Inland."

"Aids to Navigation" (U.S. Coast Guard pamphlet #123) explains the significance of various lights and buoys. This and other pamphlets, including the "Boating Safety Training Manual" and "Federal Requirements For Recreational Boats," are also available from the U.S. Coast Guard Headquarters.

Because of proposed alterations in buoys and markers, contact the U.S. Coast Guard to stay informed of changes.

The spoken word "MAYDAY" is the international signal of distress. MAYDAY should NEVER be used unless there is grave or imminent danger, and you are in need of immediate assistance.

AIDS TO NAVIGATION

Aids to navigation (ATONS) help you to travel safely on the water. They help you get from one place to another, and are most helpful if you have a nautical chart. NEVER tie your vessel to an ATON. It is illegal, and blocks it from view of other boaters, which can cause serious problems.

There are two ATON systems. The first system, used on federal waters, is known as the International Association of Lighthouse Authorities System B (IALA-B). The Coast Guard maintains this system. The second system is the Uniform State Waterway Marking System (USWMS). This system is maintained by state authorities.

IALA System B

In the United States, IALA-B uses four types of ATONS. These are lateral marks, safe water marks, special marks, and isolated danger marks. The Navigational Aids Chart at the end of this section reflects these aids.

Red, Right, Returning

Red, Right, Returning is a basic rule to assist you in using lateral markers. When you are returning from seaward, keep red markers on your starboard side when you pass them. These markers may either be buoys or fixed ATONS. Since lateral markers are either red or green, keep the green markers to your port (or left) side.

Returning from seaward is very clear if you have been on the ocean. You are returning to port. By agreement, going up a navigational river is returning from sea. The outlet ends of the Great Lakes are also the seaward ends. Also travelling from a large body of water to a smaller one is considered returning from seaward.

You are returning from seaward if you travel in a clockwise direction around the United States. So, going south on the Atlantic coast, north along the west coast of Florida, west along the Gulf coast, and north along the Pacific coast is returning from seaward.

Lateral Marks

Look at the left and right columns of the upper part of The Navigational Aids Chart. (The chart is at the end of this section.) These lateral marks indicate the sides of navigable channels. They consist of lighted buoys, CAN or NUN BUOYS, and DAYMARKS. Each has a number and is either red or green. The numbers on green markers are odd. Red markers have even numbers.

Buoys

Buoys are red or green floating ATONS. If lighted, they have either red or green lights. Unlighted green buoys, called cans, look like cylinders. Unlighted red nun buoys have cone shaped tops with their points cut off. Don't pass too close to a buoy. You may foul your propeller in its chain.

⚠ CAUTION

Buoys are anchored floating objects and may not always be exactly in the same position.

Daymarks

Daymarks are red or green boards with numbers. They are on posts or groups of pilings tied together and called dolphins. Daymarks and their supports are daybeacons. Daybeacons may or may not have lights. If a red or green daybeacon has a light, it is the same color as the marker red or green. Red daymarks are triangular and have even numbers. Green daymarks are square and have odd numbers.

Safe Water Marks

You can find Safe Water Markers at the center of the Navigational Aids Chart. These signals have vertical red and white stripes and mark the center of navigable channels and fairways. Safe water markers included both lighted and unlighted buoys and daymarks. If it is lighted, the light will be white, and will flash the letter A in Morse code.

Preferred Channel Markers

Preferred Channel Markers have horizontal red and green bands. If lighted, the color of the light is the same as the top of the band. They show the preferred channel for you to use at a junction point. Be sure to notice the color of the top band, and treat it as any other marker you would of that color. If the band is red and you are returning from seaward, keep the marker to your right.

Lights on Markers

Most lights on markers flash on and off. Others such as lights on aids with no lateral significance are fixed. They stay on all night. ATON lights flash in regular patterns. For example, they may flash every three seconds, or in groups such as two flashes and a pause. There are a number of flashing patterns, which help you identify the light at night. To identify a light, note its color and pattern or timing of flashes, and compare it to your chart to find its location.

THE UNIFORM STATE WATERWAY MARKING SYSTEM

There are four kinds of markers in the system Regulatory, Informational, Cardinal and Lateral.

USWMS Regulatory Markers

The markers in this system are either signs or buoys. Signs are square with orange borders. Regulatory buoys are white and shaped like cylinders. They have horizontal orange bands near their tops and just above the surface of the water.

An orange circle on a marker means a controlled area. A message such as No Wake, Idle Speed, No skiing, or 5 MPH may appear on the marker.

An orange diamond means danger. If the diamond has an orange cross inside it, don't enter the area. The reason you should stay out, such as "Swim Area" may be printed in black on the marker.

USWMS Informational Markers

USWMS informational markers are white signs with orange borders. They give information such as direction, distance, and location.

USWMS Lateral Markers

Lateral buoys in the USWMS system are either red or black. They have numbers, and black buoys may have green reflectors or lights. They are the equivalent of green buoys in the IALA-B system. Red buoys may have red reflectors or lights, as well. Red and black buoys are usually found in pairs pass between them.

A Special Sign

In Florida, you may see a special sign: "Caution, Manatee Area". When you see this sign, slow down to idle speed. Manatees, an endangered species, are passive, large, slow-moving mammals. Many manatees are seriously injured or killed each year by boat propellers.

GENERAL RULES OF SEAMANSHIP

1. Cross waves at right angles.

2. When caught in heavy water or squalls, head either directly into the waves or at a slight angle. Reduce speed, but maintain enough power to maneuver your boat safely.

3. Keep your speed under control. Respect the rights of boaters engaged in fishing, swimming, water skiing or diving. Give them "wide berth".

4. When meeting a boat head on, keep to the right whenever possible.

5. When two boats cross, the boat to the right or starboard has the right of way.

6. When overtaking or passing, the boat being passed has the right of way. The boat being passed is required to maintain the same course and speed.

RIGHT-OF-WAY

In general, boats with less maneuverability have right-of-way over more agile power boats. In your power boat, you must stay out of the way of the following vessels:

- A vessel not under command or aground. Due to their circumstances, these vessels have no maneuverability.
- A vessel restricted in its maneuverability. These vessels are performing work which limits their maneuverability such as: surveying, dredging, laying pipe or cable, or servicing navigational markers among others.
- A vessel engaged in fishing. These include boats fishing with lines, trawls or nets; but not trolling lines.
- Sailboats. Sailboats have the right-of-way over power boats; however, if a sailboat is using a propeller to move forward, it is considered a power boat even if its sails are up.

MEETING A VESSEL HEAD-ON

In a head-on situation, neither boat has the right-of way. Both boats should decrease speed and pass port to port **(Figure 2.15)**. However, if both boats are on the left side of a channel, each vessel should sound two short horn blasts and pass starboard to starboard.

CROSSING SITUATIONS

In a crossing situation, the boat on the right from the 12-4 o'clock position has the right-of-way. It must hold course and speed. The boat without right-of-way must keep clear and pass to the stern as shown on **Figure 2.16**.

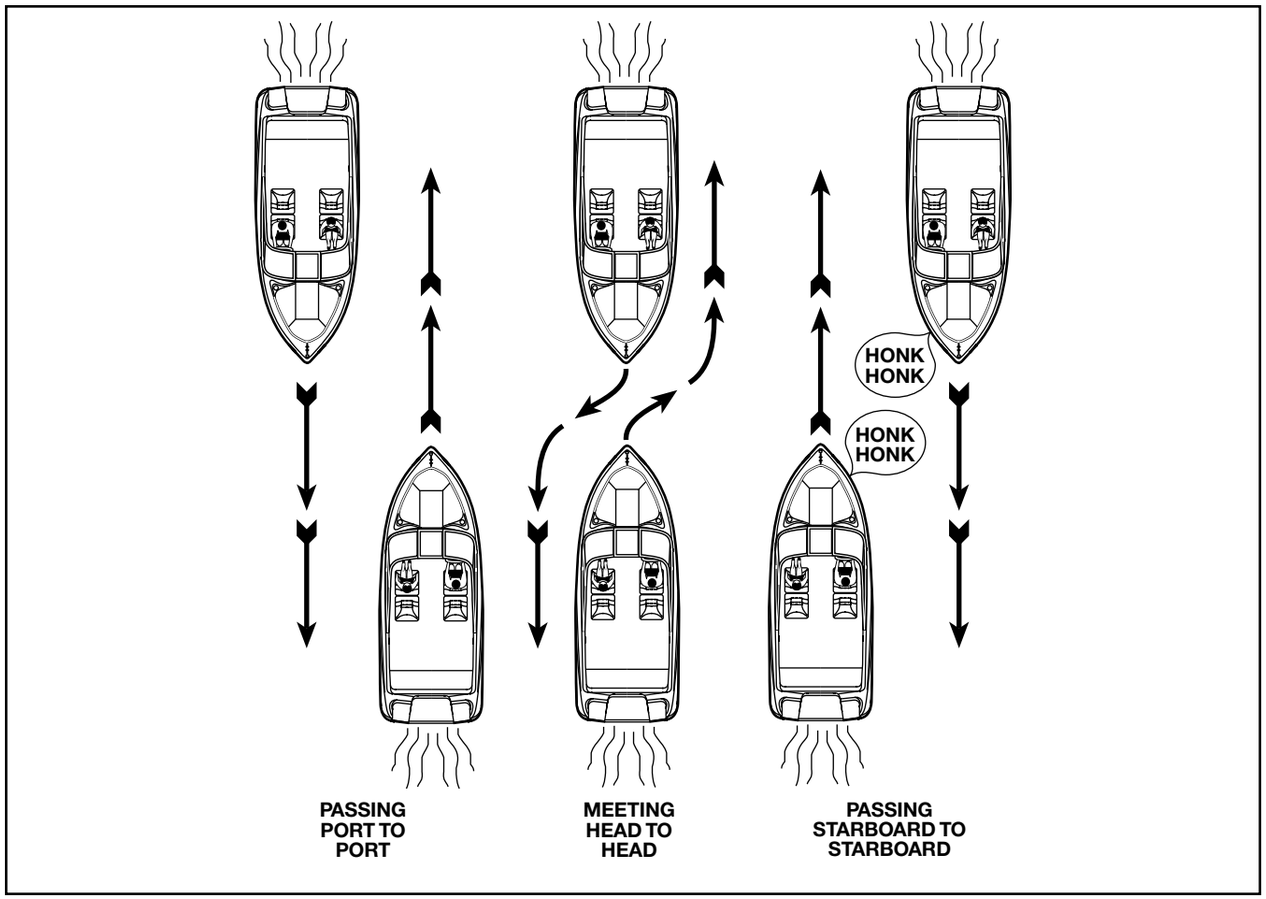

FIGURE 2.15 MEETING HEAD-ON

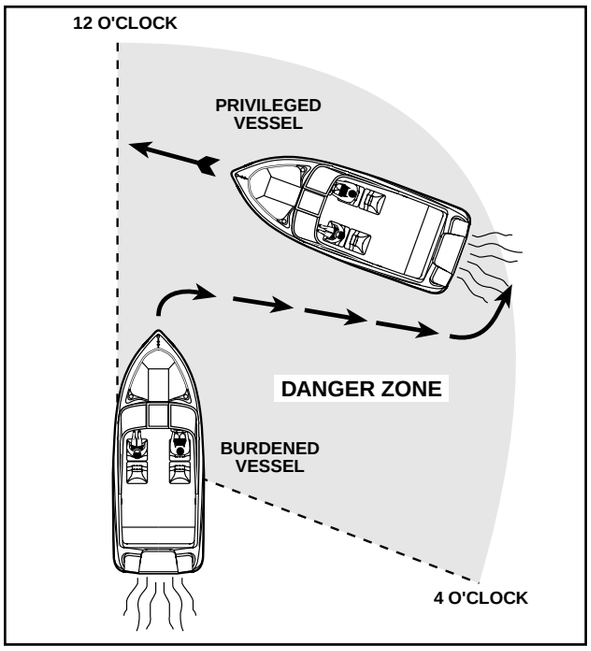

FIGURE 2.16 CROSSING

OVERTAKING

The boat overtaking the one ahead must yield the right-of-way to the boat being passed. The overtaking boat must make any necessary adjustments to keep out of its path. See **Figure 2.17**. The boat being passed should hold its course and speed.

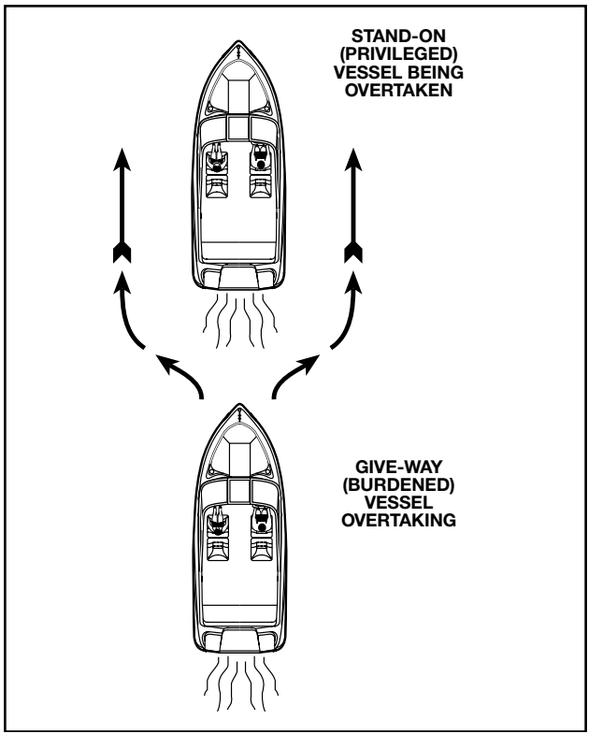

FIGURE 2.17 OVERTAKING

WHISTLE SIGNALS

Out on the water, whistle signals are commonly used. Although using a whistle signal is not necessary every time a boat is nearby, operators must signal their intentions when necessary to avoid potentially confusing or hazardous situations. It is customary for the privileged boat to signal first and the give way boat to return the same signal to acknowledge she understands and will comply. Use the danger signal (five or more short and rapid blasts) if intent is not clear. A short blast is 1 or 2 seconds long. A long blast is 4 to 6 seconds long.

USE WHISTLE BLASTS EARLY ENOUGH TO BE NOTICED AND UNDERSTOOD BY OTHER BOATERS. The Navigational Aids Chart at the end of this section lists the meanings of the various whistle signals.

THE GENERAL PRUDENTIAL RULE

The general prudential rule regarding right-of-way is that if a collision appears unavoidable, neither boat has right-of-way. As prescribed in the Rules of the Road, both boats must act to avoid collision.

NIGHT RUNNING

Boats operating between sunset and sunrise (hours vary by state), or in conditions of reduced visibility, must use navigational lights. Nighttime operation, especially during bad weather or fog, can be dangerous. All Rules of Road apply at night, but it is best to slow down and stay clear of all boats regardless of who has right-of-way.

To see more easily at night, avoid bright lights when possible. Also, it is helpful to have a passenger keep watch for other boats, water hazards and navigational aids.

To determine the size, speed and direction of other vessels at night, you should use the running lights. A green light indicates the starboard side, and a red light indicates the port side. Generally, if you see a green light, you have the right-of-way; if you see a red light, give way to the other vessel. See **Figure 2.18**.

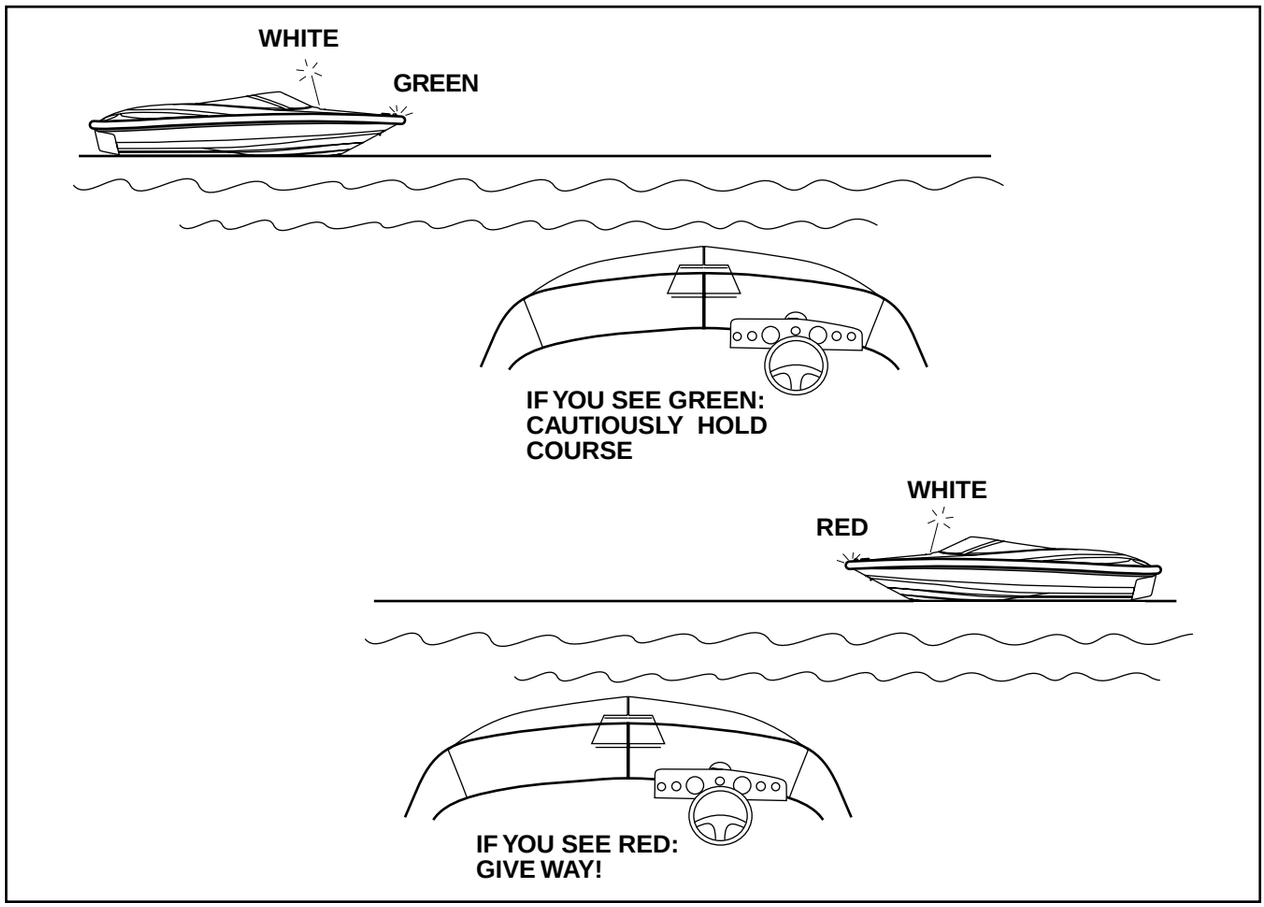

FIGURE 2.18 NIGHT RUNNING

NAVIGATIONAL AIDS CHART

The illustrated Navigational Aids Chart located on the next page contains information concerning whistle signals, storm warnings, bridge signals and buoy descriptions and information.

Navigational Aids Chart

REMEMBER THESE RULES

1. **OVERTAKING - PASSING: Boat being passed has the right-of-way. KEEP CLEAR.**
2. **MEETING HEAD ON: Keep to the right.**
3. **CROSSING: Boat on right has the right-of-way. Slow down and permit boat to pass.**

← PORT STARBOARD →

Yield right-of-way to boats in your DANGER ZONE!

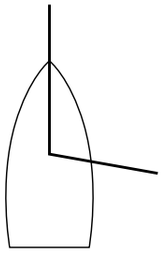

DANGER ZONE (Dead ahead to 2 points abaft your starboard beam)

STORM WARNINGS

RED FLAG Small craft (winds to 33 knots)

2 RED FLAGS Gale (winds up to 47 knots)

SQUARE RED FLAG BLACK BOX (Storm)

2 SQUARE RED FLAGS BLACK BOX (Hurricane)

WHISTLE SIGNALS

ONE LONG BLAST: Warning signal (Coming out of slip)

ONE SHORT BLAST: Pass on my port side

TWO SHORT BLASTS: Pass on my starboard side

THREE SHORT BLASTS: Engine(s) in reverse

FOUR OR MORE BLASTS: Danger signal

BRIDGE SIGNALS

SOUND

VESSEL: Open

BRIDGE: OK

No

VESSEL: Replies:

RADIO: VHF CH. 13

VISUAL

	DAY (Flag)	NIGHT (Lights)
VESSEL: Open		
BRIDGE: OK	Same	Same

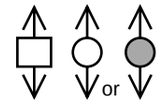

No

LATERAL AIDS AS SEEN ENTERING FROM SEAWARD

PORT SIDE
ODD NUMBERED AIDS

GREEN LIGHT ONLY

FLASHING

OCCULTING

QUICK FLASHING

ISOPHASE

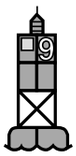

LIGHTED BUOY — *G "9" Fl G 4sec*

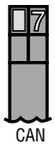

CAN — *G C "7"*

SG

DAYMARK — G "1"

SAFE WATER MID-CHANNELS OR FAIRWAYS
NO NUMBERS — MAY BE LETTERED

WHITE LIGHT ONLY MORSE CODE

Mo (A)

SPHERICAL — *RW SP "G"*

MR — RW "A"

LIGHTED AND OR SOUND — *RW "N" Mo (A)*

PREFERRED CHANNEL
NO NUMBERS — MAY BE LETTERED

COMPOSITE GROUP FLASHING (2 + 1)

GREEN LIGHT ONLY

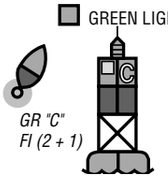

GR "C" Fl (2 + 1)

RED LIGHT ONLY

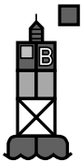

RG "B" Fl (2 + 1)

LIGHTED

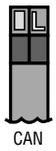

CAN — PREFERRED CHANNEL TO STARBOARD TOPMOST BAND GREEN — *GR C "L"*

NUN — PREFERRED CHANNEL TO PORT TOPMOST BAND RED — *RG N "W"*

JG

GR "A"

JR

RG "B"

STARBOARD SIDE
EVEN NUMBERED AIDS

RED LIGHT ONLY

FLASHING

OCCULTING

QUICK FLASHING

ISOPHASE

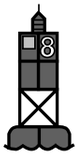

LIGHTED BUOY — *R "8" Fl R 4sec*

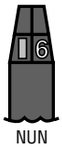

NUN — *R N "6"*

TR

DAYMARK — R "2"

Specifications and Layout – 3

This owner's manual covers a number of Wellcraft models. The specifications for these models are detailed in this section. You will need to become aware of your boat's dimensions, weight, bridge clearance and draft and learn the importance of these measurements.

NOTE: In all specifications, bridge clearance dimension is figured with average load. Antenna, canvas, etc. are not included.

Figures 3.1 thru 3.17 in this section show the locations of equipment on various Wellcraft models. Depending on model, this equipment is standard, optional, or not available. Check with your dealer if you have any questions about how your boat is equipped. In addition, the locations of fills, vents and other equipment may vary.

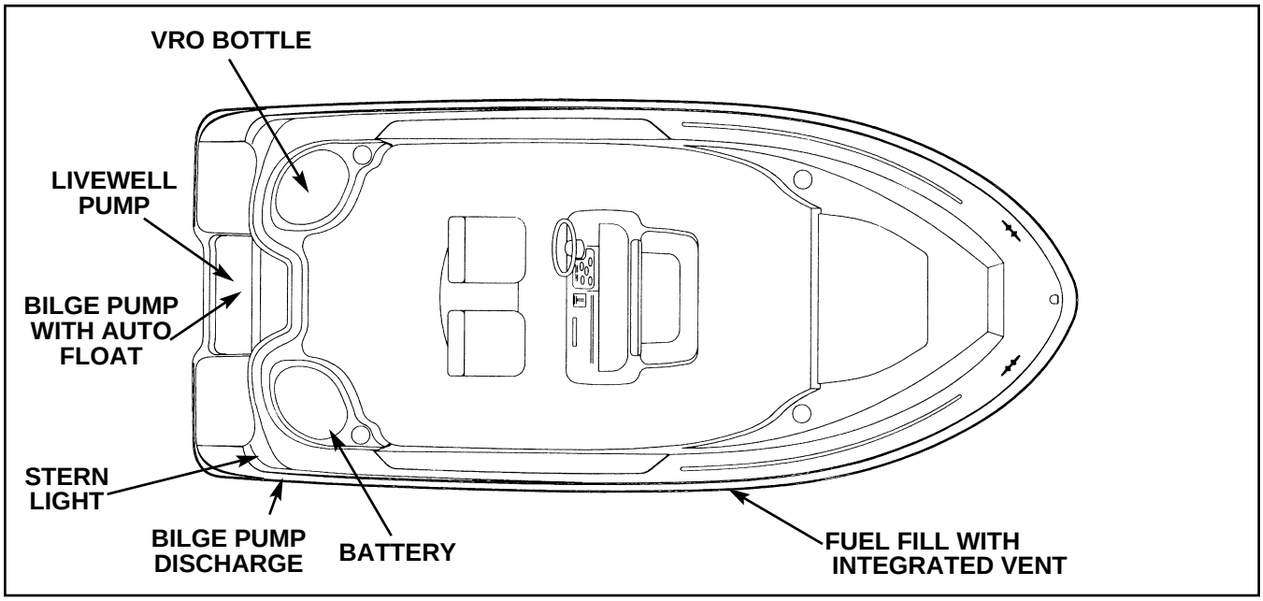

FIGURE 3.1 180 FISHERMAN

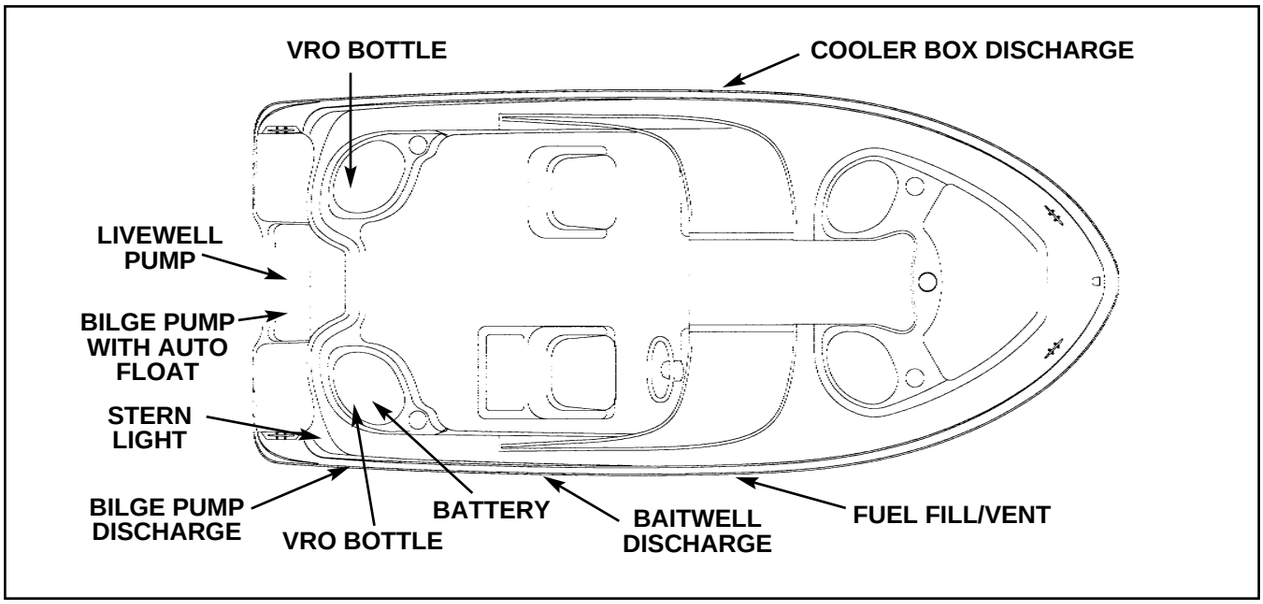

FIGURE 3.2 180 SPORTSMAN O/B

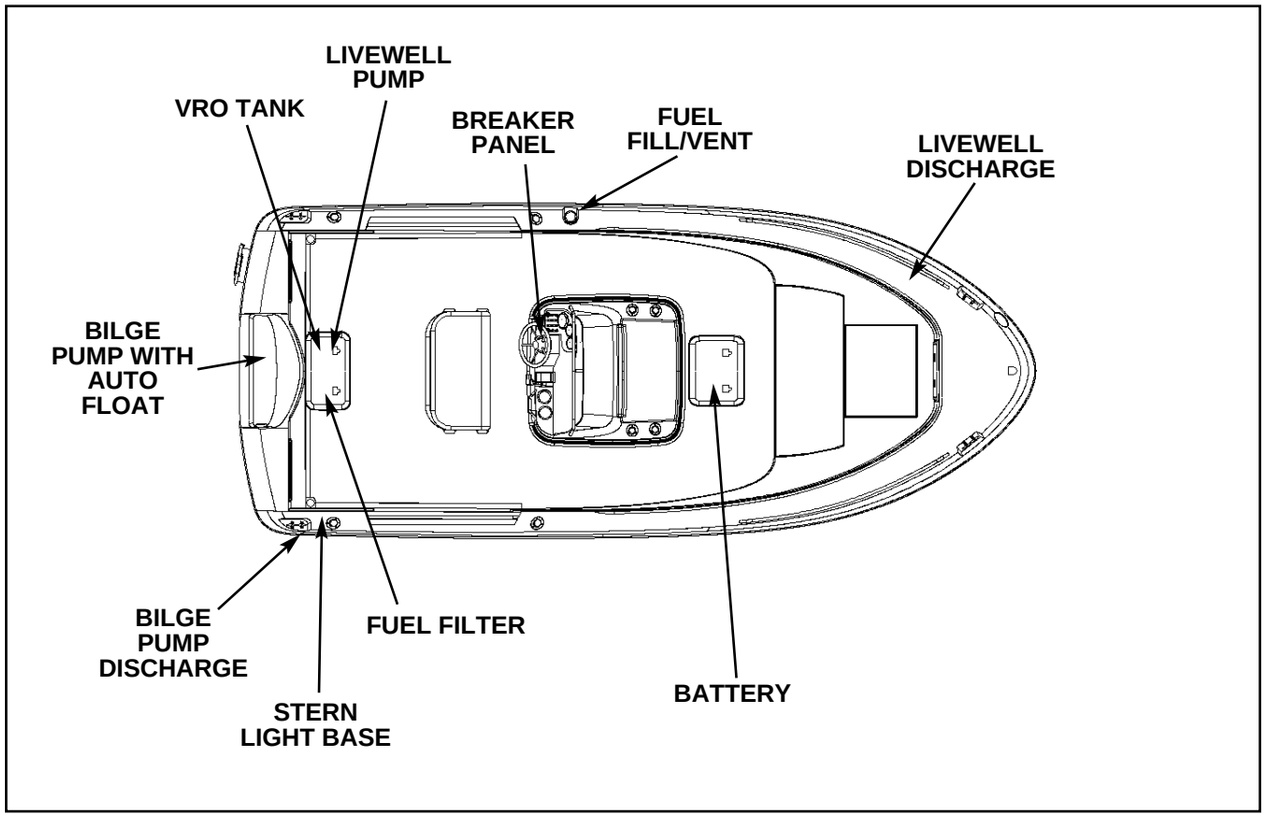

FIGURE 3.3 200 FISHERMAN

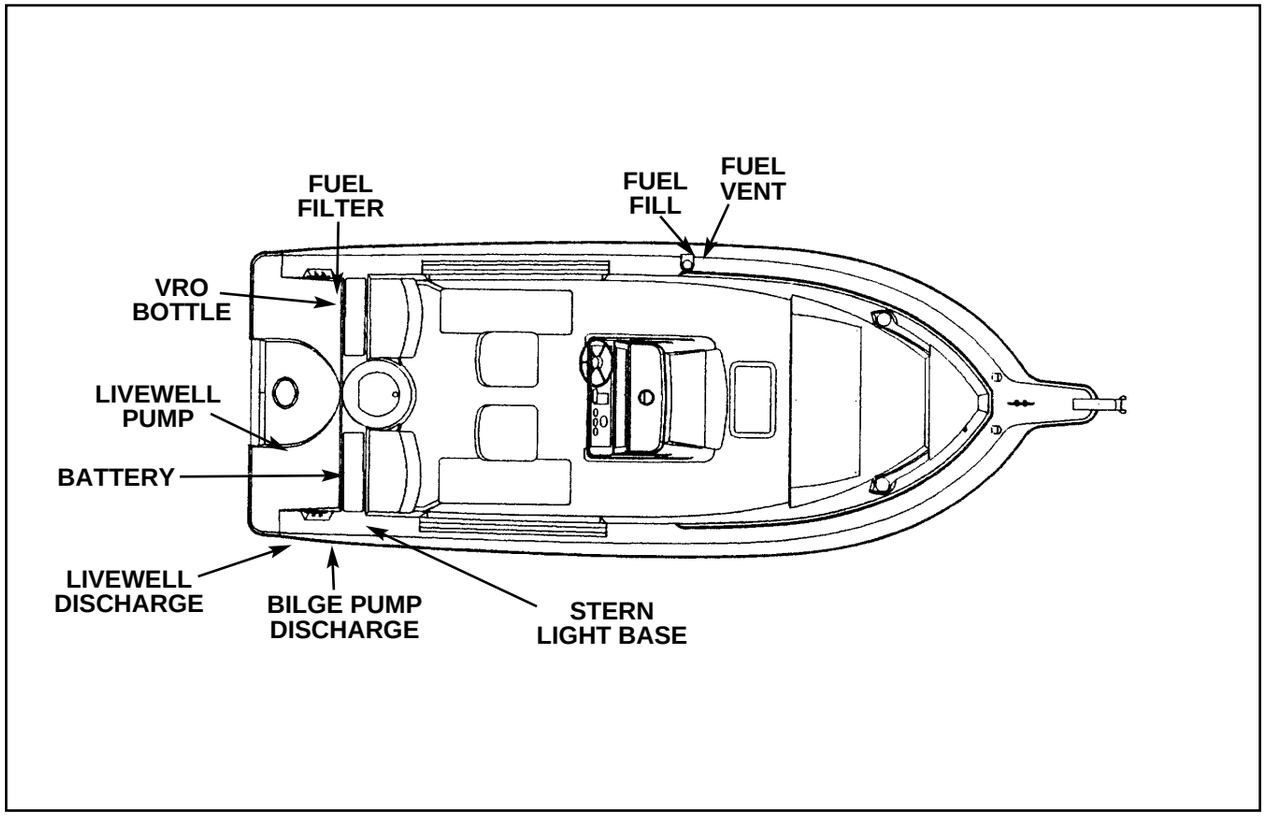

FIGURE 3.4 210 FISHERMAN

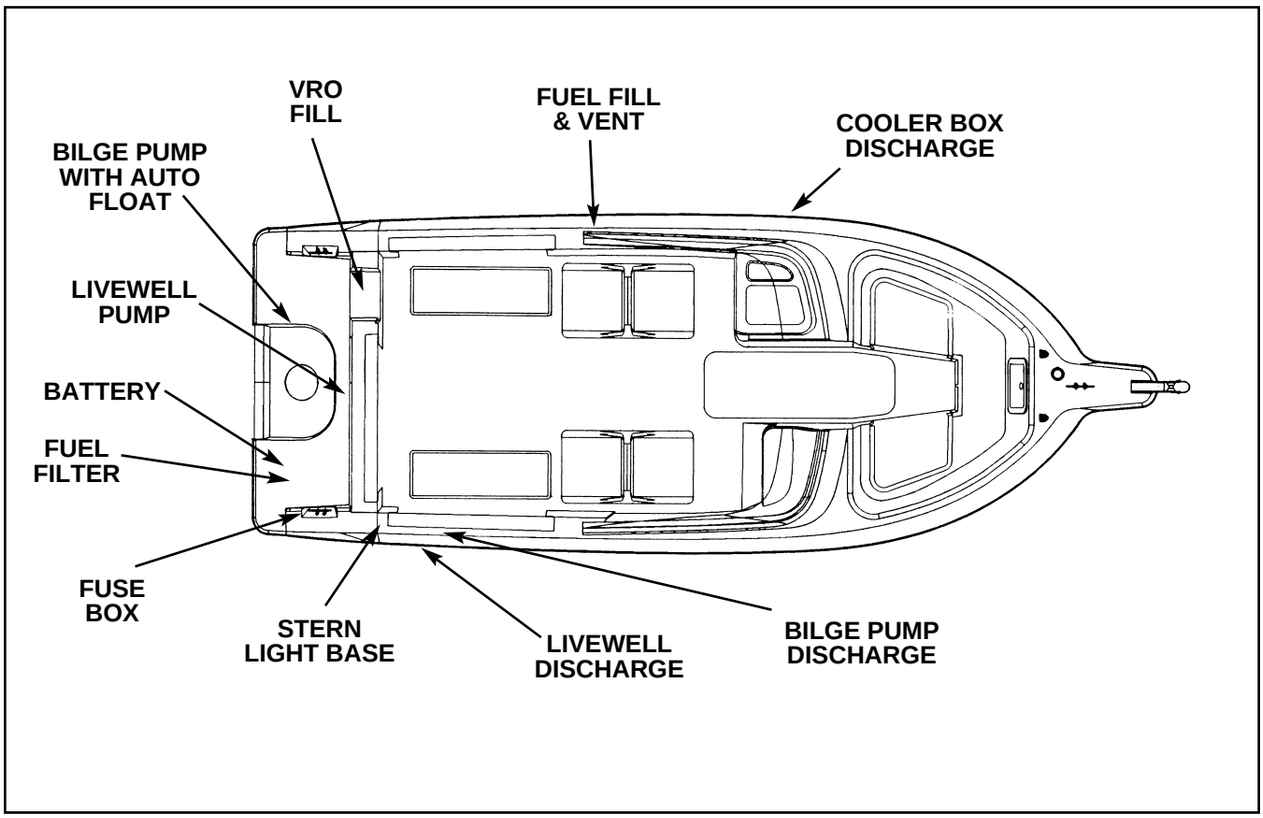

FIGURE 3.5 210 SPORTSMAN

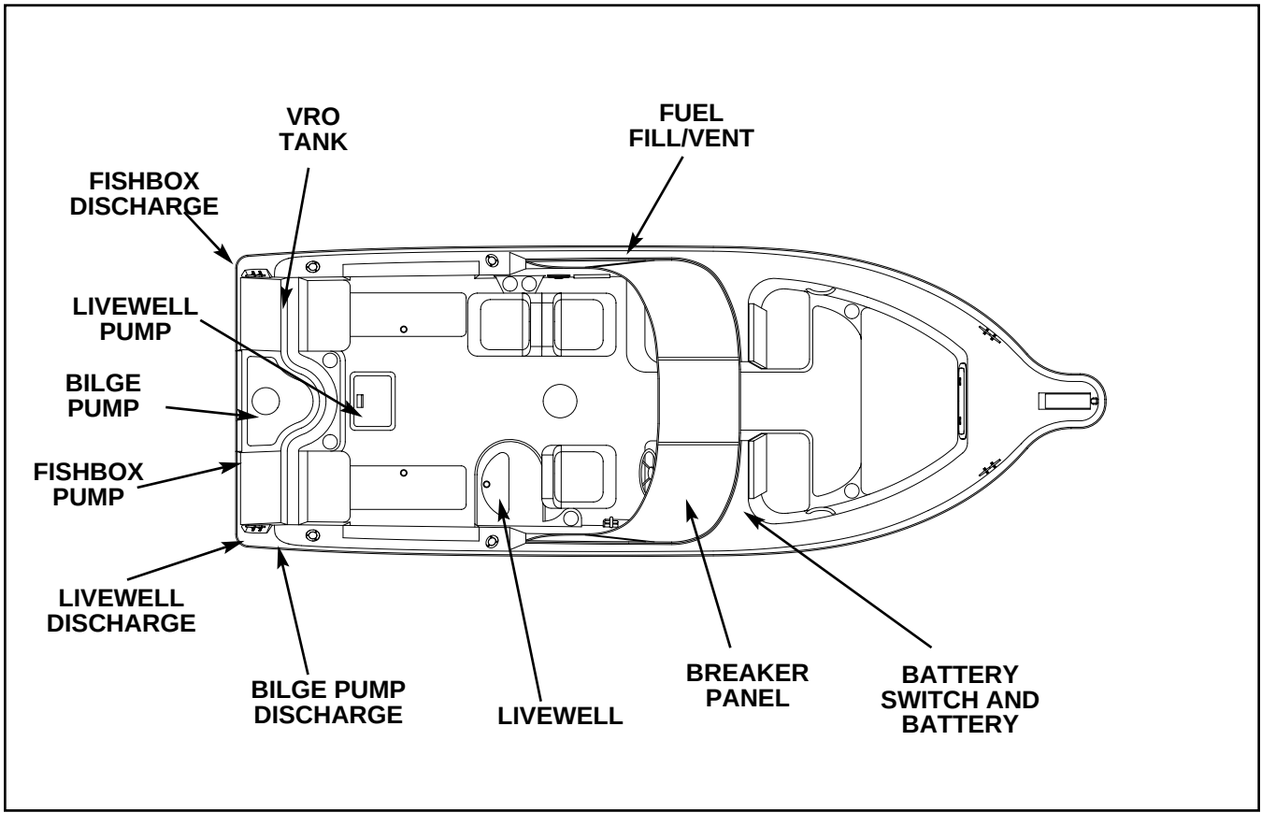

FIGURE 3.6 220 SPORTSMAN

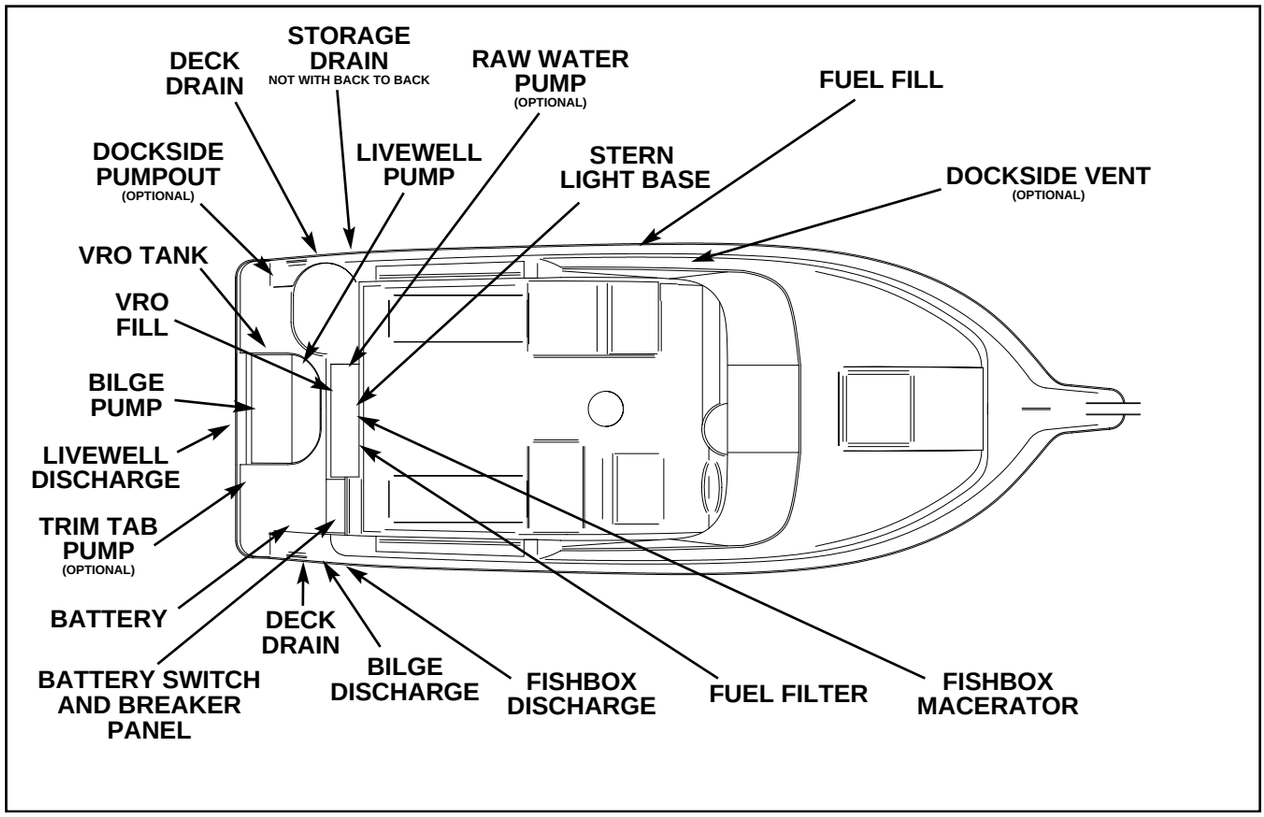

FIGURE 3.7 V21 CUDD Y

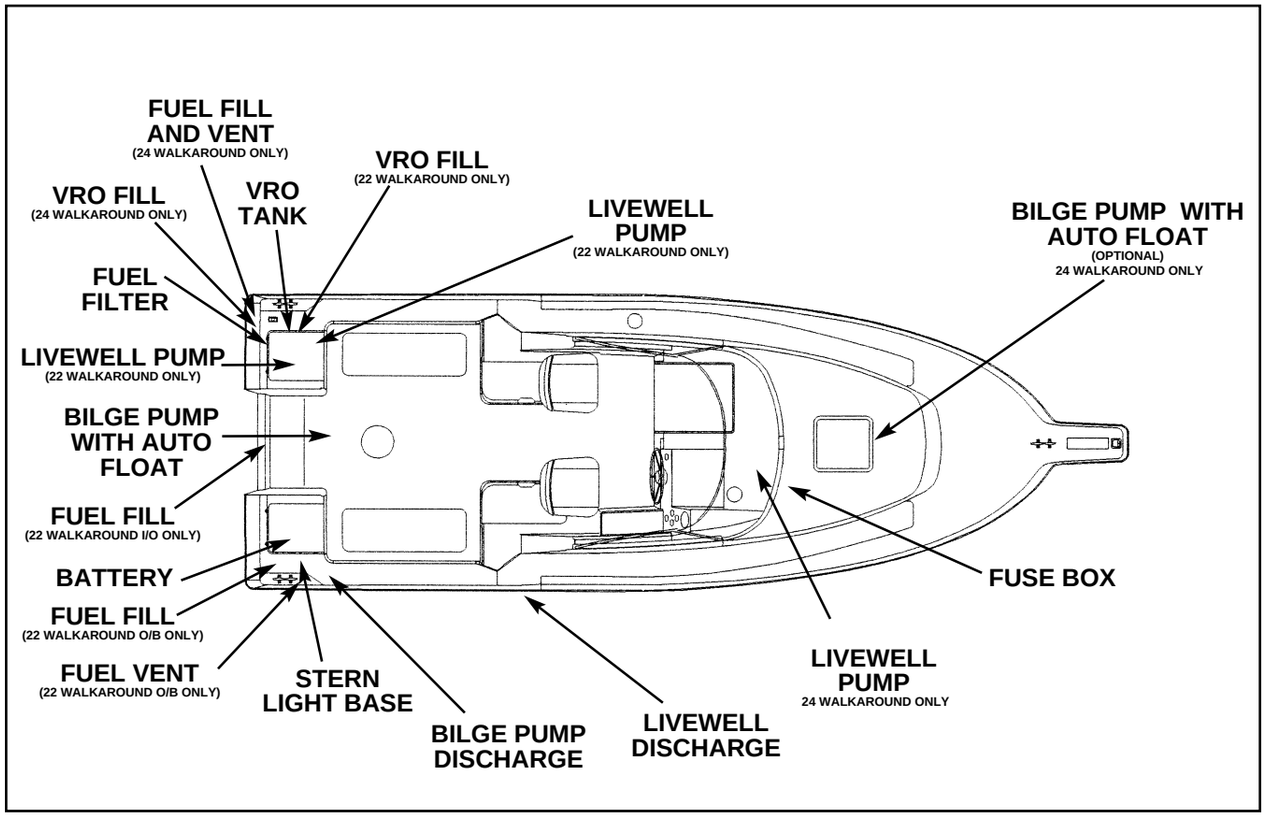

FIGURE 3.8 22 W ALKAROUND I/O , 22 W ALKAROUND O/B, 24 W ALKAROUND

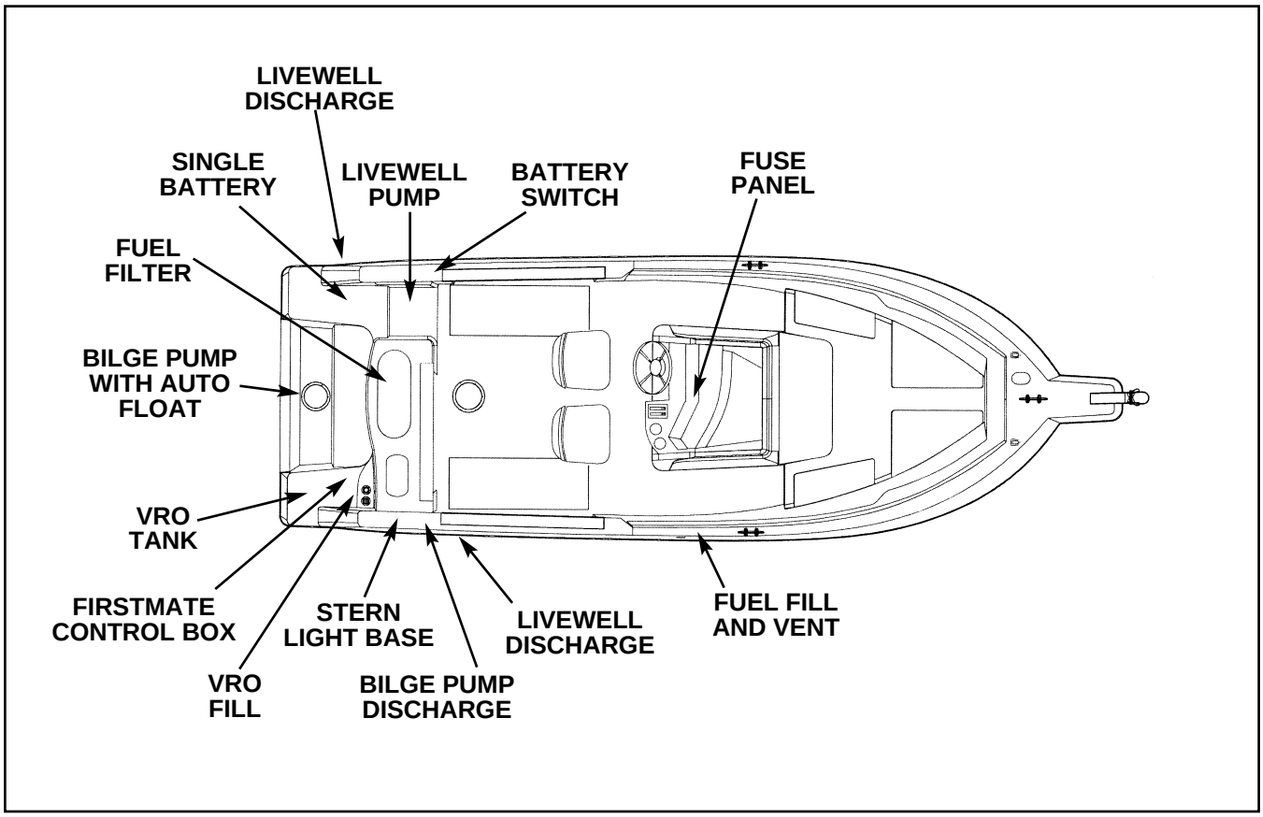

FIGURE 3.9 250 FISHERMAN O/B

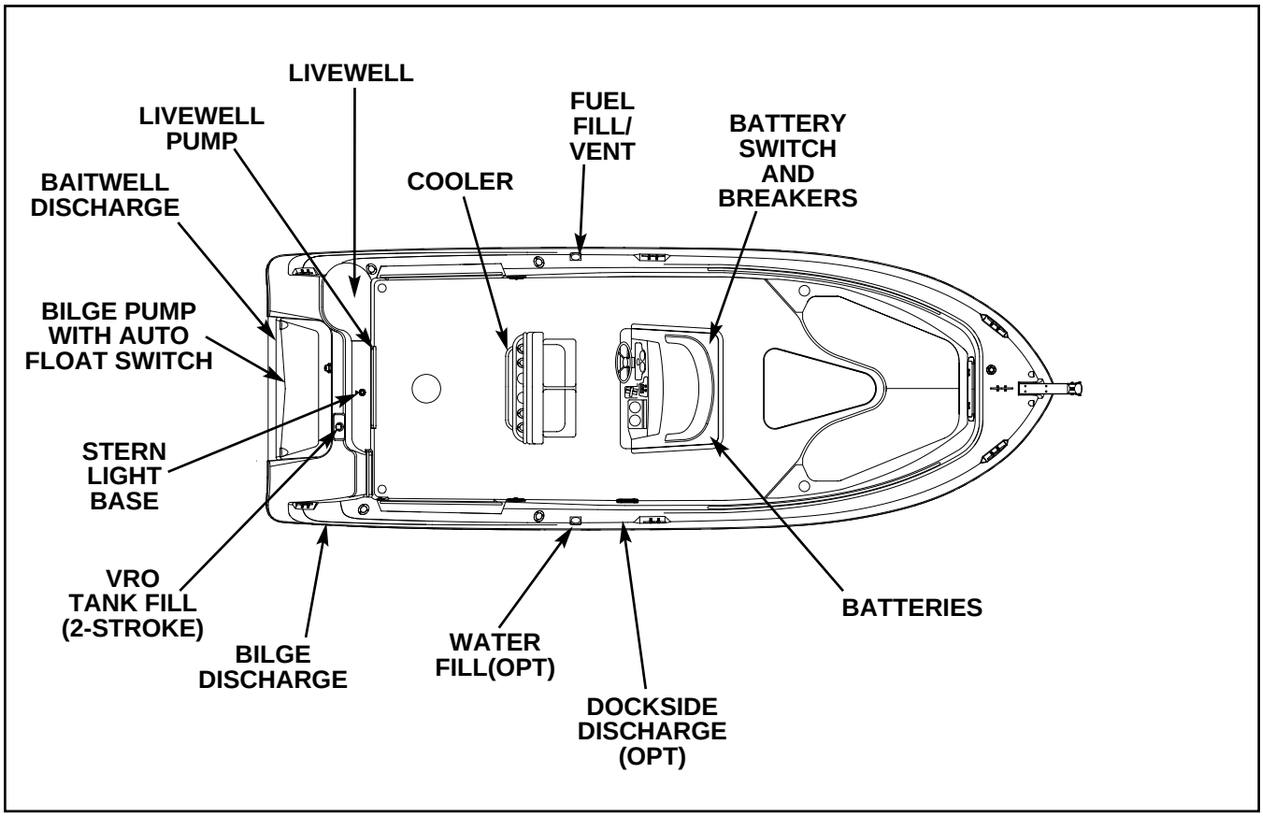

FIGURE 3.10 252 FISHERMAN O/B

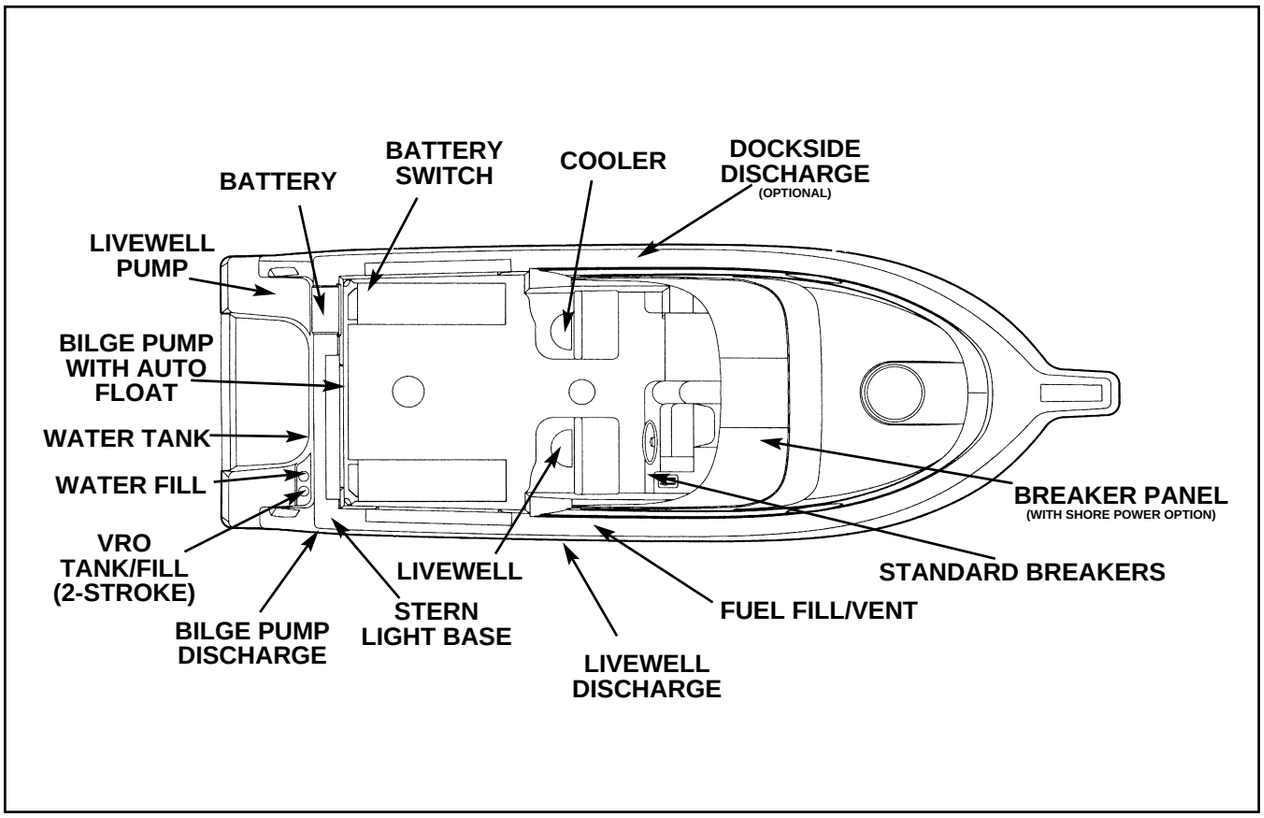

FIGURE 3.11 250 COAST AL O/B

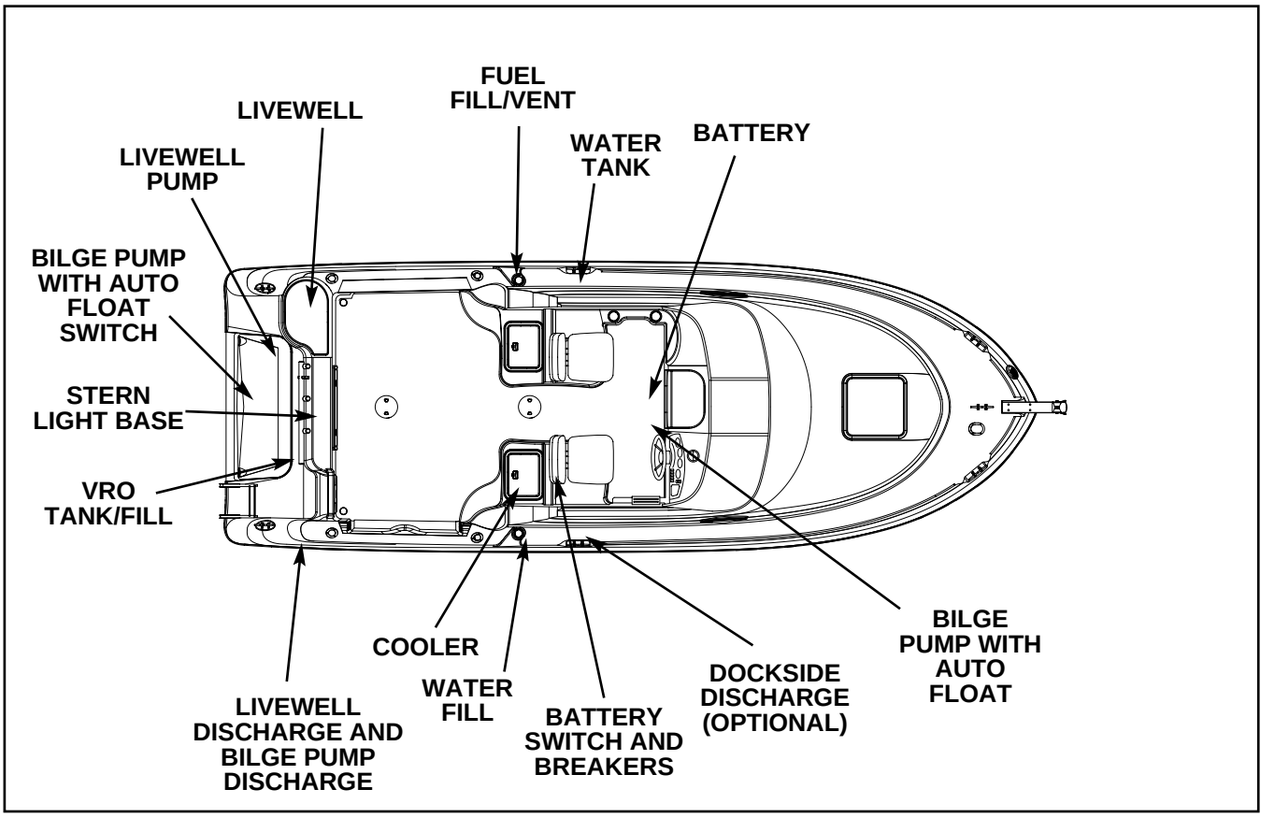

FIGURE 3.12 252 COAST AL O/B

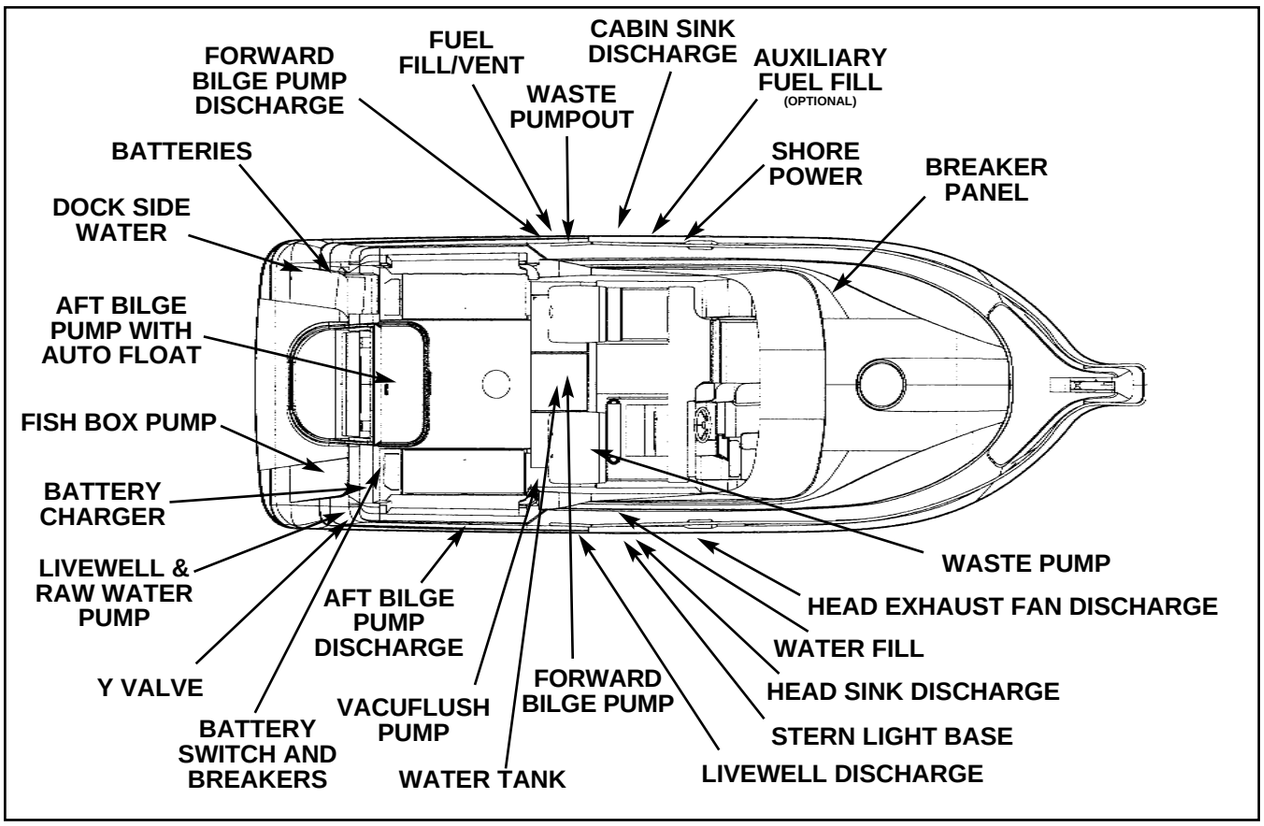

FIGURE 3.13 270 COAST AL I/O

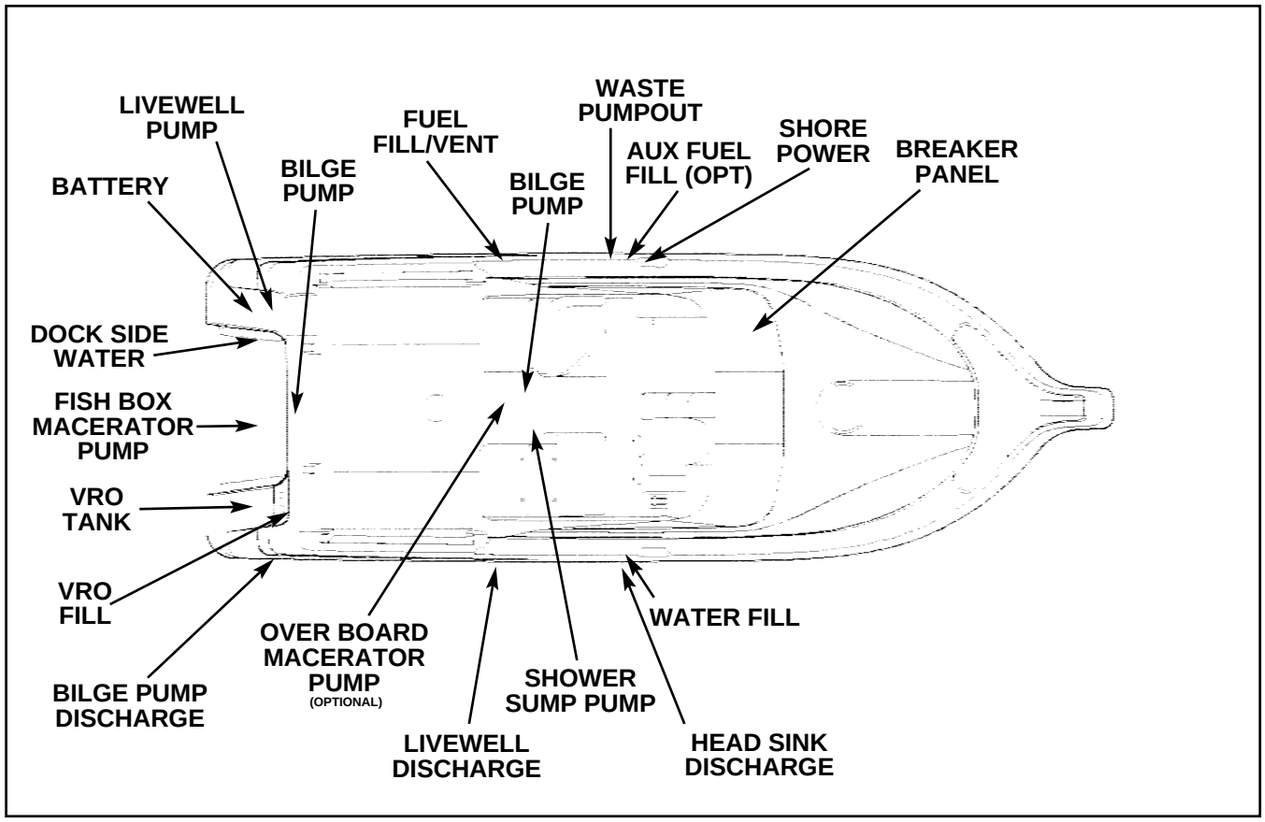

FIGURE 3.14 270 COAST AL O/B

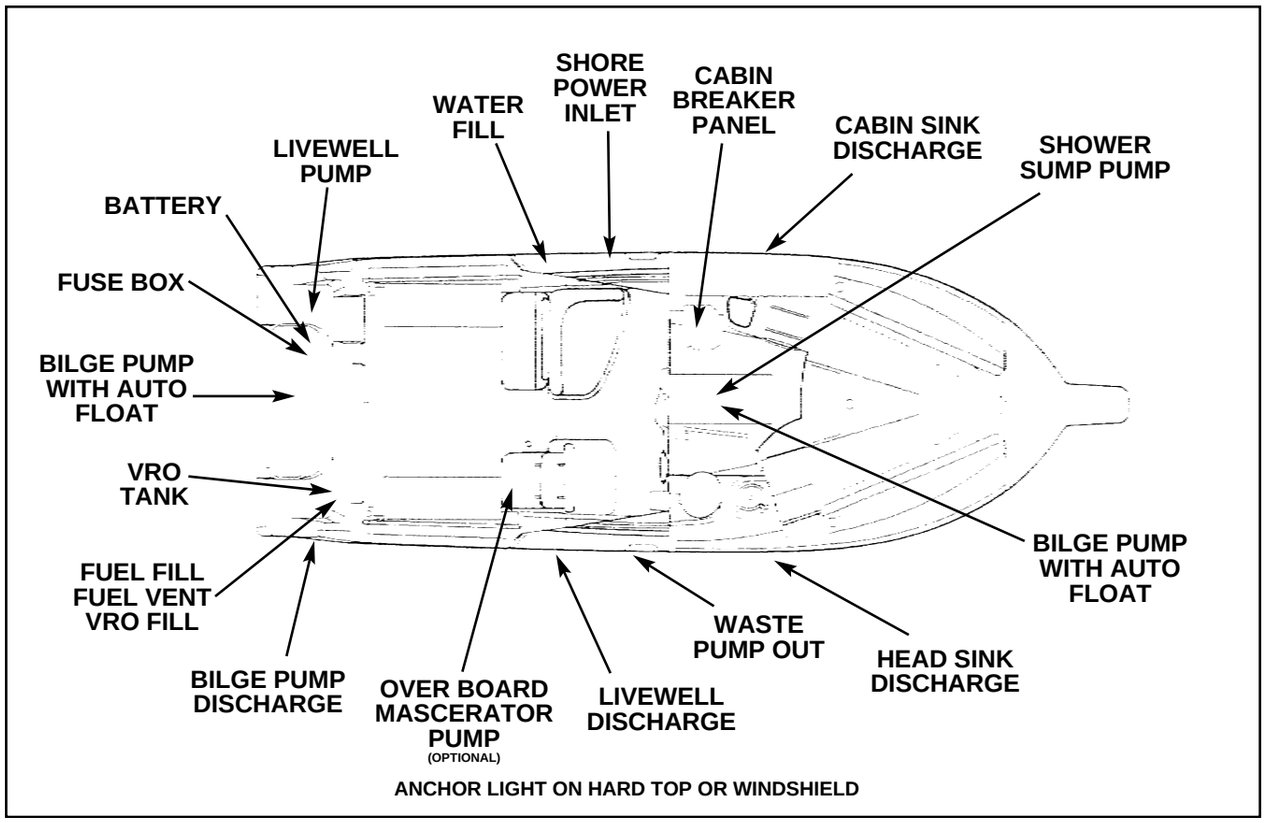

FIGURE 3.15 290 COAST AL

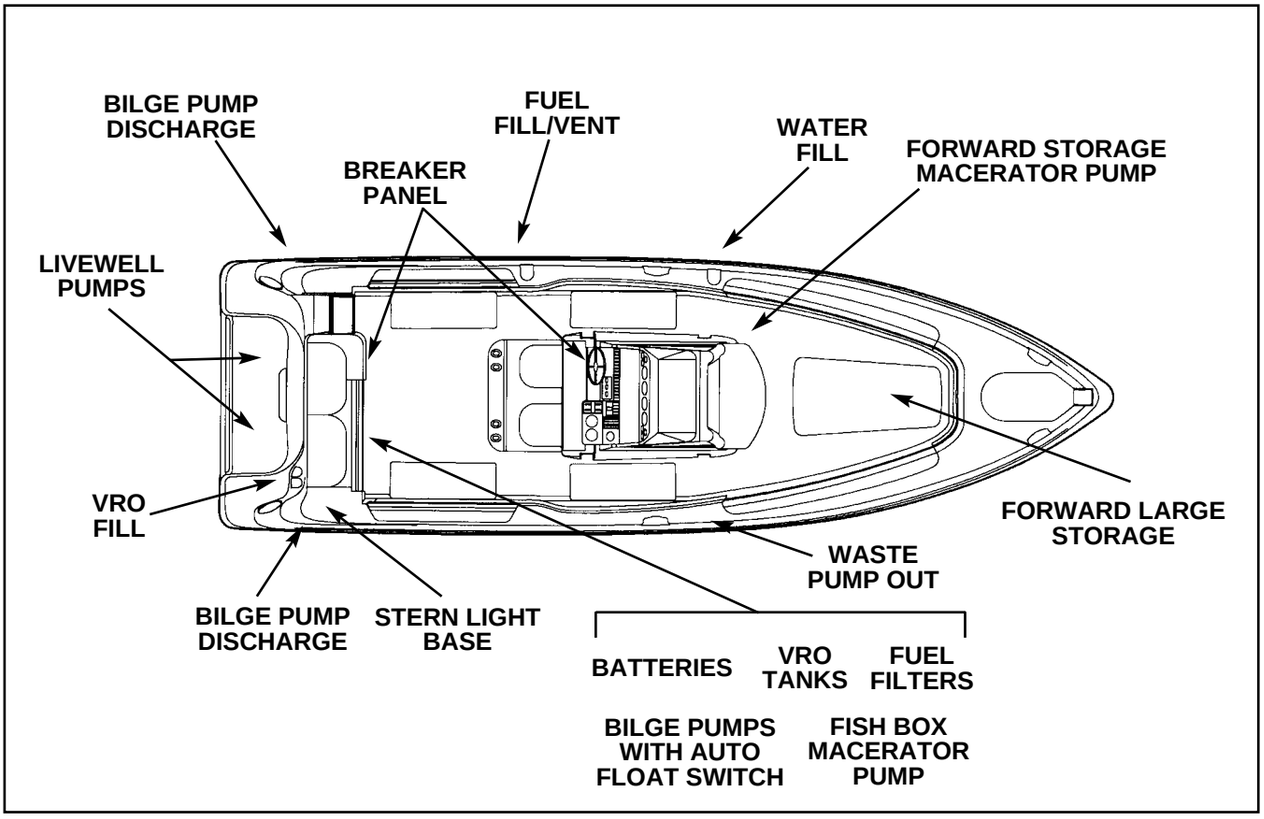

FIGURE 3.16 29 CCF

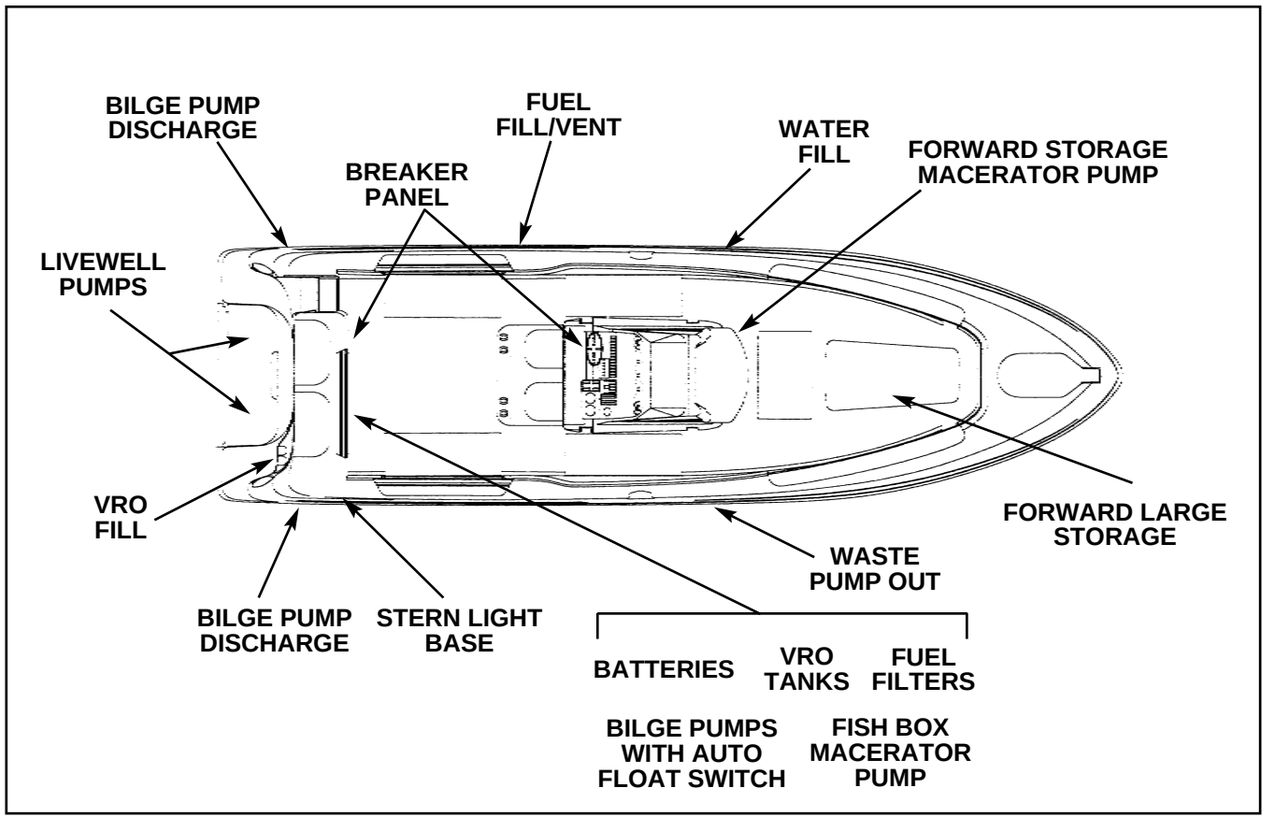

FIGURE 3.17 32/35 CCF

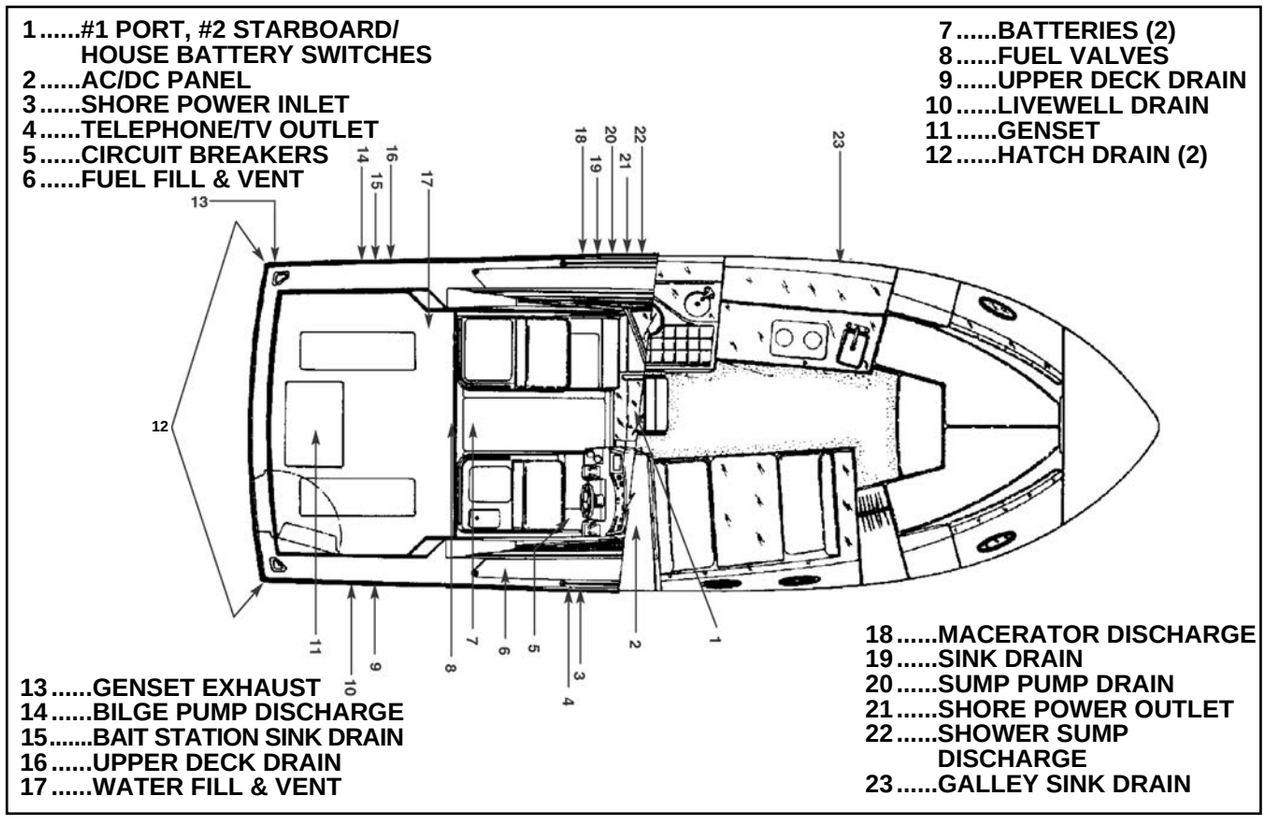

FIGURE 3.18 330 COAST AL

Wellcraft®

180 FISHERMAN

L.O.A.	18’ 0” (5.48 m)
Beam	8’ (2.44 m)
Dry weight (approx.)*	2065 lbs. (937 kg)
Fuel capacity (Gas)	49 gal. (185.5 L)
Max power @ prop	150 HP (111.9 kw)
Shaft length	20” (.51m)
Deadrise	20°
Draft: up (approx.)	15” (.38 m)
Transom height	20” (.51 m)
Bridge clearance w/o top (approx.)	4’ 5” (1.37 m)
Bridge clearance w/bimini top (approx.)	6’ 7” (2.01 m)

* Dry weight calculated does not include engine(s). Dry weight will vary with engine and options installed.

KEY SALES FEATURES

- Fiberglass foam filled stringers - composite transom
- Large console sits 2 comfortably behind windscreen
- Deep V-hull and wide beam creates a stable fishing platform and soft ride
- Location for trolling motor
- Easy access for batteries
- Complies with Coast Guard safety regulations
- 10-Year structural hull warranty - transferable
- NMMA Certified • Liner - fiberglass - diamond pattern skid resistant for easy maintenance

STANDARD EQUIPMENT

HULL & DECK
Anchor locker
Bow and stern eyes - stainless steel
Cleats - stainless steel
Foam flotation-level
Ladder - 2 step swing down
Rod holders (2) - stainless steel flush mount
Rod racks - under gunwale - port/stbd
Rub rail - heavy duty with stainless steel insert **(new)**
Swim platform - integrated
Thru hulls - stainless steel **(new)**
Windscreen - plexiglass

COCKPIT
Aft seats with removable cushions - port/stbd
Baitwell - 24 gal.
Beverage holders
Cockpit overboard scuppers
Foot rest - built-in at helm
Forward bow storage
Forward console seat with cushions
Hand holds
Helm seat - reversible with 76 qt. cooler

MECHANICAL
Accessory plug - 12V
Bilge pump with auto float switch - 500 GPH
Compass
Horn
Hoses - steel reinforced
Ignition - safety interlock system with lanyard
Instrumentation - tachometer, fuel, trim, and speedometer, systems check*
Navigation lights
**Propeller - aluminum
Steering - non-feedback
Steering wheel - stainless steel with power knob **(new)**
Switches - weather resistant

* Systems check available with specific engines
** Drop shipped and factory rigged engines only

OPTIONAL EQUIPMENT

Basic T-top includes 4 rod holders and T-top canvas (dealer installed)
Bimini top - premium canvas with stainless steel hardware
Bow cushion
Bow rail - full size **(new)**
Canada certification
CE certification (for Export only)
Cradle
**Hydraulic steering
Lean post seat with backrest and 72 qt. cooler
Pre-rig for Yamaha, Evinrude (Recommended HP: 90 hp to 150 hp, check for engine availability)
Raw water washdown
Rod holders (2 additional) - gunwale mount
Trailer - aluminum with brakes
Trailer - galvanized with brakes

* Note: Items in Packages cannot be ordered individually unless listed as stand-alone.
** Hydraulic steering std on 150 hp

COLOR OPTIONS

HULLSIDE COLOR OPTION UPGRADE
Fighting Lady Yellow
Hunter Green
Midnite Blue

ENGINE OPTIONS

Evinrude 115 E-Tec
Yamaha F 115 4-stroke
Yamaha F 150 4-stroke

PERFORMANCE DATA - Yamaha F115 4-Stroke

Top Speed	41.9 MPH @ 6000 RPM
Cruise Speed	28.2 MPH @ 4500 RPM
Cruise Range	312 Miles

Performance and fuel consumption will vary and be affected by water and weather conditions, altitude, load and condition of boat, engine and propeller(s). Cruise range based on 95% of fuel capacity. All data is illustrative and is not warranted. This test done with clean bottom, no bottom paint and light to average load.

Specifications, options, and equipment are subject to change without notice.

NOTES

Wellcraft®

195 BAY

L.O.A.	19’ 6” (5.94 m)
Beam	8’ 6” (2.59 m)
Dry weight (approx.)*	2333 lbs. (1058 kg)
Fuel capacity (Gas)	54 gal. (204.39 L)
Max power @ prop	200 HP (149.2 kw)
Transom height	25” (.63 m)
Dead rise	14°
Draft: engine up (approx.)	10” (.25 m)
Draft: engine down (approx.)	15” (.38 m)
Bridge clearance w/o top (approx.)	5’6” (1.68m)

* Dry weight calculated does not include engine(s). Dry weight will vary with engine and options installed.

KEY SALES FEATURES

- Console baitwell with light (29 gal.) with overboard drain
- Release well center transom
- Fwd and aft casting platform
- Fiberglass cockpit with pebble skid resistant surface
- All stainless steel deck hardware thru-bolted
- 10-year structural hull warranty - transferable
- Large fish box with drain
- Complies with Coast Guard safety regulations
- NMMA Certified

STANDARD EQUIPMENT

HULL & DECK
Anchor storage locker
Bow and stern eyes - stainless steel
Cleats - stainless steel (5) 6”
Rod holders (2) - gunwale mount - stainless steel **(new)**
Rub rail - heavy duty with stainless steel insert **(new)**
Skid resistant surfaces
Transom storage bin (removable) - stbd

COCKPIT
Baitwell with light (29 gal.) - forward console
Beverage holders
Cockpit courtesy lights
Cockpit overboard scuppers
Console rail - stainless steel
Console rod holders (8)
Flip back cooler seat - 92qt.
Forward bow dry storage
Forward casting platform
Forward console baitwell seat cushions
Release well - center transom
Windscreen - plexiglass

MECHANICAL
Accessory plug - 12V
Bilge pump with automatic float switch - 800 GPH
Horn - flush mount
Hydraulic steering
Ignition - safety interlock system with lanyard
Instrumentation - tachometer, fuel, speedometer, trim
Navigation lights
Propeller - aluminum
Steering wheel - stainless steel with power knob **(new)**
Switches - weather resistant

OPTIONAL EQUIPMENT

Aft bench seat with removable backrest
Baitwell with light (15gal.) - port transom
Basic - T-top includes 4 rod holders and t-top canvas (dealer installed)
Battery switch - dual
Battery charger with inlet (not available with trolling motor charging system)
Bimini top with boot - premium canvas with stainless steel hardware
Bow lifting ring
Bow cushions - port/stbd
Cleats stainless steel pull-up
Cockpit bolsters - port/stbd
Console cover - canvas
Forward platform casting seat
Fuel/water separator
Helm seat stainless with 5 position backrest & 94 qt. cooler (lean post seat opt N/A)
Lean post seat w/rod holders and 72 qt. cooler (helm seat SS 5-position backrest opt N/A)
Propeller - stainless steel
Rod racks - port/stbd
Stainless steel side rails
Steering - tilt hydraulic
Tackle Box - Center Console (3-drawer)
Trailer - Aluminum with brakes
Trailer - Galvanized with brakes
Trim tabs - electric
Trolling motor bow panel - 12/24 volt wiring system
Trolling motor charger system
Water pressure gauge
Windshield rail - removable (replaces standard rail)

***Preferred Option Package**
Compass
Half dive swim platform
Raw water washdown

*Note: Items in Packages cannot be ordered individually unless listed as stand-alone.

COLOR OPTIONS

Hullside Color Option Upgrade
Sea Blue
Sea Green
Sea Yellow

ENGINE OPTIONS

Evinrude 115 E-Tec	Yamaha F 115 4-stroke
Evinrude 150 E-Tec	Yamaha F 150 4-stroke
Evinrude 200 E-Tec	Yamaha F 200 4-stroke
Evinrude 200 E-Tec HO	

Specifications, options, and equipment are subject to change without notice.

PERFORMANCE DATA - Yamaha F150 4-Stroke

Top Speed	48 MPH @ 6000 RPM
Cruise Speed	31.5 MPH @ 4000 RPM
Cruise Range	240 Miles

Performance and fuel consumption will vary and be affected by water and weather conditions, altitude, load and condition of boat, engine and propeller(s). Cruise range based on 95% of fuel capacity. All data is illustrative and is not warranted. This test done with clean bottom, no bottom paint and light to average load.

Specifications, options, and equipment are subject to change without notice.

NOTES

NEW FOR 2007

Wellcraft®

202 FISHERMAN

L.O.A.	20’ 4” (6.20 m)
Beam	8’ 7” (2.61 m)
Dry weight (approx.)*	2750 lbs. (1247 kg)
Fuel capacity (Gas)	77 gal. (291.5 L)
Max power @ prop	200 HP (149.2 kw)
Transom height	25” (.64 m)
Dead rise	19˚
Draft: engine up (approx.)	15” (.38 m)
Draft: engine down (approx.)	33” (.68 m)
Bridge clearance w/o top (approx.)	5’ 5” (1.65 m)
Bridge clearance with top (approx.)	7’ 11” (2.41 m)
Bridge clearance w/bimini top (approx.)	7’ 6” (2.29 m)

* Dry weight calculated does not include engine(s). Dry weight will vary with engine and options installed.

KEY SALES FEATURES

• Insulated and lighted baitwell (104 qt.) with overboard drain
• Rod storage under gunwale port and starboard
• Stainless steel gunwale-mounted rod holders (2) with cap
• Fiberglass cockpit with diamond pattern skid resistant surfaces • All stainless steel deck hardware thru-bolted
• Complies with Coast Guard safety regulations
• 10-year structural hull warranty - transferable
• Insulated fish box with drain
• Foam filled, fiberglass, box section stringer with integral high density composite transom
• NMMA Certified

STANDARD EQUIPMENT

HULL & DECK
Anchor storage locker
Bow and stern eyes - stainless steel
Cleats - stainless steel
Ladder - 3 step stainless steel with hand grip
Rod holders (2) gunwale mounted - stainless steel
Rub rail - heavy duty with stainless steel insert
Stainless steel forward rails
Skid resistant surfaces
Thru hulls - stainless steel

COCKPIT
Aft seats with backrests and removable cushions port/stbd
Baitwell with light (104 qt.)
Beverage holders (6)
Cockpit courtesy lights
Cockpit overboard scuppers
Console rail - stainless steel
Footrest at helm
Forward bow storage
Forward console seat with cushions
Forward fish box - insulated with drain
Helm seat - reversible with 76 qt. cooler
Rod storage port & stbd under gunwale
Tackle box - 3-drawer
Windscreen - plexiglass

MECHANICAL
Accessory plugs - 12V (2)
Battery switch
Bilge pump with automatic float switch - 800 GPH
Circuit breakers - push to reset
Compass
Full instrumentation - tachometer, fuel, trim, and speedometer, volts, water pressure, systems check*
Horn - flush mount
Hoses - steel reinforced
Ignition - safety interlock system with lanyard
Navigation lights
**Propeller - aluminum
Steering - non-feedback
Steering wheel - stainless steel with power knob
Switches - weather resistant

* Systems check available with specific engines
** Drop shipped and factory rigged engines only

OPTIONAL EQUIPMENT

Battery switch - dual
Bimini top with boot - premium canvas with stainless steel hardware
Engine cowling cover - Sunbrella™ with logo for Yamaha F200 only
(Available through parts department only)
Forward casting platform cushion
Full bow rail
Heavy duty dive ladder
**Hydraulic tilt steering
Lean post seat with backrest and 72 qt. cooler
Pre-rig for Evinrude, Yamaha and Mercury Optimax
(Recommended HP: 115 hp to 200 hp check for engine availability)
Raw water washdown
Rod holders - (2) additional gunwale mount
Trailer - aluminum with brakes
Trailer - galvanized with brakes
T-top w/spreader light, gold tone rod holders and T-top canvas with PFD storage bag
VHF Radio - Ray 54
(only available with factory installed t-top)
Yamaha Command Link digital upgrade
(Yamaha engine only)

** Tilt hydraulic steering standard on 150 HP and up.

*Note: Items in Packages cannot be ordered individually unless listed as stand-alone.

COLOR OPTIONS

Hullside Color Option Upgrade
Fighting Lady Yellow
Hunter Green
Midnite Blue

ENGINE OPTIONS

Evinrude 150 E-Tec	Yamaha 115 4-stroke
Evinrude 200 E-Tec	Yamaha 150 4-stroke
Evinrude 200 E-Tec HO	Yamaha 200 4-stroke

PERFORMANCE DATA - Yamaha F150 4-Stroke

Top Speed	43.4 MPH @ 5900 RPM
Cruise Speed	29.2 MPH @ 4000 RPM
Cruise Range	345 Miles

Performance and fuel consumption will vary and be affected by water and weather conditions, altitude, load and condition of boat, engine and propeller(s). Cruise range based on 95% of fuel capacity. All data is illustrative and is not warranted. This test done with clean bottom, no bottom paint and light to average load.

Specifications, options, and equipment are subject to change without notice.

NOTES

Wellcraft®

212 FISHERMAN

L.O.A.	20’ 4” (6.20 m)
Beam	8’ 7” (2.61 m)
Dry weight (approx.)*	2750 lbs. (1247 kg)
Fuel capacity (Gas)	77 gal. (291.5 L)
Max power @ prop	200 HP (149.2 kw)
Transom height	25” (.64 m)
Dead rise	19˚
Draft: engine up (approx.)	15” (.38 m)
Draft: engine down (approx.)	33” (.68 m)
Bridge clearance w/o top (approx.)	5’ 5” (1.65 m)
Bridge clearance with top (approx.)	7’ 11” (2.41 m)
Bridge clearance w/bimini top (approx.)	7’ 6” (2.29 m)

* Dry weight calculated does not include engine(s). Dry weight will vary with engine and options installed.

KEY SALES FEATURES

- Insulated and lighted baitwell (104 qt.) with overboard drain
- Rod storage under gunwale port and starboard
- Stainless steel gunwale-mounted rod holders (2) with cap
- Fiberglass cockpit with diamond pattern skid resistant surfaces • All stainless steel deck hardware thru-bolted
- Complies with Coast Guard safety regulations
- 10-year structural hull warranty - transferable
- Insulated fish box with drain
- Self contained head in console
- Foam filled, fiberglass, box section stringer with integral high density composite transom
- NMMA Certified

STANDARD EQUIPMENT

HULL & DECK

Anchor storage locker
Bow and stern eyes - stainless steel
Cleats - stainless steel
Ladder - 3 step stainless steel with hand grip
Rod holders (2) gunwale mounted - stainless steel
Rub rail - heavy duty with stainless steel insert **(new)**
Stainless steel forward rails
Skid resistant surfaces
Thru hulls - stainless steel **(new)**

COCKPIT

Aft seats with backrests and removable cushions port/stbd
Baitwell with light (104 qt.)
Beverage holders (6)
Center console - with self contained head
Cockpit courtesy lights
Cockpit overboard scuppers
Console rail - stainless steel
Footrest at helm
Forward bow storage
Forward fish box - insulated with drain
Lean post seat with 2 rod holders and 2 drink holders
Rod storage port & stbd under gunwale
Windscreen - plexiglass

MECHANICAL

Accessory plugs - 12V (2)
Battery switch
Bilge pump with automatic float switch - 800 GPH
Circuit breakers - push to reset
Compass
Full instrumentation - tachometer, fuel, trim, and speedometer, volts, water pressure, systems check*
Horn - flush mount
Hoses - steel reinforced
Ignition - safety interlock system with lanyard
Navigation lights
**Propeller - aluminum
Steering - hydraulic tilt
Steering wheel - stainless steel with power knob **(new)**
Switches - weather resistant

* Systems check available with specific engines
** Drop shipped and factory rigged engines only

OPTIONAL EQUIPMENT

Backrest for lean post seat
Basic T-top includes 4 rod holders and T-top canvas (dealer installed)
Battery switch - dual
Bimini top with boot - premium canvas with stainless steel hardware
CE certification (for export only)
Cooler 72 qt. (under lean post) removable
Engine cowling cover - Sunbrella™ with logo for Yamaha F200 only (Available through parts department only)
Forward casting platform cushion
Forward console cooler seat (72 qt.)
Full bow rail
Heavy duty dive ladder
Pre-rig for Evinrude, Yamaha and Mercury Optimax (Recommended HP: 115 hp to 200 hp check for engine availability)
Raw water washdown
Rod holders - (2) additional gunwale mount
Trailer - aluminum with brakes
Trailer - galvanized with brakes
T-top canvas enclosure - 3 sided **(new)**
T-top deluxe w/spreader light, gold tone rod holders and electronics box, and T-top canvas with PFD storage bag
VHF Radio - Ray 54 (only available with factory installed t-top)
Yamaha Command Link digital upgrade (Yamaha engine only)

** Tilt hydraulic steering standard on 150 HP and up.

*Note: Items in Packages cannot be ordered individually unless listed as stand-alone.

COLOR OPTIONS

Hullside Color Option Upgrade
Fighting Lady Yellow
Hunter Green
Midnite Blue

ENGINE OPTIONS

Evinrude 150 E-Tec
Evinrude 200 E-Tec
Evinrude 200 E-Tec HO
Yamaha 150 4-stroke
Yamaha 200 4-stroke

PERFORMANCE DATA - Yamaha F150 4-Stroke

Top Speed	43.3 MPH @ 5700 RPM
Cruise Speed	29.9 MPH @ 4000 RPM
Cruise Range	312 Miles

Performance and fuel consumption will vary and be affected by water and weather conditions, altitude, load and condition of boat, engine and propeller(s). Cruise range based on 95% of fuel capacity. All data is illustrative and is not warranted. This test done with clean bottom, no bottom paint and light to average load.

Specifications, options, and equipment are subject to change without notice.

NOTES

Wellcraft®

215 BAY

L.O.A.	21’ 6” (6.55 m)
Beam	8’ 6” (2.59 m)
Dry weight (approx.)*	2584 lbs. (1172 kg)
Fuel capacity (Gas)	54 gal. (204.39 L)
Max power @ prop	225 HP (167.85 kw)
Transom height	25” (.63 m)
Dead rise	14°
Draft: engine up (approx.)	10” (.25 m)
Draft: engine down (approx.)	15” (.38 m)
Bridge clearance w/o top (approx.)	5’6” (1.68 m)

* Dry weight calculated does not include engine(s). Dry weight will vary with engine and options installed.

KEY SALES FEATURES

- Console baitwell with light (29 gal.) with overboard drain
- Release well center transom
- Fwd and Aft casting platforms
- Fiberglass cockpit with pebble skid resistant surfaces
- Fwd Rod Locker
- All stainless steel deck hardware thru-bolted
- 10-year structural hull warranty - transferable
- Large fish box with drain
- Complies with Coast Guard safety regulations
- NMMA Certified

STANDARD EQUIPMENT

HULL & DECK
Anchor storage locker
Bow and stern eyes - stainless steel
Cleats - stainless steel (6) 6”
Rod holders (2) - gunwale mount stainless steel **(new)**
Rub rail -heavy duty with stainless steel insert **(new)**
Skid resistant surfaces
Transom storage bin (removable)- stbd

COCKPIT
Baitwell with light (29 gal.) - fwd console
Beverage holders
Cockpit courtesy lights
Cockpit overboard scuppers
Console rail - stainless steel
Console rod holders (8)
Flip back cooler seat - 92 qt.
Forward bow dry storage
Forward casting platform
Forward console baitwell seat cushions
Forward fish box - insulated with overboard drain
Release well - center transom
Rod storage - lockable - port forward box
Windscreen - plexiglass

MECHANICAL
Accessory plug - 12V
Bilge pump with automatic float switch - 800 GPH
Horn - flush mount
Hydraulic steering
Ignition - safety interlock system with lanyard
Instrumentation - tachometer, fuel, speedometer, trim
Navigation lights
Propeller - aluminum
Steering wheel - stainless steel with power knob **(new)**
Switches - weather resistant

OPTIONAL EQUIPMENT

Aft bench seat with removable backrest
Baitwell with light (15 gal.) - port transom
Battery switch - dual
Basic T-top includes 4 rod holders and t-top canvas (dealer installed)
Battery charger w/inlet (not available with trolling motor charger system)
Bimini top w/boot - premium canvas with stainless steel hardware
Bow cushions - port/stbd
Bow lifting ring
Cleats stainless steel pull-up
Cockpit bolsters - port/stbd
Console cover - canvas
Forward platform casting seat
Fuel/water separator
Helm seat stainless with 5 position backrest & 94 qt. cooler (Lean post seat opt N/A)
Lean post seat w/rod holders and 72 qt. cooler (helm seat SS 5-position backrest opt N/A)
Propeller - stainless steel
Rod racks - port/stbd
Stainless steel side rails
Steering - tilt hydraulic (std 200 hp and above)
Tackle box - console (3 drawer)
Trailer - Aluminum with brakes
Trailer - Galvanized with brakes
Trim tabs - electric
Trolling motor bow panel - 12/24 volt wiring system
Trolling motor charger system
Water pressure gauge
Windshield rail - removable (replaces standard rail)

***Preferred Option Package**
Compass
Half dive swim platform
Raw water washdown

*Note: Items in Packages cannot be ordered individually unless listed as stand-alone.

COLOR OPTIONS

Hullside Color Option Upgrade
Sea Blue
Sea Green
Sea Yellow

ENGINE OPTIONS

Evinrude 150 E-Tec	Yamaha F 150 4-stroke
Evinrude 200 E-Tec	Yamaha F 200 4-stroke
Evinrude 200 E-Tec HO	Yamaha F 225 4-stroke
Evinrude 225 E-Tec	

Specifications, options, and equipment are subject to change without notice.

PERFORMANCE DATA - Yamaha F150 4-Stroke

Top Speed	47.6 MPH @ 6000 RPM
Cruise Speed	30.9 MPH @ 4000 RPM
Cruise Range	220 Miles

Performance and fuel consumption will vary and be affected by water and weather conditions, altitude, load and condition of boat, engine and propeller(s). Cruise range based on 95% of fuel capacity. All data is illustrative and is not warranted. This test done with clean bottom, no bottom paint and light to average load.

Specifications, options, and equipment are subject to change without notice.

NOTES

Wellcraft®

220 SPORTSMAN

L.O.A.	22’ 4” (7.07 m)
Centerline Hull	20’ 8” (6.5 m)
Beam	8’ 3” (2.51 m)
Dry weight (approx.)*	3508 lbs. (1591 kg)
Fuel capacity (Gas)	100 gal. (375 L)
Water capacity	8 gal. (30.3 L)
Max power @ prop	250 HP (186 kw)
Transom height	25” (.64 m)
Dead rise	18˚
Draft: engine up (approx.)	15” (.38 m)
Draft: engine down (approx.)	33” (.68 m)
Bridge clearance w/o top (approx.)	5’ 3” (1.6 m)
Bridge clearance w/bimini top (approx.)	6’ 9” (2.05 m)

* Dry weight calculated does not include engine(s). Dry weight will vary with engine and options installed.

KEY SALES FEATURES

• Insulated and lighted baitwell (100 qt.) with overboard drain • Raw water washdown • Rod storage under gunwale port and starboard • Stainless steel gunwale-mounted rod holders (4) with cap • Tackle storage 3-drawer • Enclosed head compartment • Fiberglass cockpit with diamond pattern skid resistant surfaces • All stainless steel deck hardware thru-bolted • Multi-purpose boat • Complies with Coast Guard safety regulations • 10-year structural hull warranty - transferable • Below deck ski/wake board storage • Insulated fish boxes - port/stbd with overboard pumpout • Foam filled, fiberglass, box section stringer with integral high density composite transom • NMMA Certified

STANDARD EQUIPMENT

HULL & DECK
Anchor storage locker
Bow and stern eyes - stainless steel
Bow pulpit with roller
Bow rail heavy duty stainless steel
Cleats - stainless steel (7)
Integrated swim platform
Ladder - 3-step stainless steel swing down
Rub rail - heavy duty with stainless steel insert **(new)**
Skid resistant surfaces
Stainless steel rails
Thru hulls - stainless steel **(new)**

COCKPIT
Aft seats - port/stbd with bolsters
Baitwell with light (100 qt.)
Beverage holders (7)
Bow cushion, with forward port/stbd bolsters
Cockpit bolsters - port/stbd
Cockpit courtesy lights
Cockpit overboard scuppers
Enclosed head compartment with self-contained head
Forward console cushions port/stbd with backrest
Glove box - lockable
Pedestal seat w/cushion stbd
Seat - back to back port side converts to lounge
Rod holders (4) gunwale mounted w/cap
Rod storage port & stbd
Side grab-rails integrated
Ski/Wake board storage
Storage under console
Tackle storage box
Windshield - curved tempered glass and walk thru door

MECHANICAL
Accessory plugs - 12V (2)
Battery switch - dual
Bilge pump with automatic float switch (1)
Compass
Full instrumentation - tachometer, volt, fuel, trim, and speedometer, water pressure, systems check*
Horn - flush mount
Hoses - steel reinforced
Navigation lights
Power & space for electronics at helm
**Propeller - aluminum (200 HP and below)
Raw water washdown
Remote oil fill (2-stroke)
Steering - tilt hydraulic
Steering wheel - stainless steel with power knob **(new)**
Switches - weather resistant

* Systems check available with specific engines
** Drop shipped and factory rigged engines only

OPTIONAL EQUIPMENT

Bimini top - premium canvas with stainless steel hardware, windshield connector, canvas curtain at bow walk thru
Bow cover
Bow filler w/cushions - stowable
Canada Certification
Cockpit cover
Dive ladder - heavy duty
Engine cowling cover - Sunbrella™ with logo for Yamaha F200, F225 and F250 only (available through parts department only)
Pre-rig for Evinrude, Yamaha and Mercury Optimax (Recommended HP: 150 hp to 250 hp, check for engine availability)
Pressurized fresh water system with 8 gal. tank and faucet
Ski pylon
Trailer - Aluminum with brakes
Trailer - Galvanized with brakes
Trim tabs (requires heavy duty dive ladder)
Walk-thru bifold door
Yamaha Command Link digital upgrade (Yamaha engine only)

***Sirius Satellite Radio System**
Clarion AM/FM CD player
Sirius Satellite receiver and antenna
4 speakers

***Seating Package**
Portside ped seat with 48 qt. cooler and cushion (replaces std port lounge seat)

***Canvas Package**
Canvas side and drop curtains

*Note: Items in Packages cannot be ordered individually unless listed as stand-alone.

COLOR OPTIONS

Hullside Color Option Upgrade
Fighting Lady Yellow
Hunter Green
Midnite Blue

ENGINE OPTIONS

Evinrude 200 E-Tec
Evinrude 200 E-Tec HO
Evinrude 225 E-Tec
Evinrude 250 E-Tec
Yamaha F 200 4-stroke
Yamaha F 225 4-stroke
Yamaha F 250 4-stroke

PERFORMANCE DATA - YAMAHA F250 4-stroke

Top Speed	49.1 MPH @ 6000 RPM
Cruise Speed	32.4 MPH @ 4000 RPM
Cruise Range	300 Miles

Performance and fuel consumption will vary and be affected by water and weather conditions, altitude, load and condition of boat, engine and propeller(s). Cruise range based on 95% of fuel capacity. All data is illustrative and is not warranted. This test done with clean bottom, no bottom paint and light to average load.

Specifications, options, and equipment are subject to change without notice.

NOTES

Wellcraft®

232 FISHERMAN

L.O.A.	22’ 4” (6.81 m)
Beam	8’ 8” (2.64 m)
Dry weight (approx.)*	3573 lbs. (1621 kg)
Fuel capacity (Gas)	115 gal. (435.32 L)
Water capacity (option)	8 gal. (30.28 L)
Max power @ prop	300 HP (224 kw)
Shaft length single	25” (.64 m)
Dead rise	20°
Draft: engine up (approx)	15” (.38 m)
Draft: engine down (approx)	32” (.81 m)
Bridge clearance w/o top (approx)	6’ 0” (1.83 m)
Bridge clearance with T-Top (approx)	8’ 4” (2.53 m)

* Dry weight calculated does not include engine(s). Dry weight will vary with engine and options installed.

KEY SALES FEATURES

• Full height transom • Foam filled, fiberglass, box section stringer with integral high density composite transom
• Recessed stainless steel grab rails - port/stbd bow
• Full FRP head console liner with toilet paper holder and battery access • Fish boxes (2) forward 155 qt. w/overboard drain and sealed lids • Rod storage under gunwale port and starboard
• Stainless steel gunwale-mounted rod holders (2)
• Fiberglass cockpit with diamond pattern skid resistant surfaces • All stainless steel deck hardware thru-bolted
• Complies with Coast Guard safety regulations
• 10-year structural hull warranty - transferable
• NMMA Certified

STANDARD EQUIPMENT

HULL & DECK

Anchor rope locker w/hawse pipe
Anchor roller with cleat
Bow and stern eyes - stainless steel
Cleats (7) 8" stainless steel
Gunnel caps port/stbd with integrated stainless steel side grab rails
Rod holders (4) stainless steel w/cap
Rub Rail - heavy duty with stainless steel insert **(new)**
Stainless steel rails
Swim platform - integrated
Swim ladder - flip down
Thru hulls - stainless steel **(new)**
Transom full height with door
Windscreen - curved plexiglass

COCKPIT

Baitwell - 84 qt. with light and overboard drain
Beverage holders (6)
Cockpit courtesy lights
Cockpit overboard scuppers
Fish boxes (2) 155qt. - forward with overboard drain and sealed lids
Fold away rear bench seat with cushion and aft bolster **(new)**
Glove box at helm
Hand holds recessed port/stbd stainless
Leaning post seat with (2) rod holders and (2) drink holders
Raw water washdown **(new)**
Rod storage under gunwale port/stbd
Skid resistant surfaces
Tackle storage boxes (2) with removable trays (4)
T-top with (4) rod holders, outrigger plates, spreader light, and PFD storage **(new)**

MECHANICAL

Accessory plug - (1) 12V at helm
Accessory switches (2)
Baitwell pump - 700 gph
Battery switch - dual with 2 trays
Bilge pump automatic float switch 800 gph aft
Breakers at helm - weather resistant
Compass
Full instrumentation - digital **(new)**
Horn - flush mount
Hoses - steel reinforced
Ignition - safety interlock system with lanyard
Navigation lights
**Propeller - aluminum (200 HP and below)
Remote oil fill (2-stroke)
Steering - hydraulic tilt
Steering wheel - stainless steel with power knob **(new)**
Submersible rated electrical connections
Switches - weather resistant

HEAD CONSOLE

Battery storage with tray(s) below deck
Dome light - 12V
Full fiberglass liner - skid resistant w/integrated step
Full access to console rigging
Head console lockable entry door - full size
Head - self contained (non-plumbed)
Port light opening with screen **(new)**
Toilet paper holder

** Drop shipped and factory rigged engines only

OPTIONAL EQUIPMENT

Backrest - for lean post seat
Bow cushions - port/stbd
Canada certification
CE certification (for export only)
Cooler - 72 qt. (under lean post - removable)
Electronics box (for T-top)
Engine cowling cover - Sunbrella™ with logo for Yamaha F200, F225 and F250 only (available through parts department only)
Forward console cooler seat (72 qt.) with seat back and bottom cushions
Heavy duty dive ladder
Outrigger - Taco Grand Slam - 15' poles **(new)**
Pressurized fresh water system with transom shower
Pre-rig for Evinrude, Mercury and Yamaha (Recommended hp: 150 to 300 hp, check for engine availability)
Trailer - Aluminum with brakes
Trailer - Galvanized with brakes
Trim Tabs - requires heavy duty dive ladder (replaces standard swim ladder)
T-top canvas enclosure **(new)**

***Cockpit Bolster Package**
Aft cockpit bolsters - port/stbd
Forward bow cockpit bolsters port/stbd

***Sirius Satellite Radio System**
Clarion AM/FM CD player,
Sirius satellite receiver, antenna
4 Speakers

***Ray Marine C80 Electronics Package 8.4" Color Display**
(Unit is radar ready - additional components required)
Includes chartplotter& HDFI fishfinder
VHF Radio - Ray 54

*Note: Items in Packages cannot be ordered individually unless listed as stand-alone.

COLOR OPTIONS

Hullside Color Option Upgrade
Fighting Lady Yellow
Hunter Green
Midnite Blue

ENGINE OPTIONS

Merc 200 Verado 4-stroke
Merc 225 Verado 4-stroke
Merc 250 Verado 4-stroke
Merc 275 Verado 4-stroke
Evinrude 200 E-Tec
Evinrude 200 E-Tec HO
Evinrude 225 E-Tec
Evinrude 250 E-Tec
Yamaha F 200 4-stroke
Yamaha F 225 4-stroke
Yamaha F 250 4-stroke

PERFORMANCE DATA - Yamaha F250 4-stroke

Top Speed	49.3 MPH @ 6000 RPM
Cruise Speed	32.3 MPH @ 4000 RPM
Cruise Range	405 Miles

Performance and fuel consumption will vary and be affected by water and weather conditions, altitude, load and condition of boat, engine and propeller(s). Cruise range based on 95% of fuel capacity. All data is illustrative and is not warranted. This test done with clean bottom, no bottom paint and light to average load.

Specifications, options, and equipment are subject to change without notice.

Wellcraft®

232 COASTAL

L.O.A.	22’ 4” (6.8 m)
Beam	8’ 8” (2.64 m)
Dry Weight (approx.)*	3600 lb (1633 kg)
Fuel capacity (Gas)	115 gal (435.32 L)
Water Capacity	8 gal (30.28 L)
Max hp power @ prop	300 hp (224 kw)
Shaft Length Single	25” (.64 m)
Dead Rise	20˚
Draft: engine up (approx)	15” (.38 m)
Draft: engine down (approx)	32” (.81 m)
Bridge clearance w/o top (approx)	6’ 0” (1.83 m)
Bridge clearance w/bimini top (opt) (approx)	8’ 0” (2.43 m)
Bridge clearance w/Hardtop (approx)	8’ 1” (2.43 m)

* Dry weight calculated does not include engine(s). Dry weight will vary with engine and options installed.

KEY SALES FEATURES

• Full height transom • Foam filled, fiberglass, box section stringer with integral high density composite transom • Recessed stainless grab rails - port/stbd • Full FRP cabin liner with diamond pattern skid resistant surfaces • Fish box stbd below helm seat 90 qt. w/overboard drain • Dry storage port below companion seat 90 qt. • Lighted baitwell 84 qt. with overboard drains • Rod storage under gunwale port and starboard • Stainless steel gunwale-mounted rod holders (2) • Fiberglass cockpit with diamond pattern skid resistant surfaces • All stainless steel deck hardware thru-bolted • Complies with Coast Guard safety regulations • 10-year structural hull warranty - transferable • NMMA Certified

STANDARD EQUIPMENT

HULL & DECK

Anchor rope locker w/hawse pipe
Anchor roller with cleat
Bow and stern eyes - stainless steel
Cleats (7) 8" stainless steel
Gunnel caps - port/stbd with integrated stainless steel side grab rails
Rod holders (2) stainless steel w/cap
Rub rail - heavy duty with stainless steel insert **(new)**
Stainless steel rails
Swim platform - integrated
Swim ladder - flip down
Thru hulls - stainless steel **(new)**
Transom full height with door
Windshield - curved tempered Solex® glass

COCKPIT

Baitwell - 84 qt. with light and overboard drain
Beverage holders
Cockpit courtesy lights
Cockpit overboard scuppers
Dry storage (1) 90qt. - port mid-ship with sealed lid & drain
Fishbox (1) 90 qt. stbd - mid-ship with overboard drain and sealed lid
Fold away rear bench seat with cushion and aft bolster **(new)**
Hardtop molded with (4) rod holders, electronics flat, spreader light, and over-head incandescent lights **(new)**
Pedestal seats adjustable with cushions port/stbd
Raw water washdown **(new)**
Rod storage under gunwale port/stbd
Skid resistant surfaces

MECHANICAL

Accessory plug - 12V at helm
Accessory switches (2)
Baitwell pump - 700 gph
Battery switch - dual with 2 trays
Breakers at helm - weather resistant
Bilge pump automatic float switch 800 gph aft
Compass
Full instrumentation - digital **(new)**
Horn - flush mount
Hoses - steel reinforced
Ignition - safety interlock system with lanyard
Navigation lights
**Propeller - aluminum (200 HP and below)
Remote oil fill (2-stroke)
Steering - hydraulic tilt
Steering wheel - stainless steel with power knob **(new)**
Submersible rated electrical connections
Switches - weather resistant
Windshield wipers port/stbd **(new)**

CABIN

Battery storage with tray(s)
Bi-fold locking entry door
Carbon monoxide detector
Deck hatch - with screen
Galley with sink, storage, and pressurized fresh water
Dome light - 12V w/switch
Full fiberglass liner - skid resistant with integrated step
Hatch access to helm console rigging
Head - self contained (non-plumbed)
Toilet paper holder
Rope locker access hatch
V-berth with storage
V-berth cushions

** Drop shipped and factory rigged engines only.

OPTIONAL EQUIPMENT cont.

Bimini top w/boot - premium canvas with stainless steel hardware (replaces std. hardtop)
Canada certification
CE certification (for export only)
Cockpit bolsters - port/stbd
Dinette table with V-Berth filler cushion
Engine cowling cover - Sunbrella™ with logo for Yamaha F200, F225 and F250 only (available through parts department only)
Heavy duty dive ladder
Pre-rig for Evinrude, Mercury and Yamaha (Recommended hp: 150 to 300 hp, check for engine availability)
Port/Stbd jump seat cushions with backrest
Stove - butane (not available for CE)
Trailer - Aluminum with brakes
Trailer - Galvanized with brakes
Transom shower - fresh water
Trim Tabs - requires heavy duty dive ladder (replaces standard swim ladder)

***Sirius Satellite Radio System**
Clarion AM/FM CD player with remote at helm
Sirius satellite receiver, antenna
4 Speakers

***Canvas Package for Bimini Top**
Side and drop curtains with windshield connector

***Canvas Package for Hard Top**
Side and drop curtains with windshield connector **(new)**

***Ray Marine C80 Electronics Package 8.4" Color Display**
(Unit is radar ready - additional components required)
(n/a with bimini top)
Includes chartplotter& HDFI fishfinder
VHF Radio - Ray 54

*Note: Items in Packages cannot be ordered individually unless listed as stand-alone.

COLOR OPTIONS

Hullside Color Option Upgrade
Fighting Lady Yellow
Hunter Green
Midnite Blue

Cabin Fabric Selection
Natural Bisque
Seashore
Tropical Breeze

ENGINE OPTIONS

Merc 200 Verado 4-stroke
Merc 225 Verado 4-stroke
Merc 250 Verado 4-stroke
Merc 275 Verado 4-stroke
Evinrude 200 E-Tec
Evinrude 200 E-Tec HO
Evinrude 225 E-Tec
Evinrude 250 E-Tec
Yamaha F 200 4-stroke
Yamaha F 225 4-stroke
Yamaha F 250 4-stroke

PERFORMANCE DATA - Yamaha F 200 4-stroke

Top Speed	40 MPH @ 6100 RPM
Cruise Speed	28.5 MPH @ 4500 RPM
Cruise Range	350 Miles

Performance and fuel consumption will vary and be affected by water and weather conditions, altitude, load and condition of boat, engine and propeller(s). Cruise range based on 95% of fuel capacity. All data is illustrative and is not warranted. This test done with clean bottom, no bottom paint and light to average load.

Specifications, options, and equipment are subject to change without notice.

Wellcraft®

252 FISHERMAN

L.0.A. w/pulpit	24’ 4” (7.42 m)
Beam	8’ 9” (2.66 m)
Dry weight (approx.)*	4680 lbs. (2123 kg)
Fuel capacity (Gas)	180 gal. (682 L)
Max hp power @ prop	450 HP (336 kw)
Shaft length: Single	30” (.76 m)
Twin	25” (.64 m)
Water capacity (option)	8 gal. (30 L)
Deadrise	20˚
Draft: up (approx)	16” (.41 m)
Draft: down (approx)	29.5” (.75 m)
Bridge clearance w/o top	6’ 8” (2.03 m)
Bridge clearance w/T-top (approx)	8’ 2” (2.49 m)

* Dry weight calculated does not include engine(s). Dry weight will vary with engine and options installed.

KEY SALES FEATURES

• Full height transom • Foam filled, fiberglass, box section stringer with integral high density composite transom
• Recessed stainless grab rails - port/stbd bow
• Full FRP cabin console liner with additional port/stbd below deck storage • Fish boxes (2) forward 180 qt. w/overboard drain arid sealed lids • Lighted baitwell 84 qt. with overboard drain
• Rod storage under gunwale port and starboard
• Stainless steel gunwale-mounted rod holders (4)
• Fiberglass cockpit with diamond pattern skid resistant surfaces
• All stainless steel deck hardware thru-bolted
• Complies with Coast Guard safety regulations
• 10-year structural hull warranty - transferable • NMMA Certified

STANDARD EQUIPMENT

HULL & DECK

Anchor rope locker w/hawse pipe
Anchor roller with cleat
Bow and stern eyes - stainless steel
Cleats (7) 8” stainless steel
Gunnel caps - port/stbd with integrated stainless steel side grab rails
Rod holders (4) stainless steel w/cap
Rub rail - heavy duty with stainless steel insert
Stainless steel rails
Swim platform - integrated with boarding ladder
Thru hulls - stainless steel
Transom full height with door
Windscreen - curved plexiglass

COCKPIT

Aft cockpit bolsters - port/stbd
Baitwell - 84 qt. w/light and overboard drain
Beverage holders (6)
Cockpit courtesy lights
Cockpit overboard scuppers - stainless steel
Cooler - 94 qt. removable
Entry light switch at transom
Fish boxes (2) 180 qt. - forward
with overboard drain and sealed lids
Fold away rear bench seat with cushion and aft bolster **(new)**
Hand holds recessed port/stbd stainless
Leaning post seat - convert from leaning to sitting with 2 rod holders, 2 cup holders and poly prep station
Raw water wash down
Rod storage under gunwale port/stbd
Skid resistant surfaces
Storage below forward deck - lockable
Storage for fire extinguisher - stbd
Tackle storage boxes (2) with removable trays (4)
T-top with (4) rod holders, outrigger plates, spreader light, and PFD storage **(new)**

MECHANICAL

Accessory plug - (1) 12V at helm
Baitwell pump 700 gph
Battery parallel with remote switch at helm
Battery switch - dual with 2 trays for single engine; 3 trays for twin engines
Bilge pump w/auto float switch, 1500 gph aft
Compass
Full instrumentation - digital **(new)**
Horn - flush mount
Hoses - steel reinforced
Ignition - safety interlock system with lanyard
Navigation lights
Powered buss bar & space at helm for electronics
**Propeller - stainless steel
Remote oil fill (2-stroke)
Steering - tilt hydraulic
Steering wheel - stainless steel with power knob
Submersible rated electrical connections
Switches - sealed
Trim Tabs

HEAD CONSOLE

Battery storage with tray(s) below deck
Dome light with switch - 12V
Full access to console rigging
Full fiberglass liner - skid resistant with integrated step
Head console lockable entry door - full size
Head - self contained (non-plumbed)
Port light opening with screen
Storage - outboard - below deck - port/stbd

**Drop shipped and factory rigged engines only.

OPTIONAL EQUIPMENT

Bow cushion port/stbd
Canada certification
CE certification (for export only)
Electronics box (for T-Top)
Engine cowling cover - Sunbrella™ with logo for Yamaha F200, F225 and F250 only (available through parts department only)
Forward console cooler seat (94 qt.) with seat back and bottom cushions
Head - Sealand Traveler - porcelain w/9 gal holding tank and dockside pumpout, pressurized fresh water system and transom shower
Heavy duty dive ladder
Outriggers - Taco Grand Slam - 15' poles **(new)**
Overboard discharge for SeaLand Traveler head
Pre-rig for Evinrude, Mercury and Yamaha (Recommended hp: 225 to 300 hp, check for engine availability)
Pressurized fresh water system with transom shower
Steering wheel aluminum with power knob
Tilt out storage bins mid cockpit - port/stbd
Trailer - Aluminum with brakes
Trailer - Galvanized with brakes
T-top canvas enclosure **(new)**

***Cockpit Bolster Package**
Midship bolsters - port/stbd
Forward bow bolsters port/stbd

***Sirius Satellite Radio System**
Clarion AM/FM CD player
Sirius satellite receiver, antenna
4 speakers

***Ray Marine C80 Electronics Package 8.4" Color Display**
(Unit is radar ready - additional components required)
Includes chartplotter& HDFI fishfinder
VHF Radio - Ray 54

*Note: Items in Packages cannot be ordered individually unless listed as stand-alone.

COLOR OPTIONS

Hullside Color Option Upgrade
Fighting Lady Yellow
Hunter Green
Midnite Blue

ENGINE OPTIONS

Sgl Merc 225 Verado 4-stroke
Sgl Merc 250 Verado 4-stroke
Sgl Merc 275 Verado 4-stroke
Sgl Evinrude 225 E-Tec
Sgl Evinrude 250 E-Tec
Tw Evinrude 150 E-Tec
Tw Evinrude 200 E-Tec
Tw Evinrude 200 E-Tec HO
Tw Evinrude 225 E-Tec
Sgl Yamaha F 250 4-stroke
Tw Yamaha F 150 4-stroke
Tw Yamaha F 200 4-stroke
Tw Yamaha F 225 4-stroke

PERFORMANCE DATA - TW F 150 YAMAHA

Top Speed	50.6 MPH @ 6000 RPM
Cruise Speed	35.4 MPH @ 4000 RPM
Cruise Range	344 Miles

Performance and fuel consumption will vary and be affected by water and weather conditions, altitude, load and condition of boat, engine and propeller(s). Cruise range based on 95% of fuel capacity. All data is illustrative and is not warranted. This test done with clean bottom, no bottom paint and light to average load.

Specifications, options, and equipment are subject to change without notice.

NOTES

Wellcraft®

252 COASTAL

L.O.A.	24’ 4” (7.42 m)
Beam	8’ 9” (2.66 m)
Dry weight (approx.)*	4360 lbs. (1978 kg)
Fuel capacity (Gas)	140 gal. (530 L)
Water capacity	9 gal. (34 L)
Max power @ prop	400 HP (298 kw)
Shaft length single	30” (.76 m)
Shaft length twin	25” (.64 m)
Dead rise	20°
Draft: up (approx.)	16” (.40 m)
Draft: down (approx.)	29.5” (.75 m)
Bridge clearance w/o top (approx.)	6’ (1 .83 m)
Bridge clearance w/bimini top (approx.)	8’ (2.43 m)
Bridge clearance w/hardtop (approx.)	8’ 2” (2.49 m)

* Dry weight calculated does not include engine(s). Dry weight will vary with engine and options installed.

KEY SALES FEATURES

• Full height transom • Foam-filled, fiberglass, box section stringer with integral high density composite transom
• Full fiberglass cabin liner with molded soft touch headliner
• Fishbox portside 128 qt. w/overboard drain
• Integrated cooler - stbd side - 44 qt. w/overboard drain
• Lighted baitwell 84 qt. with overboard drain
• Dry storage (92 qt.) under helm seat with room for safety gear • Rod storage under gunwale port and starboard
• Stainless steel gunwale - mounted rod holders (4)
• Fiberglass cockpit with diamond pattern skid resistant surfaces • All stainless steel deck hardware thru-bolted • Complies with Coast Guard safety regulations
• 10-year structural hull warranty - transferable
• NMMA Certified

STANDARD EQUIPMENT

HULL & DECK

Anchor rope locker w/hawse pipe
Anchor roller with cleat
Bow and stern eyes - stainless steel
Cleats (6) 8” stainless steel
Gunnel caps - with integrated stainless steel side grabrails
Integrated steps to forward deck - skid resistant
Rod holders (4) - stainless steel w/cap
Rub rail with stainless steel insert
Stainless steel rails
Swim platform - integrated
Swim ladder - flip down
Thru hulls - stainless steel
Transom full height with door
Windshield - curved tempered Solex® glass

COCKPIT

Baitwell - 84 qt. w/light and overboard drain
Beverage holders (5)
Cockpit bolsters - port/stbd **(new)**
Cockpit courtesy lights
Cockpit overboard scuppers
Cooler - 44 qt. integrated stbd side with overboard drain
Fishbox - 128 qt. portside with overboard drain
Fold away rear bench seat with cushion and aft bolster **(new)**
Hardtop molded with (4) rod holders, electronics flat, spreader light, and overhead incandescent lights **(new)**
Pedestal seats, adjustable with cushions port/stbd
Port/stbd jump seat cushions with backrest **(new)**
Skid resistant surfaces
Storage under helm seat 92 qt. (dry)
Tackle storage box with removable trays

MECHANICAL

Accessory plug - 12V at helm
Baitwell pump - 700 gph
Battery parallel with remote switch at helm
Battery switch - dual with 2 trays for single engine; 3 trays for twin engines
Bilge pumps with automatic float switches 500 gph forward; 1500 gph aft
Breakers - weather resistant
Compass
Full instrumentation - digital **(new)**
Horn - flush mount
Hoses - steel reinforced
Ignition - safety interlock system w/lanyard
Navigation lights
Powered buss bar & space at helm for electronics
**Propeller - stainless steel
Raw water washdown
Remote oil fill (2-stroke)
Steering - tilt hydraulic
Steering wheel - stainless steel w/power knob
Submersible rated electrical connections
Switches - sealed
Trim tabs
Windshield wipers - port/stbd **(new)**

CABIN

Battery storage with tray(s)
Bi-fold locking entry door
Deck hatch - oversized with screen
Dinette table w/filler cushion and dedicated storage
Galley with sink, storage bin, and pressurized fresh water
Head - self contained, covered
Molded soft touch headliner w/integrated features including overhead rod storage
Port lights - (2) opening w/screen
Rope locker access hatch
V-berth with cushions and storage

**Drop shipped and factory rigged engines only

OPTIONAL EQUIPMENT

Canada certification
CE Certification (for export only)
Cockpit/cabin carpet - snap in
Engine cowling cover - Sunbrella™ with logo for Yamaha F200, F225 and F250 only (available through parts department only)
Overboard discharge for Vacuflush head only
Pre-rig for Evinrude, Mercury and Yamaha (Recommended HP 225 to 300hp, check for engine availability)
Steering wheel - aluminum with power knob
Stove - butane (not available for CE boats)
Trailer - Aluminum with brakes
Trailer - Galvanized with brakes
220 Volt option (only applicable when Overnight Pkg. is selected)
Vacuflush head w/holding tank (10 gal) and dockside pumpout
Windlass with 150' rope/chain combo, electric up/down switches, lanyard and anchor

***Canvas Package for Hard Top**
Side and drop curtains with windshield connector **(new)**

***Dive Package**
Dive ladder - heavy duty - removable
Transom shower fresh water

***Sirius Satellite Radio System**
Clarion AM/FM CD player
Sirius Satellite Receiver and antenna
4 speakers
Digital remote control at helm

***Enclosed Hardtop Package (new)**
Fiberglass hardtop with 4 rod holders
Defroster
Full windshield with opening vents (replaces standard windshield)
Isinglass aft closure curtain
Overhead dome lights (2)
Spreader light

***Overnight Package (new)**
Air conditioner - 5,000 btu reverse cycle with heat
Battery charger
Power outlet - 110V in cabin
Shore power - 30 amp with 50' cord

***Ray Marine C80 Electronics Package 8.4" Color Display**
(Unit is radar ready - additional components required)
Includes chartplotter& HDFI fishfinder
VHF Radio - Ray 54

*Note: Items in Packages cannot be ordered individually unless listed as stand-alone.

COLOR OPTIONS

Hullside Color Option Upgrade
Fighting Lady Yellow
Hunter Green
Midnite Blue

Interior Fabric Selection
Natural Bisque
Seashore
Tropical Breeze

ENGINE OPTIONS

Sgl Merc 225 Verado 4-stroke
Sgl Merc 250 Verado 4-stroke
Sgl Merc 275 Verado 4-stroke
Sgl Evinrude 225 E-Tec
Sgl Evinrude 250 E-Tec
Tw Evinrude 150 E-Tec
Tw Evinrude 200 E-Tec
Tw Evinrude 200 E-Tec HO
Sgl Yamaha F 250 4-stroke
Tw Yamaha F 150 4-stroke
Tw Yamaha F 200 4-stroke

PERFORMANCE DATA - TW F150 YAMAHA 4-stroke

Top Speed	51.7 MPH @ 6000 RPM
Cruise Speed	34 MPH @ 4000 RPM
Cruise Range	353 Miles

Performance and fuel consumption will vary and be affected by water and weather conditions, altitude, load and condition of boat, engine and propeller(s). Cruise range based on 95% of fuel capacity. All data is illustrative and is not warranted. This test done with clean bottom, no bottom paint and light to average load.

Specifications, options, and equipment are subject to change without notice.

NOTES

Wellcraft®

290 COASTAL

L.O.A. w/pulpit	30’ 2” (9.19 m)
Hull length	27’ 10” (8.48 m)
Beam	10’ 5” (3.2 m)
Dry weight (approx.)*	8735 lbs. (3962 kg)
Fuel capacity (Gas)	225 gal. (871.2 L)
Water capacity	42 gal. (159 L)
Holding tank capacity	11 gal. (42 L)
Max power @ prop	600 HP (447.4 kw)
Shaft length	25” (.64 m)
Deadrise	18°
Draft: up (approx.)	22” (.56 m)
Draft: down (approx.)	33” (.84 m)
Bridge clearance w/o top (approx.)	7’ 3” (2.2 m)
Bridge clearance w/bimini top (approx.)	8’ 3” (2.51 m)
Bridge clearance w/hardtop (approx.)	9’ 0’ (2.74 m)
Sleeping capacity	6
Headroom	6’ 2” (1 .88 m)

* Dry weight calculated does not include engine(s). Dry weight will vary with engine and options installed.

KEY SALES FEATURES

• Full height transom with door • Modular port/stbd helm seating with storage • Cruiser style cabin amenities and functional for extended fishing trips • Kodiak Pro Flow 42 gal baitwell, light, over flow drain, clear plex bait lid and positive sealing latch • Three integrated steps on helm for easy access to forward deck • Integrated swim platform with boarding ladder • Stainless steel deck hardware - thru-bolted • Port/stbd settee converts to twin pilot berths • Helm provides plenty space for electronics • Insulated fish boxes with overboard pumpout • Complies with Coast Guard safety regulations • NMMA Yacht Certification • 10-year structural hull warranty - transferable

STANDARD EQUIPMENT

HULL & DECK
Anchor locker
Bow and stern eyes - stainless steel **(new)**
Bow pulpit with roller and anchor chute
Cleats - stainless steel
Deck hatch with screen
Hardtop FRP, with finished liner, spreader light, rod holders, full canvas enclosure
Heavy duty rub rail with stainless steel insert
Heavy duty dive ladder - removable
Port lights - opening with screens, stainless steel trim rings (4)
Rod holders - stainless steel, flush mount no cap (4)
Rod racks - under gunwale - port/stbd
Stainless steel rails
Stainless steel thru hulls
Swim platform - integrated
Transom - full height with transom door
Windshield - tempered glass - with walk-thru

COCKPIT
Aft seat - three person fold-out
Beverage holders (6)
Cockpit bolsters
Cockpit overboard scuppers
Courtesy lights
Entry light switch at transom
Fiberglass molded steps on helm (3) for easy access to foredeck
Fish boxes (2) - with lift assist and overboard pumpout
Helm seating module: flip up seat/bolster with positive latch, large dry storage with convenient side access door, beverage holders (4). Fire extinguisher storage, side coaming pad. Covered sink with pressurized fresh water (cold only), latching lid. Baitwell 42 gal Kodiak Pro Flow with clear bait lid and positive sealing latch, cutting board cover and knife/pliers holder
Port seating module: Wrap around lounge seating with coaming pad, hand holds stainless steel, 2 beverage holders and large dry storage below accessible through forward door; Three drawer tackle locker with additional storage bin; Aft facing large storage box with machinery space and access below. Gas spring lift assist on storage box lid
Raw water washdown

CABIN
AC/DC panel
Cabin door - lockable
Carpet - snap in
Decor pillows
Dinette table
Forward V-berth
Hanging locker
Liner - full fiberglass
Lighting - direct/indirect
Mid cabin
Settee - port/stbd converts to twin pilot berth
Stretched vinyl headliner
Woodgrain cabinets

Sirius Satellite Radio System
Clarion AM/FM CD player, Sirius Satellite receiver and antenna, 4 speakers, digital remote control at helm

GALLEY
Countertop - Granulon™ with storage below
Duplex outlet - GFI protected
Microwave oven
Overhead storage
Refrigerator - dual voltage, 110V w/15 amp converter - GFI protected
Sink with pressurized fresh water system
Stove - single burner alcohol/electric

HEAD
Duplex outlet - GFI protected
Full fiberglass head compartment w/ventilation
Hand held shower
Molded fiberglass sink and vanity with Granulon™ countertop and dry storage
SeaLand™ VacuFlush head with holding tank

MECHANICAL
Accessory plug - 12V
Battery switch - dual w/trays
Bilge pumps with auto float switches - forward 500 gph aft 1500 gph
Compass
Detector - carbon monoxide
Dockside water connection
Fuel filters/water separators
Horn
Hoses - steel reinforced
Ignition - safety interlock system with lanyard
Instrumentation - digital **(new)**
Navigation lights

STANDARD EQUIPMENT cont.

Oil tank storage with remote oil fill (2-stroke only)
Pressurized fresh water system with transom shower - hot/cold
*Propellers - stainless steel
Remote seacock actuators **(new)**
Shore power - 30 amp with (2) 50' shore power cords
Steering - tilt hydraulic
Steering wheel - stainless steel w/power knob
Trim Tabs
Water heater - 6 gal.
Windshield wipers (2)

*Drop shipped and factory rigged engines only

OPTIONAL EQUIPMENT

Air conditioner 7,000 BTU with heat
Auxiliary fuel tank (70 gal) (Generator cannot be ordered with this opt.)
Canada certification
Carpet - snap in cockpit
CE certification (for export only)
Cockpit cover for hardtop
Cradle
Dive tank storage racks
Engine cowling cover - Sunbrella™ with logo for Yamaha F225 and F250 only (available through parts department only)
Generator 5.0 kw gas with sound shield, insulated aft bulkhead and galvanic isolator with status monitoring (not available with auxiliary fuel tank)
Hardtop delete
LCD TV/DVD - includes TV/telephone inlet and antenna (not available with CE or 220 volt)
Outriggers - Taco Grand Slam - 15' poles **(new)**
Overboard discharge for head
Power assisted steering (available for Evinrude and Yamaha engines)
Pre-rig for Merc, Yamaha, and Evinrude (Recommended HP: Tw 225 hp to Tw 250 hp, check for engine availability)
Rod holders - gold tone (4) - aft transom mounted
Steering wheel - aluminum with power knob
220 volt option
Windshield wiper washer system
Windlass with 300' rope/chain combo and electric up/down switches, lanyard and anchor **(new)**

***Preferred Option Package**
TV/Telephone inlet with antenna
Remote spotlight

***Stereo Upgrade Package**
Cockpit subwoofer, power amp, 6 disc CD changer, 2 additional speakers, and cabin crossover amplifier

***Cockpit Seating Package**
Stbd baitwell and portside storage box cushions (removable)

***Ray Marine C80 Electronics Package (2) 8.4" Color Displays**
(Units are radar ready - additional components required)
Includes chartplotter, HDFI fishfinder, and high performance 1 KW in-hull transducer
VHF Radio - Ray 54

***Ray Marine E80 Electronics Package (2) 8.4" Color Displays**
(Units are radar ready - additional components required)
Includes chartplotter, HDFI fishfinder, and High Performance 1 KW in-hull transducer, SeaTalk networking and video/ instrumentation integration capabilities
VHF Radio - Ray 54

Ray Marine Auto Pilot - ST6001 S1G
(available with Yamaha and Bombardier engines only)

Ray Marine Radar - 4KW Radome

Ray Marine Radar - 4KW Open Array

*Note: Items in Packages cannot be ordered individually unless listed as stand-alone.

COLOR OPTIONS

Hullside Color Option Upgrade
Fighting Lady Yellow
Hunter Green
Midnite Blue

Interior Fabric Selection
Natural Bisque
Seashore
Tropical Breeze

ENGINE OPTIONS

Tw Merc 225 Verado 4-stroke
Tw Merc 250 Verado 4-stroke
Tw Merc 275 Verado 4-stroke
Tw Evinrude 225 E-Tec
Tw Evinrude 250 E-Tec
Tw Yamaha F 225 4-stroke
Tw Yamaha F 250 4-stroke

PERFORMANCE DATA - TW Merc250 Verado 4-stroke

Top Speed	50.4 MPH @ 6200 RPM
Cruise Speed	31.4 MPH @ 4000 RPM
Cruise Range	351 Miles

Performance and fuel consumption will vary and be affected by water and weather conditions, altitude, load and condition of boat, engine and propeller(s). Cruise range based on 95% of fuel capacity. All data is illustrative and is not warranted. This test done with clean bottom, no bottom paint and light to average load.

Specifications, options, and equipment are subject to change without notice.

NOTES

Wellcraft®

330 COASTAL

L.O.A. w/pulpit & platform	38’ 5” (11.71 m)
L.O.A. w/pulpit	36’ 4” (11.07 m)
Hull length	33’ 3” (10.13 m)
Beam	12’ 5” (3.78 m)
Dry weight (w/engine) (approx.)*	16000 lbs. (7257 kg)
Fuel capacity	370 gal. (1400 L)
Water capacity	52 gal. (196.8 L)
Holding tank capacity	20 gal. (75.7 L)
Max power @ prop	740 HP (552.04 kw)
Deadrise	16°
Draft: down (approx.)	36” (.91 m)
Bridge clearance (approx.)	9’ 9” (2.97 m)
Headroom	6’ 7” (2.01 m)
Sleeping Capacity	4

* Dry weight may vary with engine and options installed.

KEY SALES FEATURES

• Bait and tackle prep centers with fresh and salt water washdown
• Large windshield for visibility and weather protection
• Molded transom door for easy access for divers
• Stretched vinyl headliner
• 2 large flush mounted cockpit fish boxes with removable liners
• All stainless steel deck hardware thru-bolted
• Complies with Coast Guard safety regulations
• 5-year structural hull warranty - transferable
• Swim platform • Fiberglass encapsulated stringer system
• NMMA Yacht Certification • Cockpit liner - fiberglass - skid resistant for easy maintenance

STANDARD EQUIPMENT

HULL & DECK
Anchor locker
Bow pulpit - with integrated roller and deck pipe
Cleats - stainless steel
Deck hatch with screen
Hardtop with electronics box, spreader lights (2) and rod holders
Heavy duty rub rail with stainless steel insert
Hullside exhaust stainless
Port lights - opening with stainless steel trim rings
Rod holders - gunwale mount (4)
Rod racks - stainless steel with cap under gunwale - port/stbd
Stainless steel rails
Stainless steel thru hulls
Swim platform with 3 step boarding ladder
Transom - full height w/door
Upgraded engine room, sound dampening system and cabin insulation
Windshield - tempered glass w/aluminum frame

COCKPIT
Beverage holders
Cockpit coaming bolsters
Cockpit overboard scuppers
Courtesy lights
Fish boxes (2) - removable in cockpit sole
Footrest - port/stbd
Knife and pliers rack - cutting board
Livewell (116 qt.), circular with leader storage - stbd side
Raw water washdown
Seats - double helm and companion
Tackle center with storage and fresh water washdown - portside

CABIN
AC/DC panel
Cabin door - lockable
Carpet - snap in
Decor pillows
Dinette table - Granulon™ converts to berth (hi-lo)
Hanging locker
Lighting - direct/indirect
Liner - full fiberglass
Rod storage - vertical (4)
Sirius Satellite Radio System Clarion AM/FM CD player, Sirius Satellite receiver and antenna, 4 speakers, digital remote control
Storage lockers - under berths
V-berth cushions

GALLEY
Coffee maker (N/A with CE or 220 volt)
Counter top - Granulon™
Microwave oven
Refrigerator - dual voltage, 110 V, GFI protected
Sink with pressurized fresh water system
Stove - two burner electric

HEAD
Duplex outlet - GFI protected
Full fiberglass head compartment with vent
SeaLand™ VacuFlush - with holding tank
Shower - hand held with seat
Vanity - sink and storage - molded fiberglass

MECHANICAL
Accessory plug - 12V
Battery switch - dual
Bilge blower
Bilge pumps (4) with auto float switches and high water alarm - 1500 gph
Compass
Detector - carbon monoxide
Dockside water connection
Dripless shaft logs
Fire suppression system - automatic engine shutdown with manual over ride
Fuel filters - Racor™
Horn
Hoses - steel reinforced
Ignition - safety interlock system
Instrumentation with dimmer switch - electronic controls, tachometer, fuel, volts, water pressure, oil pressure, systems monitor
Navigation lights
Pressurized fresh water system
Props - Nibral
Prop shafts - heavy duty stainless steel
SeaKey™ - featuring telematics technology
Shore power 30 amp converter with 50 shore power cord
Steering - hydraulic
Steering wheel - aluminum with power knob
Trim tabs - hydraulic flush mount
Water heater - 6 gal. with exchanger
Windshield wipers (3)

OPTIONAL EQUIPMENT

CE certification (for export only)
Cockpit carpet - snap in
Cockpit cover
Cockpit sole reinforcement for fighting chair
Generator - diesel - 5 kw - includes galvanic isolator w/status monitoring
Hardtop delete
LCD TV/DVD with TV/telephone inlet and antenna (not available with CE or 220 volt)
Overboard discharge for VacuFlush head
Outriggers - 15' laydown for standard hardtop and optional second station tower
220 Volt option

***Preferred Option Package**
Aft seat
Air conditioner 16,000 BTU with heat
Remote spotlight
Side/drop curtain and windshield connector for hardtop
TV/Telephone inlet and antenna
Windlass with 350' rope/chain combo, electric up/down switches, lanyard and anchor **(new)**

***Second Station Tower Package**
Cup holders
Delete hardtop
Electronic control
-Compass
-Space for electronics
-Upper and lower station
-Upper console vinyl cover
-Vinyl buggy top

***Stereo Upgrade Package**
Cockpit subwoofer. power amp, 6 disc CD changer, 2 additional speakers, and cabin crossover amplifier

***Ray Marine C70 Electronics Package (2) 6.5" Color Displays**
(Units are radar ready - additional components required)
Includes chartplotter & HDFI fishfinder, and High Performance 1 KW in-hull transducer
VHF Radio - Ray 54

Ray Marine Auto Pilot - ST8001 S1G

Ray Marine Radar - 4KW Radome

Ray Marine Radar - 4KW Open Array

*Note: Items in Packages cannot be ordered individually unless listed as stand-alone.

ENGINE OPTIONS

Tw D-6 Volvo diesel

COLOR OPTIONS

Hullside Color Option Upgrade
Fighting Lady Yellow
Hunter Green
Midnite Blue

Interior Fabric Selection
Alabaster Rayan
Wisper Willow

PERFORMANCE DATA - Tw Volvo D-6

Top Speed	33.8 MPH @ 2900 RPM
Cruise Speed	29.3 MPH @ 2700 RPM
Cruise Range	309 Miles

Performance and fuel consumption will vary and be affected by water and weather conditions, altitude, load and condition of boat, engine and propeller(s). Cruise range based on 95% of fuel capacity. All data is illustrative and is not warranted. This test done with clean bottom, no bottom paint and light to average load.

Specifications, options, and equipment are subject to change without notice.

NOTES

Wellcraft®

360 COASTAL

L.O.A. with pulpit & platform	40’ 9” (12.30 m)
L.O.A. with pulpit	39’ 6” (12.04 m)
Hull length	36’ 6” (11.12 m)
Beam	13’ 8” (4.16 m)
Dry weight (with engine) (approx.)*	20000 lbs (9072 kg)
Fuel capacity (diesel)	400 gal. (1514 L)
Water capacity	107 gal. (405 L)
Holding tank capacity	18 gal. (68.14 L)
Max power @ prop	1080 hp (806.4 kw)
Draft	40” (1.02 m)
Deadrise	18°
Bridge clearance with hardtop (approx.)	10’ 6” (3.2 m)
Head Room	6’ 4” (1.93 m)
Sleeping capacity	5

* Dry weight may vary with engine and options.

KEY SALES FEATURES

• One piece fiberglass deck with cored construction • Large aft cockpit with plenty of rod storage • Large fish boxes • Hot/cold pressurized fresh water system • Engine room includes fresh water hose bibb and ladder for easy access • All stainless steel hardware thru bolted • Windshield dual wiper washer system • Hullside exhaust • Cruiser style amenities and functional for extended fishing trips • 16,000 BTU cabin air conditioning with heat - includes air condition vent installed at stbd helm cockpit • Transom multifunctional switch panel includes entry light switch, baitwell and baitwell light switch, fishbox pumpout switch, raw water washdown switch, and engine hatch lift switch • Electronic remote battery switch with manual override • Port/stbd fuel fills • Cherry cabinets and hanging lockers • Countertops and backsplashes in head and galley are Corian® • Polished stainless steel galley sink under counter mount • Microwave, coffee maker, dual electric stove and refrigerator • Forward island v-berth with 6” inner spring mattress, fitted quilted comforter, throw pillows, privacy curtain, and storage below • AC and DC cabin lighting • Cabin rod storage in cabin sole and stbd rod cabinet above dinette • Port/stbd cabin hanging lockers - cedar lined with light • 10-year structural hull warranty - transferable • Complies with Coast Guard safety regulations • NMMA yacht certification

STANDARD EQUIPMENT

HULL & DECK

Anchor locker
Bow pulpit with integrated roll and deck pipe
Bow rail - stainless steel
Cleats - stainless steel (2) 12"; (4) 10"
Cockpit sole reinforcement for fighting chair
Custom engine intake - port/stbd
Deck hatches - (3) opening with screen
Engine service hatch
Engine room - molded fiberglass
Engine room sound dampening system and cabin insulation
Hardtop FRP includes, spreader lights (2), rod holders, and 2 overhead stereo speakers
Heavy duty rub rail with stainless steel insert
Hullside exhaust - stainless steel
Port lights opening with screen (2)
Rod holders (6)
Stainless steel rails
Stern hawse pipes (2)
Thru hull fittings - stainless/bronze
Transom door with top gate
Windlass with up/down switches
Windshield - welded aluminum with electric center vent section

COCKPIT

Air conditioning vent - stbd helm (generated from cabin)
Bait prep center with sink and rigging board and tackle storage (port)
Baitwell - 37 gal. Kodiak Pro Flow
Beverage holders
Chart storage
Cockpit coaming bolsters - port/stbd/aft
Cockpit overboard scuppers
Cockpit seating - adjustable stbd helm seat with built in foot rest; portside "L" shape lounge, storage below port/stbd seats
Courtesy lights
Entry light switch at transom
Fire extinguisher storage box
Fish boxes (2) - insulated with run/dry solids pumps
Freezer - (72 qt.) port side with overboard drain
Pre-wire for four 12V electric reels/down riggers
Pressurized fresh and raw water washdown system
Tackle storage cabinets

CABIN

110 V GFI protected electrical outlets - port/stbd
AC panel - custom with accent tube lighting
Accessory plug - 12V
Acrylic sliding door - locking
Air conditioning 16,000 btu, double pan, reverse cycle with heat
Cabin steps Cherry
DC panel - custom with navigation lights, bilge pump monitor, and accent tube lighting
Décor kit - fitted v-berth comforter and 3 throw pillows
Dinette area - stbd L-shape seat with Cherry hi-lo dinette table and filler cushion that converts to sleep 2, dinette backrest converts to single upper bunk
Forward island v-berth with 6" inner spring mattress - hinged to access storage below; two lower v-berth drawers
Hanging locker - port/stbd - cedar lined with light
Lights 12V/110V - overhead - recessed (sealed)
Liner - full fiberglass
Privacy curtains
Rod storage in cabin sole includes storage boxes (3)
Rod storage cabinet above dinette with door and accent lighting
Stereo speakers - (2)

GALLEY

110 V GFI protected electrical outlets
Cherry cabinetry with satin finish
Coffee maker (N/A with CE or 220 volt)
Countertop - Corian® - with backsplash
Microwave oven
Recessed overhead lighting (sealed)
Refrigerator with freezer - dual voltage - 110/12V
Stainless steel sink under counter mount; pressurized freshwater, hot/cold faucet
Storage drawers include upgraded slides
Stove - electric, ceramic top - dual burner

STANDARD EQUIPMENT cont.

HEAD

110V GFI protected electrical outlet
Automatic shower sump pump
Countertop - Corian® - with molded in sink and Corian® backsplash, hot/cold water faucet
Full length head door mirror
Port light - opening with screen
Recessed overhead lighting - 12V - sealed
Slider bar shower head system with separate mixer mounted on bulkhead - hot/cold water
Storage cabinets with mirrored doors
Vacuflush head system with 18 gal. holding tank, level monitor and dockside pumpout

MECHANICAL

Battery charger - 50 amp
Battery paralleling solenoid with switch at helm
Battery switches - heavy duty - remote actuated
Battery trays (5) - with 5 batteries
Bilge pumps with auto float switches; (2) 1500 gph aft; (1) 1500 gph mid; (1) 500 gph fwd
Circuit breaker protection
Compass
Detector - carbon monoxide
Dockside water connection
Dripless shaft logs
Electric engine hatch actuators (2)
Electronic controls
Engine blowers - port/stbd
*Engine alarm system
Engine room fire suppression system with automatic shut down controller for engines, generator and blower; and manual override
Engine room ladder
Engine room lights
Fresh water hose bibb in engine room
Fresh water cooled engines
Fuel filters with water separators
Fuel tank - aluminum with port/stbd fills
Full instrumentation - digital
Galvanic bonded electrical systems with Dynaplate® and zinc
Generator - 8kw with fresh water cooling and 1 battery
Horn - dual trumpet
Hoses - steel reinforced
Navigation lights
Propeller shafts - stainless steel
Propellers - bronze
Seacocks - fitted below water line
Seawater strainers
Shore power (2) - 30 amp with two 50' shore power cords
Sirius satellite radio system, Clarion AM/FM CD player, Sirius satellite receiver, antenna and 4 speakers and remote control at helm
Steering - hydraulic tilt
Steering wheel - aluminum with power knob
Submersible rated electrical connections
TV/Telephone inlet
Trim tabs - recessed - hydraulic
Water heater - 6 gal.
Water resistant switch panel with breakers
Windshield wiper/washer system (2 wipers)

**Engine alarm functionality varies by engine*

OPTIONAL EQUIPMENT

Aft facing cockpit seat - stbd
Air conditioning 7,000 btu reverse cycle with heat on bridge deck
Bottom paint - black antifoul
Bow thruster includes additional battery switch - remote actuated from helm, battery tray and battery, automatically charges from port engine
Cabin carpet - snap in
CE certification
Cockpit carpet - snap in
Cockpit pedestal seats - port/stbd (replaces std seating)
Dinette table upgrade - cherry wood with compass rose inlay
Emergency bilge suction - 1 engine
Fold away rear bench seat

OPTIONAL EQUIPMENT cont.

Full commission - includes bottom paint, water ready, launch at Sarasota Bay
Hardtop canvas enclosure includes windshield connector, side and drop curtain
Ice maker on bridge deck
LCD TV/DVD with antenna and dockside TV/Telephone cords (not available with CE or 220V)
Oil changer system, engines, transmissions and generator
Overboard discharge for Vacuflush head
Outriggers
Remote spotlight - hardtop mounted
SeaKey™ - featuring telematics technology**
Swim platform with boarding ladder
Trolling valves (available for Cummins engines)
220 Volt option
Upgrade Teak cabin floor

***JL Audio Stereo Upgrade**
(replaces standard speakers)
6 channel 450W full range amplifier, 1 cockpit; 1 cabin
10” 150W subwoofer, 1 cockpit; 1 cabin
7.7” component speaker system with 1” dome tweeters - 4 cabin, 4 hardtop and 2 aft cockpit

***Ray Marine E120 Electronics Package (2) 12.1” Color Displays**
(Units are radar ready - additional components required)
Includes chartplotter, HDFI fishfinder, High Performance 1 KW in-hull transducer, SeaTalk networking, and Video/Instrumentation integration capabilities
Ray Marine Auto Pilot - ST8001 S1G
Ray Marine Radar - 4KW Open Array
VHF Radio - Ray 240 Modular System

* Note: Items in Packages cannot be ordered individually unless listed as stand-alone.

**SeaKey™ standard with Volvo D-6 engines; optional with Cummins engine

COLOR OPTIONS

INTERIOR FABRIC SELECTION
Alabaster Rayan
Wisper Willow

ENGINE OPTIONS

Cummins 540 Diesel
Volvo D-6 (370 hp) Diesel

PERFORMANCE DATA - TW Volvo D-6 370 HP

Top Speed	34.1 MPH @ 3500 RPM
Cruise Speed	31.4 MPH @ 3200 RPM
Cruise Range	394 Miles

Performance and fuel consumption will vary and be affected by water and weather conditions, altitude, load and condition of boat, engine and propeller(s). Cruise range based on 95% of fuel capacity. All data is illustrative and is not warranted. This test done with clean bottom, no bottom paint and light to average load.

Specifications, options, and equipment are subject to change without notice.

NEW FOR 2007

Wellcraft®

30 SCARAB TOURNAMENT

L.O.A.	30’ 2” (9.19 m)
Beam	9’ 2” (2.79 m)
Dry weight (approx.)*	6635 lbs. (3010 kg)
Fuel capacity (Gas)	288 gal. (1090 L)
Max power @ prop	600 HP (447 kw)
Shaft length: Twin	25” (.64 m)
Water capacity	13 gal. (49.21 L)
Deadrise	23°
Draft up (approx.)	23” (.58 m)
Draft down (approx.)	31” (.79 m)
Bridge clearance w/std T-top (approx.)	8’ 10” (2.73 m)

* Dry weight calculated does not include engine(s). Dry weight will vary with engine and options installed.

KEY SALES FEATURES

• Fishboxes - forward/aft and port/starboard
• Lockable storage under forward sole hatch
• Center console with head
• Tilt out storage bins - port/starboard
• Under gunwale rod storage • Rigging station at transom
• Pressurized fresh and raw water • Composite transom
• 10-year structural hull warranty - transferable
• NMMA Yacht Certification
• Complies with Coast Guard safety regulations
• FRP T-top with electronics box, rod holders, and PFD storage bags

STANDARD EQUIPMENT

HULL & DECK

Bow and stern eyes - stainless steel
Bow rail - split - aluminum
Cleats - pull up stainless steel (7)
Forward anchor/gear storage
Hand holds - stainless steel
Hardware - thru bolted - stainless steel
Heavy duty rub rail
Integrated swim platform
Rod holders (9) stainless steel - flush mount with cap
Rod racks - under gunnel - port/stbd
Stainless steel thru hulls
Transom door
Windshield - glass

COCKPIT

Aft baitwell - 84 qt. - with light
Beverage holders (5) - stainless steel
Cockpit overboard scuppers with screens
Cockpit coaming bolsters - port/stbd
Cooler - 50 qt. - integrated under forward console seat
Courtesy lights - LED
Fish boxes aft port/stbd (122 qt. ea.) - dedicated macerator overboard pumps
Fish boxes fwd port/stbd (62 qt. ea.)- drain overboard
Fold-away rear bench seat cushion and aft bolster
Glovebox - lockable
Helm seat - stand up leaning post with removable 94 qt. cooler
Rigging station at transom with sink, raw water washdown and removable bin
T-top FRP with gold tone rod holders (8), spreader lights (2), electronics box and PFD storage bags
Tackle storage with 5 drawers and 2 trays
Tilt out storage bins (2)

HEAD COMPARTMENT

Console entry steps with storage drawers
Dome light with switch - 12V
Full fiberglass liner - skid resistant
Portside entry door
Port light - opening with screen
Removable curtain with storage and access to console rigging
Self contained head
Sink molded in with pressurized fresh water (cold)

MECHANICAL

Accessory plugs - (2) 12V
Aft bilge lighting
Battery switches at helm with voltage sensitive relays
Bilge pumps with automatic float switch (1) - 1500 gph aft, (1) 500 gph fwd
Compass
Electronics accessory buss at helm
Full instrumentation - digital
Horn - dual flush mount
Hoses - steel reinforced
Ignition safety lanyard
Navigation lights
Oil tanks with remote fills (2-stroke engines only)
Pressurized fresh water system with transom shower and aft sink
*Propellers - stainless steel
Sirius satellite radio system - AM/FM CD player, Sirius satellite receiver, antenna and 4 speakers
Steering - hydraulic tilt
Steering wheel - stainless steel with power knob
Submersible rated electrical connections
Trim tabs - heavy duty with indicators

*Drop shipped and factory rigged engines only

OPTIONAL EQUIPMENT

Baitstation with 40 gal. Kodiak baitwell, pullout drawers, and tackle storage (double drop out bolster seat with aft facing seat not available)
Battery charger - 30 amp - with shore power inlet and 50' cord
Bow table
CE certification (for export only)
Double drop out bolster seat with aft facing seat (not available with baitstation opt)
Engine cowling cover - Sunbrella™ canvas for F225/F250 Yamaha only (available through parts department only)
Forward bow cushions
Forward bow full filler/sunpad
Heavy duty dive ladder - removable
Heavy duty rub rail with stainless steel insert
Marine head with dockside pumpout
Outriggers - Taco Grand Slam - 15' poles
Overboard discharge for marine head
Power assisted steering (available for Evinrude and Yamaha engines)
Remote spotlight
Rod holders - additional 6 gunwale mount
Steering wheel - aluminum with power knob
T-top canvas enclosure
Trim tabs - 14 x 22 heavy duty offshore
220 Volt option (only applicable when battery charger option is selected)
Windlass - with electric up/down foot switches and 300' rope/chain combo, anchor roller, lanyard and anchor
Windshield wiper/washer system

***Ray Marine C120 Electronics Package**

(Units are radar ready - additional components required)
12.1" Color displays (2)
Includes chartplotter, HDFI fishfinder, and high performance 1 KW in-hull transducer
VHF Radio - Ray 54

***Ray Marine E120 Electronics Package**

(Units are radar ready - additional components required)
12.1" Color displays (2)
Includes chartplotter, HDFI fishfinder, High Performance 1 KW in-hull transducer, SeaTalk networking and video/ instrumentation integration capabilities
VHF Radio - Ray 54

***Ray Marine Auto Pilot - ST6001 S1G**

(Available for Yamaha and Bombardier engines only)

***Ray Marine Radar - 4KW Raydome**

***Ray Marine Radar - 4KW Open Array**

*Note: Items in Packages cannot be ordered individually unless listed as stand-alone.

COLOR OPTIONS

Hullside Color Options
Fighting Lady Yellow
Midnite Blue
Scarab Black

Boot Tape
Silver/Red
Silver/Black

ENGINE OPTIONS

Tw Merc 225 Verado 4-stroke
Tw Merc 250 Verado 4-stroke
Tw Merc 275 Verado 4-stroke
Tw Evinrude 225 E-Tec
Tw Evinrude 250 E-Tec
Tw Yamaha F 225 4-stroke
Tw Yamaha F 250 4-stroke
Tw Yamaha Z 300 HPDI

PERFORMANCE DATA - TW F250 Yamaha

Top Speed	54 MPH @ 5900 RPM
Cruise Speed	29 MPH @ 4000 RPM
Cruise Range	504 Miles

Performance and fuel consumption will vary and be affected by water and weather conditions, altitude, load and condition of boat, engine and propeller(s). Cruise range based on 95% of fuel capacity. All data is illustrative and is not warranted.

Specifications, options, and equipment are subject to change without notice.

NOTES

Wellcraft®

32 SCARAB TOURNAMENT

L.O.A.	31’ 1” (9.73 m)
Beam	9’ 2” (2.79 m)
Dry weight (approx.)*	7865 lbs (3568 kg)
Fuel capacity	281 gal. (1067.49 L)
Max power @ prop	600 hp (447 kw)
Shaft length: Twin	30” (.76 m)
Water capacity	8 gal. (30 L)
Deadrise	23°
Draft up (approx.)	23” (.58 m)
Draft down (approx.)	31” (.78 m)
Bridge clearance w/o T-top (approx.)	5’ 7” (1.73 m)
Bridge clearance w/T-top (approx.)	7’ 7” (2.33 m)

* Dry weight calculated does not include engine(s). Dry weight will vary with engine and options installed.

KEY SALES FEATURES

- Fully featured fish boat that delivers both fishability and performance
- Fish boxes (4) insulated with overboard pumpout and sealed lids
- Pressurized fresh and raw water system with quick disconnect
- Foam fiberglass encapsulated stringer system
- Composite transom
- Cockpit overboard scuppers with screens
- 10-year structural hull warranty - transferable
- NMMA Yacht Certification
- Complies with Coast Guard safety regulations

STANDARD EQUIPMENT

HULL & DECK

Bow eye - stainless steel
Center mount cleat
Cleats - pull up stainless steel (6)
Foam filled, fiberglass encapsulated stringer and composite transom
Forward anchor line storage
Hardware - thru bolted - stainless steel
Integrated swim platform
Heavy duty dive ladder - removable
Rails - stainless steel
Rod holders with cap flush mounted - 4
Rod racks - under gunnel
Stainless steel thru hulls
Stern eyes - stainless steel
Transom door
Windscreen - plexiglass

COCKPIT

Aft seat - fold down
Baitwell with light - (37 gal.)
Beverage holders
Cockpit overboard scuppers with screens
Cockpit coaming bolsters - port/stbd
Cockpit coaming bolsters - forward bow
Console forward seat with beverage holders and hand holds
Courtesy lights
Fish boxes - insulated with sealed lids and overboard pumpout (4)
Forward storage boxes (2) with overboard pumpout
Glove box
Hand holds - forward/mid/aft
Location at console for electronics
Rigging station includes sink and cutting board
Seat - stand up with rod holders (4) and 94 qt. cooler
T-top with canvas - SKA style with rod holders (8), spreader lights (2), radio box, hand holds and PFD storage

HEAD COMPARTMENT

12V lighting
Accessory plugs - 12V (2)
Port/stbd port lights opening w/screen
Self contained head
Sink with cold water faucet
Under sink storage
Vinyl lined

MECHANICAL

Accessory plugs - 12V (2)
Aft bilge lighting
Battery trays - heavy duty
Battery switches and parallel switch
Bilge pump with auto float switches (2) - 1500 gph
Compass - high speed
Horn - dual flush mount
Hoses - steel reinforced
Ignition safety lanyard
Instrumentation - digital **(new)**
Navigation lights
Oil tank storage with remote fills (2-stroke only)
Pressurized fresh and raw water management system with quick disconnect at transom
**Propellers - stainless steel
Sirius satellite radio system Clarion AM/FM CD player, Sirius satellite receiver and antenna, 4 speakers, digital remote control
Steering - hydraulic tilt
Steering wheel - stainless steel with power knob
Submersible rated electrical connections
Trim tabs - heavy duty dual ram with indicators

**Drop shipped and factory rigged engines only

OPTIONAL EQUIPMENT

Anchor roller, cleat, deck pipe and lanyard
Battery charger
CE certification
Engine cowling cover - Sunbrella™ with logo for Yamaha F225 and F250 only (available through parts department only)
Forward bow seat with filler cushion (fwd storage locker n/a)
Forward storage locker with cushion (fwd bow seat n/a)
Gunwale trim - heavy duty with stainless steel insert
Head-SeaLand™ Traveler - w/ 9 gallon holding tank and dockside pumpout
Overboard discharge for SeaLand™ Traveler head
Power assisted steering (available for Evinrude and Yamaha engines)
Stand up bolster seat with tackle storage, rod holders (4) and 72 qt. cooler
Steering wheel - aluminum with power knob
T-top delete
Trim tabs - heavy duty
200 Volt option (only applicable when battery charger option is selected)
Windlass - with electric up/down foot switches and 300' rope/chain combo, lanyard and anchor **(new)**

***32 CCF Sport Arch Package**

Sport Arch - white powder coated aluminum with white canvas
Cockpit rails - powdercoat white
Deluxe aft seat
Lean post seat - powdercoat white with additional cup holders, no rod holders
Upgraded stereo speaker system
Delete gunwale rod holders

***Pro Package**

Seat - double drop out bolster with 40 gal. baitwell

*Note: Items in Packages cannot be ordered individually unless listed as stand-alone.

COLOR OPTIONS

Hullside Color Options
Fighting Lady Yellow
Midnite Blue
Scarab Black

Boot Tape
Silver/Red
Silver/Black

ENGINE OPTIONS

Tw Merc 225 Verado 4-stroke
Tw Merc 250 Verado 4-stroke
Tw Merc 275 Verado 4-stroke
Tw Evinrude 225 E-Tec
Tw Evinrude 250 E-Tec
Tw Yamaha F 250 4-stroke
Tw Yamaha Z 300 HPDI

PERFORMANCE DATA - TW E250

Top Speed	53.6 MPH @ 5800 RPM
Cruise Speed	36 MPH @ 4000 RPM
Cruise Range	478 Miles

Performance and fuel consumption will vary and be affected by water and weather conditions, altitude, load and condition of boat, engine and propeller(s). Cruise range based on 95% of fuel capacity. All data is illustrative and is not warranted.

Specifications, options, and equipment are subject to change without notice.

Wellcraft®

35 SCARAB TOURNAMENT

L.0.A.		35’ 4” (10.76 m)
Beam		9’ 11” (3.02 m)
Dry weight (approx.)*		8600 lbs. (3901 kg)
Fuel capacity		400 gal. (1762 L)
Max power @ prop		900 HP (671 kw)
Shaft length: Twin		30” (.76 m)
Triple	(2-port/stbd)	25” (.64 m)
	(1-center)	30” (.76 m)
Water capacity		13 gal. (49.21 L)
Deadrise		23°
Draft up (approx.)		23” (.58 m)
Draft down (approx.)	(Twin)	33” (.84 m)
Draft down (approx.)	(Triple)	39” (.96 m)
Bridge clearance w/std T-top (approx.)		8’ 4” (2.54 m)
Bridge clearance w/option sport arch (approx.)		7’ 11” (2.41 m)

* Dry weight calculated does not include engine(s). Dry weight will vary with engine and options installed.

KEY SALES FEATURES

• Wider beam provides more seating and cockpit space
• Plenty of storage with 4 tilt-out storage bins • Forward casting platform • Large center console (6’2” head room) includes self contained head and sink with hand held shower
• Rigging station at transom with sink • Composite transom
• 10-year structural hull warranty - transferable
• Pressurized fresh and raw water washdown
• NMMA Yacht Certification
• Complies with Coast Guard safety regulations

STANDARD EQUIPMENT

HULL & DECK

Bow and stern eyes - stainless steel
Bow rail - split - stainless steel
Cleats - pull up stainless steel (7)
Forward anchor line storage
Hand holds - stainless steel
Hardware - thru bolted - stainless steel
Heavy duty rub rail
Integrated swim platform
Rails - stainless steel
Rod holders (4) stainless steel - flush mount with cap
Rod racks - under gunnel - port/stbd
Stainless steel thru hulls
Transom door
Windscreen

COCKPIT

Aft baitwell - 84 qt. - with light
Beverage holders (4)
Cockpit overboard scuppers with screens
Cockpit coaming bolsters - port/stbd
Cooler - 60 qt. - integrated under forward console seat
Courtesy lights
Fold-away rear bench seat and aft bolster
Forward casting platform
Forward fish boxes port/stbd - insulated with sealed lids - 248 qts. each
Glovebox - lockable
Lean post seat with removable 94 qt. cooler
Rigging station at transom with sink, raw water washdown and 2 removable bins
T-top FRP with gold tone rod holders (8), spreader lights (3), electronics box and PFD storage bag
Tackle storage with 4 drawers and 4 trays
Tilt out storage bins (4)

HEAD COMPARTMENT

Console entry steps
Dome light with switch - 12V
Full fiberglass liner - skid resistant
Hatch access to console rigging
Mirror
Portside entry door
Port light - opening with screen
Self contained head
Sink molded in with hand held shower - pressurized fresh water (cold)
Vanity storage with toilet paper holder

MECHANICAL

Accessory plugs - 12V (2)
Aft bilge lighting
Battery charger - 30 amp
Battery switches and parallel switch
Battery trays - heavy duty with stainless steel sliders
Bilge pumps with automatic float switch (1) - 1500 gph aft, (1) 500 gph fwd
Compass
Electronics accessory buss at helm
Full instrumentation - digital **(new)**
Horn - dual flush mount
Hoses - steel reinforced
Ignition safety lanyard
Navigation lights
Oil tank storage (2-stroke engines only)
Pressurized fresh water system with transom shower
**Propellers - stainless steel
Shore power - 30 amp converter with 50' shore power cord
Sirius satellite radio system - Clarion AM/FM CD player, Sirius satellite receiver, antenna, 4 speakers, and digital control at helm
Steering - hydraulic tilt, dual ram standard with triple engines
Steering wheel - stainless steel with power knob
Submersible rated electrical connections
Trim tabs - heavy duty with indicators

**Drop shipped and factory rigged engines only

OPTIONAL EQUIPMENT

Baitstation with 40 gal. Kodiak baitwell, pullout drawers, and tackle storage (double drop out bolster seat w/aft facing seat not available)
CE certification (for export only)
Double drop out bolster seat with aft facing seat (not available with baitstation opt)
Engine cowling cover - Sunbrella™ with logo for Yamaha F225 and F250 only (available through parts department only)
Forward bow cushions
Heavy duty dive ladder - removable
Heavy duty rub rail with stainless steel insert
High performance controls (available for Tw Evinrude and Yamaha engines)
Marine head with dockside pumpout
Outriggers - Taco Grand Slam - 15' poles **(new)** (not available with arch option)
Overboard discharge for marine head
Power assisted steering (Yamaha and Evinrude engines only)
Remote spotlight
Rod racks - transom mounted
Sport arch - powdercoat white with electronics box, rocket launchers, lights and powdercoat white console rails
Steering wheel - aluminum with power knob
T-top canvas enclosure - 3 sided
Trim tabs - heavy duty offshore
220 Volt option
Windlass - with electric up/down foot switches, 300' rope/chain combo, anchor roller, lanyard and anchor **(new)**

***Ray Marine C120 Electronics Package (2) 12.1" Color Displays**

(Units are radar ready - additional components required)
Includes chartplotter, HDFI fishfinder, and High Performance 1 KW in-hull transducer
VHF Radio - Ray 54

***Ray Marine E120 Electronics Package (2) 12.1" Color Displays**

(Units are radar ready - additional components required)
Includes chartplotter, HDFI fishfinder, High Performance 1 KW in-hull transducer, SeaTalk networking, and video/ instrumentation integration capabilities
VHF Radio - Ray 54

Ray Marine Auto Pilot - ST6001 S1G

(available with Yamaha and Bombardier engines only)

Ray Marine Radar - 4KW Radome

Ray Marine Radar - 4KW Open Array

*Note: Items in Packages cannot be ordered individually unless listed as stand-alone.

COLOR OPTIONS

Hullside Color Option Upgrade
Fighting Lady Yellow
Midnite Blue
Scarab Black

Boot Tape
Silver/Red
Silver/Black

ENGINE OPTIONS

Tw Yamaha F 250 4-stroke	Triple Merc 225 Verado 4-stroke
Tw Yamaha Z 300 HPDI	Triple Merc 250 Verado 4-stroke
Triple Yamaha F 250 4-stroke	Triple Merc 275 Verado 4-stroke
Triple Yamaha Z 300 HPDI	Tw Evinrude 225 E-Tec
Tw Merc 225 Verado 4-stroke	Tw Evinrude 250 E-Tec
Tw Merc 250 Verado 4-stroke	Triple Evinrude 225 E-Tec
Tw Merc 275 Verado 4-stroke	Triple Evinrude 250 E-Tec

Specifications, options, and equipment are subject to change without notice.

PERFORMANCE DATA - Triple Yamaha F250 4-stroke

Top Speed	58.3 MPH @ 5650 RPM
Cruise Speed	39.5 MPH @ 4000 RPM
Cruise Range	500 Miles

Performance and fuel consumption will vary and be affected by water and weather conditions, altitude, load and condition of boat, engine and propeller(s). Cruise range based on 95% of fuel capacity. All data is illustrative and is not warranted.

Specifications, options, and equipment are subject to change without notice.

NOTES

Wellcraft®

35 SCARAB SPORT

L.0.A.		35’ 4” (10.76 m)
Beam		9’ 11” (3.02 m)
Dry weight (approx.)*		8800 lbs. (3992 kg)
Fuel capacity		400 gal. (1762 L)
Max power @ prop		900 HP (671 kw)
Shaft length: Twin		30” (.76 m)
Triple	(2-port/stbd)	25” (.64 m)
	(1-center)	30” (.76 m)
Water capacity		13 gal. (49.21 L)
Deadrise		23°
Draft up (approx.)		23” (.58 m)
Draft down (approx.)	(Twin)	33” (.84 m)
Draft down (approx.)	(Triple)	39” (.96 m)
Bridge clearance w/optional T-top (approx.)		8’ 4” (2.54 m)
Bridge clearance w/std sport arch (approx.)		7’ 11” (2.41 m)

* Dry weight calculated does not include engine(s). Dry weight will vary with engine and options installed.

KEY SALES FEATURES

• Wider beam provides more seating and cockpit space • Plenty of rod storage • Rigging station at transom with sink • The transom layout designed to allow access to mechanical equipment • Full fiberglass liner with integrated storage • Foam fiberglass encapsulated stringer system • Amenities offer fishing excursions as well as extended family cruising • Wider console - portside step-down entry includes self-contained head, sink and access to console rigging • Pull out battery sliders allow best accessibility for battery maintenance • Composite transom • 10-year structural hull warranty - transferable • Pressurized fresh and raw water system • Hot water heater • NMMA Yacht Certification • Complies with Coast Guard safety regulations

STANDARD EQUIPMENT

HULL & DECK
Bow and stern eyes - stainless steel
Bow rail - aluminum - powdercoat white
Cleats - pull up stainless steel (7)
Forward anchor line storage
Hand holds - stainless steel
Hardware - thru bolted - stainless steel
Heavy duty rub rail
Integrated swim platform
Rod holders (4) stainless steel - flush mount with cap
Rod racks - under gunnel - port/stbd
Stainless steel thru hulls
Transom door
Windscreen with aluminum rail - powdercoat white

COCKPIT
Aft baitwell - 84 qt. - with light
Beverage holders (4)
Cockpit overboard scuppers with screens
Cockpit coaming bolsters - port/stbd
Cooler - 60 qt. - integrated under forward console seat
Courtesy lights
Fish box /storage box insulated with overboard drain and sealed lids - port/stbd
Fold-away rear bench seat and aft bolster
Glovebox - lockable
Lean post seat with removable 94 qt. cooler
Rigging station at transom with sink, raw water washdown and 2 removable bins
Seating - port/stbd lounge with storage
Sport arch powdercoat white with electronics box, rocket launchers and 2 speakers
Stove - butane - self contained - tilt out (not available for CE boats)
Tackle storage with 2 drawers and 2 trays
Tilt out storage bins (2)

CABIN
12 V lighting
Cabin entry bi-fold locking door
Deck hatch - opening with screen
Dinette table
Forward v-berth with filler cushion and storage below
Storage cabinet

HEAD CONSOLE
Console entry steps
Dome light with switch - 12V
Full fiberglass liner - skid resistant
Hatch access to console rigging
Mirror
Portside entry door
Port light - opening with screen
Self contained head
Sink molded in with hand held shower - hot/cold pressurized fresh water system
Vanity storage with toilet paper holder

MECHANICAL
Accessory plugs - 12V (2)
Aft bilge lighting
Battery charger - 30 amp
Battery switches and parallel switch
Battery trays - heavy duty with stainless steel sliders
Bilge pumps with automatic float switch (1) - 1500 gph aft, (1) 500 gph fwd
Compass
Electronics accessory buss at helm
Full instrumentation - digital **(new)**
Horn - dual flush mount
Hoses - steel reinforced
Ignition safety lanyard
Navigation lights
Oil tank storage (2-stroke engines only)
Pressurized fresh water system with transom shower
**Propellers - stainless steel
Shore power - 30 amp converter with 50' shore power cord
Sirius satellite radio system - Clarion AM/FM CD player, Sirius satellite receiver, antenna, 4 speakers, and digital control at helm
Steering - hydraulic tilt, dual ram standard with triple engines
Steering wheel - stainless steel with power knob
Submersible rated electrical connections
Trim tabs - heavy duty with indicators
Water heater - 6 gallon

**Drop shipped and factory rigged engines only

OPTIONAL EQUIPMENT

Air conditioning - 5000 BTU with additional 30 amp shore cord
Baitstation with 40 gal. Kodiak baitwell, pullout drawers, and tackle storage (double drop out bolster seat w/aft facing seat not available)
CE certification (for export only)
Double drop out bolster seat with aft facing seat (not available with baitstation opt)
Engine cowling cover - Sunbrella™ with logo for Yamaha F225 and F250 only (available through parts department only)
Generator - 5kw gas with galvanic isolator with status monitoring
Heavy duty dive ladder - removable
Heavy duty rub rail with stainless steel insert
High performance controls (available for Tw Evinude and Yamaha engines)
Marine head with dockside pumpout
Outriggers - Taco Grand Slam - 15' poles **(new)** (only available with T-top opt)
Overboard discharge for marine head
Power assisted steering (Yamaha and Evinrude engines only)
Remote spotlight
Rod rack - transom mounted
Steering wheel - aluminum with power knob
T-top FRP with aluminum frame, 8 gold tone rod holders, electronics box, outrigger plates, spreader lights (3) and PFD storage
T-top canvas enclosure - 3 sided
Trim tabs - heavy duty offshore
220 Volt option
Windlass - with electric up/down foot switches, 300' rope/chain combo, anchor roller, lanyard and anchor **(new)**

***Ray Marine C120 Electronics Package (2) 12.1" Color Displays**
(Units are radar ready - additional components required)
Includes chartplotter, HDFI fishfinder, and High Performance 1 KW in-hull transducer
VHF Radio - Ray 54

***Ray Marine E120 Electronics Package (2) 12.1" Color Displays**
(Units are radar ready - additional components required)
Includes chartplotter, HDFI fishfinder, High Performance 1 KW in-hull transducer, SeaTalk networking, and video/ instrumentation integration capabilities
VHF Radio - Ray 54

Ray Marine Auto Pilot - ST6001 S1G
(available with Yamaha and Bombardier engines only)

Ray Marine Radar - 4KW Radome

Ray Marine Radar - 4KW Open Array

*Note: Items in Packages cannot be ordered individually unless listed as stand-alone.

COLOR OPTIONS

Hullside Color Option Upgrade
Fighting Lady Yellow
Midnite Blue
Scarab Black

Boot Tap
Silver/Red
Silver/Black

ENGINE OPTIONS

Tw Yamaha F 250 4-stroke	Triple Merc 225 Verado 4-stroke
Tw Yamaha Z 300 HPDI	Triple Merc 250 Verado 4-stroke
Triple Yamaha F 250 4-stroke	Triple Merc 275 Verado 4-stroke
Triple Yamaha Z 300 HPDI	Tw Evinrude 225 E-Tec
Tw Merc 225 Verado 4-stroke	Tw Evinrude 250 E-Tec
Tw Merc 250 Verado 4-stroke	Triple Evinrude 225 E-Tec
Tw Merc 275 Verado 4-stroke	Triple Evinrude 250 E-Tec

Specifications, options, and equipment are subject to change without notice.

PERFORMANCE DATA - Triple Yamaha F250 4-stroke

Top Speed	55.9 MPH @ 5850 RPM
Cruise Speed	38.5 MPH @ 4000 RPM
Cruise Range	500 Miles

Performance and fuel consumption will vary and be affected by water and weather conditions, altitude, load and condition of boat, engine and propeller(s). Cruise range based on 95% of fuel capacity. All data is illustrative and is not warranted.

Specifications, options, and equipment are subject to change without notice.

NOTES

SPECIFICATIONS

180 FISHERMAN

	Standard	Metric
Length Overall	18’0”	5.48 m
Beam	8’	2.4 m
**Dry Weight (approx.)	2285 lb	1037 kg
Fuel Capacity	49 gal	185.5 l
Max Power @ prop	150 HP	111.9 kw
Deadrise	20°	20°
Draft: up (approx.)	15”	0.38 m
Draft: down (approx.)	32”	0.81 m
Transom Height	20”	
Bridge clearance		
without top*	4’5”	1.37 m
with bimini top*	6’7”	2.01 m

180 SPORTSMAN O/B

	Standard	Metric
Length Overall	18’0”	5.49 m
Beam	8’0”	2.4 m
**Dry Weight (approx.)	2085 lb	946 kg
Fuel Capacity	49 gal	185 l
Max. Power @ prop	150 HP	111.9 kw
Deadrise	20°	20°
Draft: up (approx.)	15”	0.38 m
Draft: down (approx.)	32”	0.81 m
Transom Height	20”	0.51 m
Bridge clearance		
without top*	4’6”	1.37 m
with bimini top*	6’7”	2.01 m

200 FISHERMAN

	Standard	Metric
Length Overall	20’4”	5.94 m
Beam	8’7”	2.6 m
**Dry Weight (approx.)	2615 lb	1186 kg
Fuel Capacity	77 gal	291.5 l
Max. Power @ prop	200 HP	149.2 kw
Deadrise	19°	19°
Draft: up (approx.)	15”	0.31 m
Draft: down (approx.)	33”	0.68 m
Transom Height	25”	0.64 m
Bridge clearance		
without top*	5’5”	1.34 m
with T-top*	7’11”	1.96 m
with bimini top*	7’6”	1.86 m

210 FISHERMAN

	Standard	Metric
Length Overall	21’10”	6.65 m
Hull Length	20’3”	6.17 m
Beam	8’1”	2.46 m
**Dry Weight (approx.)	2820 lb	1279 kg
Fuel Capacity	77 gal	1291 l
Max. Power @ prop	225 HP	167.8 kw
Deadrise	19°	19°
Draft: up (approx.)	15”	0.40 m
Draft: down (approx.)	31”	0.79 m
Transom Height	25”	0.64 m
Bridge clearance		
without top*	5’6”	1.67 m
with T-top*	8’4”	2.54 m
with bimini top*	7’10”	2.38 m

210 SPORTSMAN

	Standard	Metric
Length Overall	21’10”	6.65 m
Hull Length	20’3”	6.17 m
Beam	8’3”	2.51 m
**Dry Weight (approx.)	2820 lb	1279 kg
Fuel Capacity	77 gal	1291 l
Max. Power @ prop	225 HP	167.8 kw
Deadrise	19°	19°
Draft: up (approx.)	15”	0.40 m
Draft: down (approx.)	31”	0.79 m
Transom Height	25”	0.64 m
Bridge clearance		
without top*	4’9”	1.45 m
with bimini top*	6’9”	2.05 m

220 SPORTSMAN

	Standard	Metric
Length Overall	22’4”	6.81 m
Hull Length	20’8”	6.3 m
Beam	8’3”	2.5 m
**Dry Weight (approx.)	3215 lb	1458 kg
Fuel Capacity	100 gal	375 l
Max. Power @ prop	250 HP	186 kw
Deadrise	18°	18°
Draft: up (approx.)	15”	0.31 m
Draft: down (approx.)	33”	0.68 m
Transom Height	25”	0.64 m
Bridge clearance		
without top*	5’3”	1.6 m
with bimini top*	6’9”	2.05 m

*Dimensions are approximate with average load, antennas not included.
**Dry weights are calculated with standard equipment only and do not include engine(s). Dry weight will vary with engines and options installed.

SPECIFICATIONS

V21 CUDDY

	Standard	Metric
Length Overall	21’10”	6.65 m
Centerline Hull	20’3”	6.17 m
Beam	8’3”	2.51 m
**Dry Weight (approx.)	2960 lb	1343 kg
Fuel Capacity	77 gal	291.5 l
Max Power @ prop	225 HP	168 kw
Deadrise	19°	19°
Draft: up (approx.)	15”	0.38 m
Draft: down (approx.)	31”	0.79 m
Transom Height	25”	1.64 m
Bridge clearance		
without top*	4’9”	1.45 m
with bimini top*	6’9”	2.05 m

22 WALKAROUND I/O

	Standard	Metric
Length Overall (w/pulpit)	22’10”	6.96 m
Hull Length	21’2”	6.45 m
Beam	8’2”	2.45 m
**Dry Weight (approx.)	4600 lb	2087 kg
Fuel Capacity	99 gal	374.7 l
Max Power @ prop	300 HP	223.7 kw
Deadrise	18°	18°
Draft: down (approx.)	32”	0.81 m
Bridge clearance		
without top*	5’7”	1.70 m
with hardtop*	8’2”	2.5 m
with bimini top*	7’0”	2.13 m

22 WALKAROUND O/B

	Standard	Metric
Length Overall (w/pulpit)	22’10”	6.96 m
Hull Length	21’2”	6.45 m
Beam	8’2”	2.45 m
***Dry Weight (approx.)	3220 lb	1461 kg
Fuel Capacity	99 gal	374.7 l
Max Power @ prop	250 HP	186 kw
Deadrise	18°	18°
Draft: up (approx.)	18”	0.46 m
Draft: down (approx.)	32”	0.81 m
Transom Height	25”	0.64 m
Bridge clearance		
without top*	5’9”	1.80 m
with hardtop*	8’4”	2.54 m
with bimini top*	7’2”	2.18 m

24 WALKAROUND

	Standard	Metric
Length Overall (w/pulpit)	24’1”	7.34 m
Hull Length	22’3”	6.78 m
Beam	8’2”	2.45 m
**Dry Weight (approx.)	3620 lb	1642 kg
Fuel Capacity	99 gal	374.72 l
Water Capacity	9 gal	34.07 l
Holding Tank Capacity	12 gal	45.42 l
Max Power @ prop	250 HP	186.4 kw
Deadrise	21°	21°
Draft: up (approx.)	17”	0.43 m
Draft: down (approx.)	32”	0.81 m
Transom Height	25”	0.64 m
Bridge clearance		
without top*	6’0”	1.83 m
with hardtop*	7’8”	2.38 m
with bimini top*	6’11”	2.10 m

250 FISHERMAN O/B

	Standard	Metric
Length Overall (w/pulpit)	24’8”	7.52 m
Beam	8’6”	2.59 m
***Dry Weight (approx.)	5000 lb	2268 kg
Fuel Capacity	150 gal	567.7 l
Max Power @ prop	350 HP	261 kw
Water Capacity	8 gal	30.28 l
Deadrise	18°	18°
Draft: up (approx.)	21”	0.53 m
Draft: down (approx.)	34”	0.86 m
Transom Height		
twin	25”	0.64 m
single	30”	0.76 m
Bridge clearance		
without top*	6’1”	1.85 m
with bimini top*	7’0”	2.13 m
with T-top*	7’10”	2.39 m

*Dimension with average load, antennas not included.
**Dry weights may vary with engine and options.
***Dry weights are calculated with standard equipment only and do not include engine(s). Dry weight will vary with engines and options installed.

SPECIFICATIONS Cont.

252 FISHERMAN

	Standard	Metric
Length Overall (w/pulpit)	24'4"	7.42 m
Beam	8'9"	2.66 m
***Dry Weight (approx.)	4300 lb	1950 kg
Fuel Capacity (gas)	180 gal	682 l
Water Capacity (option)	8 gal	30 l
Max Power @ prop	300 HP	224 kw
Deadrise	20°	20°
Draft: up (approx.)	16"	0.40 m
Draft: down (approx.)	29.5"	0.75 m
Bridge clearance		
without top*	6'0"	1.83 m
with bimini top*	8'0"	2.43 m
with T-top*	7'10"	2.39 m

250 COASTAL O/B

	Standard	Metric
Length Overall (w/pulpit)	24'8"	7.52 m
Beam	8'4"	2.54 m
***Dry Weight (approx.)	4065 lb	1844 kg
Fuel Capacity	150 gal	567.7 l
Max Power @ prop	350 HP	261 kw
Water Capacity	8 gal	30.28 l
Deadrise	18°	18°
Draft: up (approx.)	21"	0.53 m
Draft: down (approx.)	34"	0.86 m
Transom Height		
twin	25"	.64 m
single	30"	.76 m
Bridge clearance		
without top*	6'0"	1.83 m
with bimini top*	7'0"	2.13 m
with hardtop*	7'10"	2.39 m

252 COASTAL O/B

	Standard	Metric
Length Overall (w/pulpit)	24'4"	7.42 m
Beam	8'9"	2.66 m
**Dry Weight (approx.)	4360 lb	1978 kg
Fuel Capacity	140 gal	530 l
Max power @ prop	300 HP	224 kw
Water Capacity	9 gal	3.1 l
Deadrise	20°	20°
Draft: up (approx.)	16"	0.40 m
Draft: down (approx.)	29.5"	0.75 m
Bridge clearance		
without top*	6'0"	1.83 m
with bimini top*	8'0"	2.43 m

270 COASTAL I/O

	Standard	Metric
Length Overall (w/pulpit)	28'1"	8.56 m
Hull Length	25'10"	7.87 m
Beam	9'9"	2.97 m
**Dry Weight (approx.)	7800 lb	3538 kg
Fuel Capacity Gas	188 gal	712 l
Diesel	140 gal	530 l
Water Capacity	27 gal	102 l
Holding Tank Capacity	11 gal	42 l
Max Power @ prop	500 HP	373 kw
Deadrise	21°	21°
Draft: up (approx.)	22"	0.56 m
Draft: down (approx.)	40"	1.02 m
Bridge clearance		
without top*	7'1"	2.16 m
with hardtop*	9'3"	2.82 m
with bimini top*	8'4"	2.54 m

270 COASTAL O/B

	Standard	Metric
Length Overall (w/pulpit)	28'1"	8.56 m
Hull Length	25'10"	7.87 m
Beam	9'9"	2.97 m
***Dry Weight (approx.)	6235 lb	2828 kg
Fuel Capacity	188 gal	712 l
Water Capacity	27 gal	102 l
Holding Tank Capacity	11 gal	42 l
Max Power @ prop	500 HP	373 kw
Deadrise	21°	21°
Draft: up (approx.)	19"	0.48 m
Draft: down (approx.)	34"	0.86 m
Transom Height	25"	0.64 m
Bridge clearance		
without top*	7'1"	2.16 m
with hardtop*	9'1"	2.77 m
with bimini top*	8'4"	2.54 m

*Dimension with average load, antennas not included.
**Dry weights may vary with engine and options.
***Dry weights are calculated with standard equipment only and do not include engine(s). Dry weight will vary with engines and options installed.

SPECIFICATIONS Cont.

290 COASTAL

	Standard	Metric
Length Overall (w/pulpit)	30’2”	9.19 m
Hull Length	27’10”	8.48 m
Beam	10’5”	3.2 m
***Dry Weight (approx.)	8735 lb	3962 kg
Fuel Capacity	225 gal	871.2 l
Water Capacity	41 gal	155 l
Holding Tank Capacity	11 gal	42 l
Max Power @ prop	600 HP	447 kw
Deadrise	18°	18°
Draft: up (approx.)	22”	0.56 m
Draft: down (approx.)	33”	0.84 m
Bridge clearance		
without top*	7’3”	2.2 m
with hardtop*	9’0”	2.74 m
with bimini top*	8’3”	2.51 m

29 CCF

	Standard	Metric
Length Overall	28’6”	8.69 m
Beam	8’10”	2.67 m
***Dry Weight (approx.)	6345 lb	2878 kg
Fuel Capacity	214 gal	810 l
Water Capacity	8 gal	30 l
Max Power @ prop	500 HP	373 kw
Deadrise	23°	23°
Draft: up (approx.)	21”	0.53 m
Draft: down (approx.)	29”	0.73 m
Transom Height Twin	30”	0.76 m
Bridge clearance		
without T-top*	5’10”	1.78 m
with T-top*	7’8”	2.34 m

32 CCF

	Standard	Metric
Length Overall	31’11”	9.73 m
Beam	9’2”	2.79 m
***Dry Weight (approx.)	7865 lb	3568 kg
Fuel Capacity	281 gal	1067.49 l
Water Capacity	8 gal	30 l
Max Power @ prop	500 HP	373 kw
Deadrise	23°	23°
Draft: up (approx.)	23”	0.58 m
Draft: down (approx.)	31”	0.78 m
Transom Height Twin	30”	0.76 m
Bridge clearance		
without T-top*	5’7”	1.73 m
with T-top*	7’7”	2.33 m

35 CCF

	Standard	Metric
Length Overall	34’10”	10.39 m
Beam	9’11”	3.35 m
**Dry Weight (approx.)	8525 lb	3867 kg
Fuel Capacity	300 gal	1136 l
Water Capacity	8 gal	30 l
Max Power		
Twin	500 HP	373 kw
Triple	750 HP	559 kw
Deadrise	23°	23°
Draft: up (approx.)	23”	0.58 m
Draft: down		
Twin (approx.)	33”	0.83 m
Triple (approx.)	39”	0.96 m
Transom Height Twin	30”	0.76 m
Triple	25” (port/stbd)	
	30” (center)	
Bridge clearance		
without T-top*	5’9”	1.76 m
with T-top*	7’9”	2.37 m

330 COASTAL

	Standard	Metric
Length Overall	38’5”	11.71 m
Hull Length	33’3”	10.13 m
Beam	12’5”	3.78 m
***Dry Weight (approx.)	16000 lb	7257 kg
Fuel Capacity (gas)(diesel)	370 gal	1400 l
Fresh Water Tank		
Capacity	52 gal	196.84 l
Holding Tank Capacity	20 gal	75.7 l
Max HP @ Prop		
Gas	740 HP	552 kw
Diesel	750 HP	559 kw
Deadrise	16°	16°
Draft: down (approx.)	36”	0.91 m
Bridge clearance*	9’9”	2.97 m

SAFETY LABEL LOCATIONS

HAZARD LABELS

You will see equipment safety labels at various locations on your boat. These labels have been placed on your boat to help ensure that the time you spend on your boat is safe and enjoyable. **Figures 3.19 thru 3.30** show the typical locations of these safety labels. Your boat may have more or fewer labels than those shown. They may also be in a slightly different location. Check with your dealer if you have any questions about safety labels or replacing labels if they are missing from your boat.

Be sure to read ALL hazard labels. Understanding the information on these labels is of vital importance.

*Dimension with average load, antennas not included.
**Dry weights may vary with engine and options.
***Dry weights are calculated with standard equipment only and do not include engine(s). Dry weight will vary with engines and options installed.

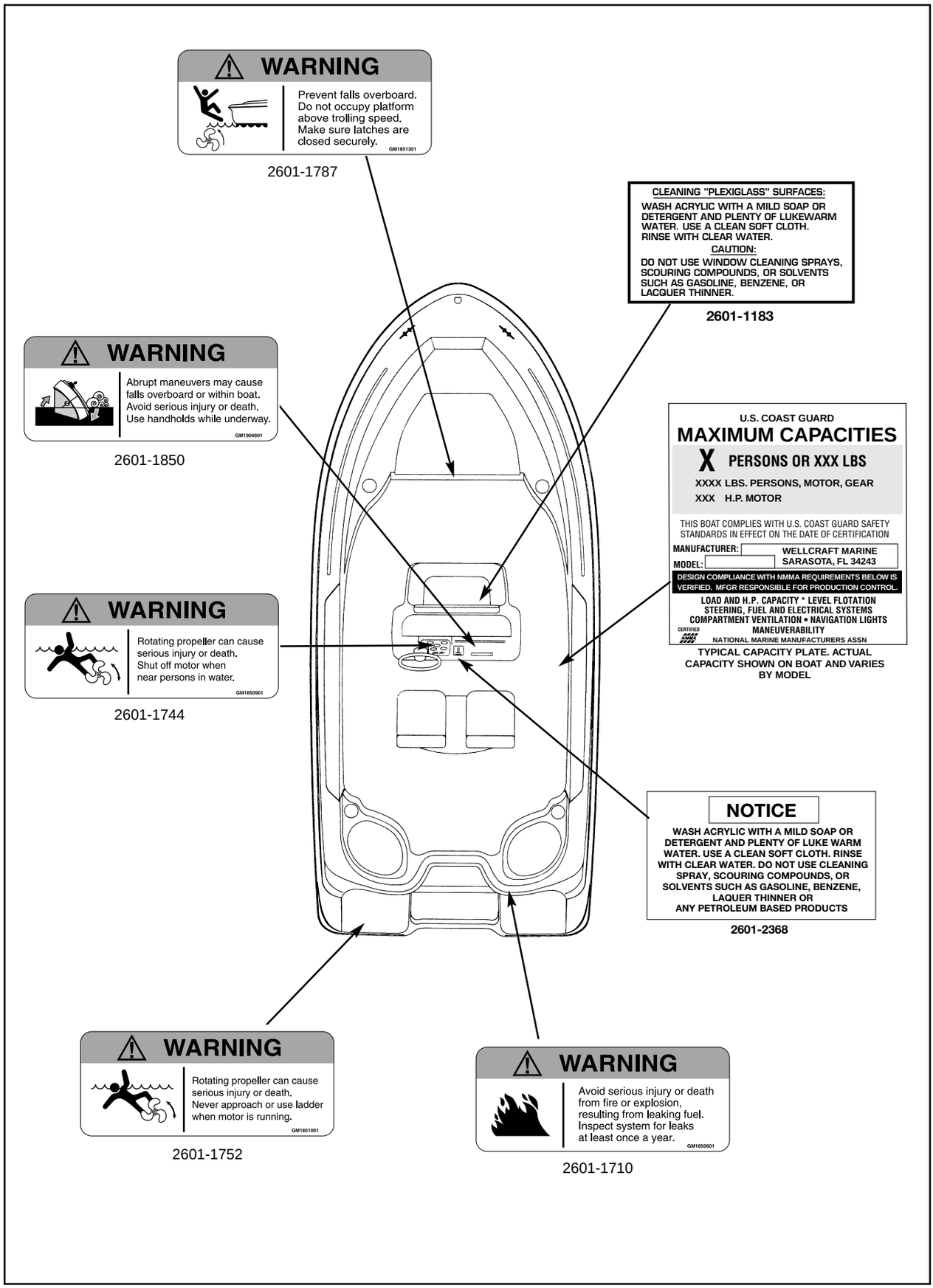

FIGURE 3.19 180 FISHERMAN

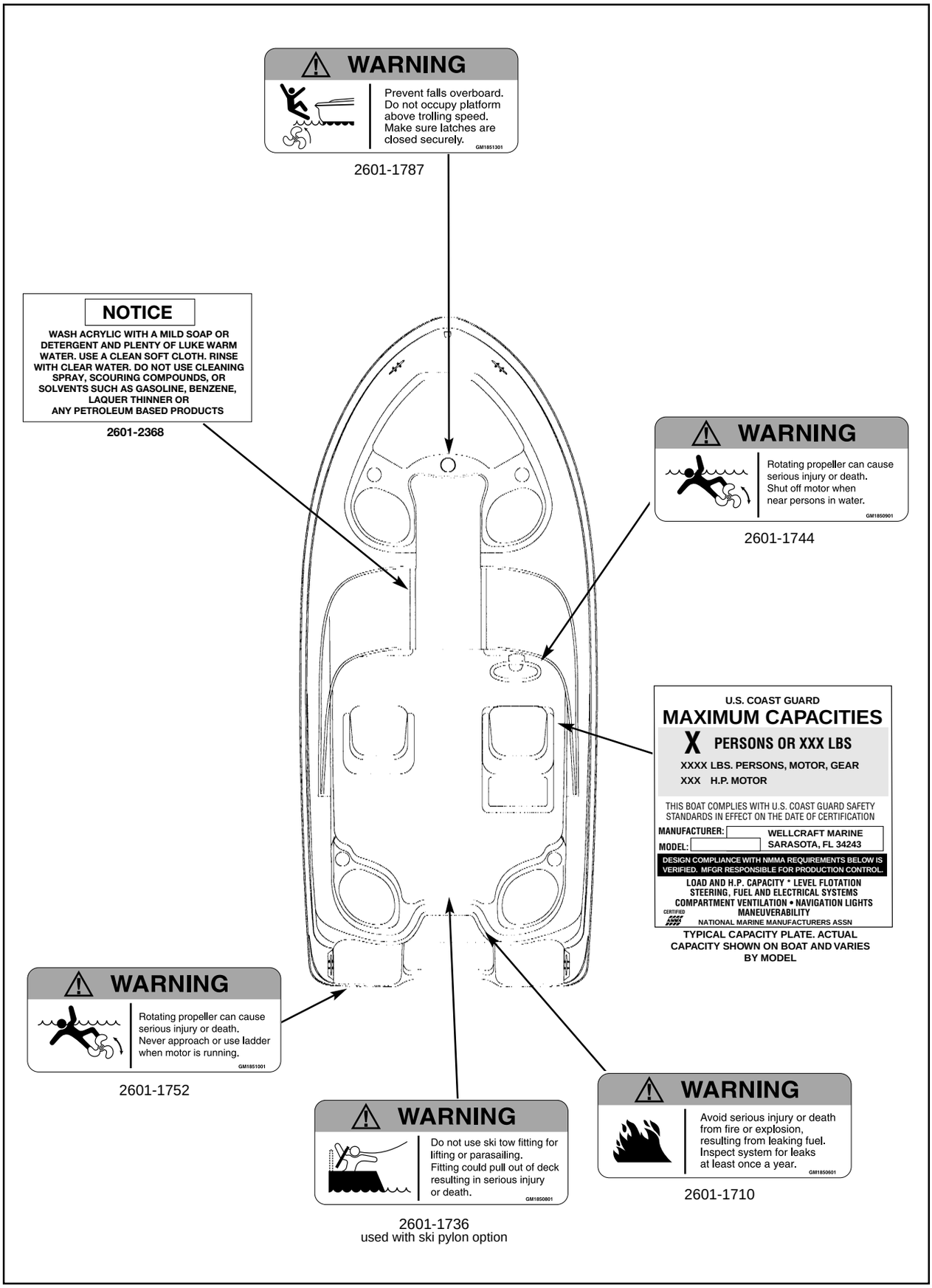

FIGURE 3.20 180 SPORTSMAN O/B

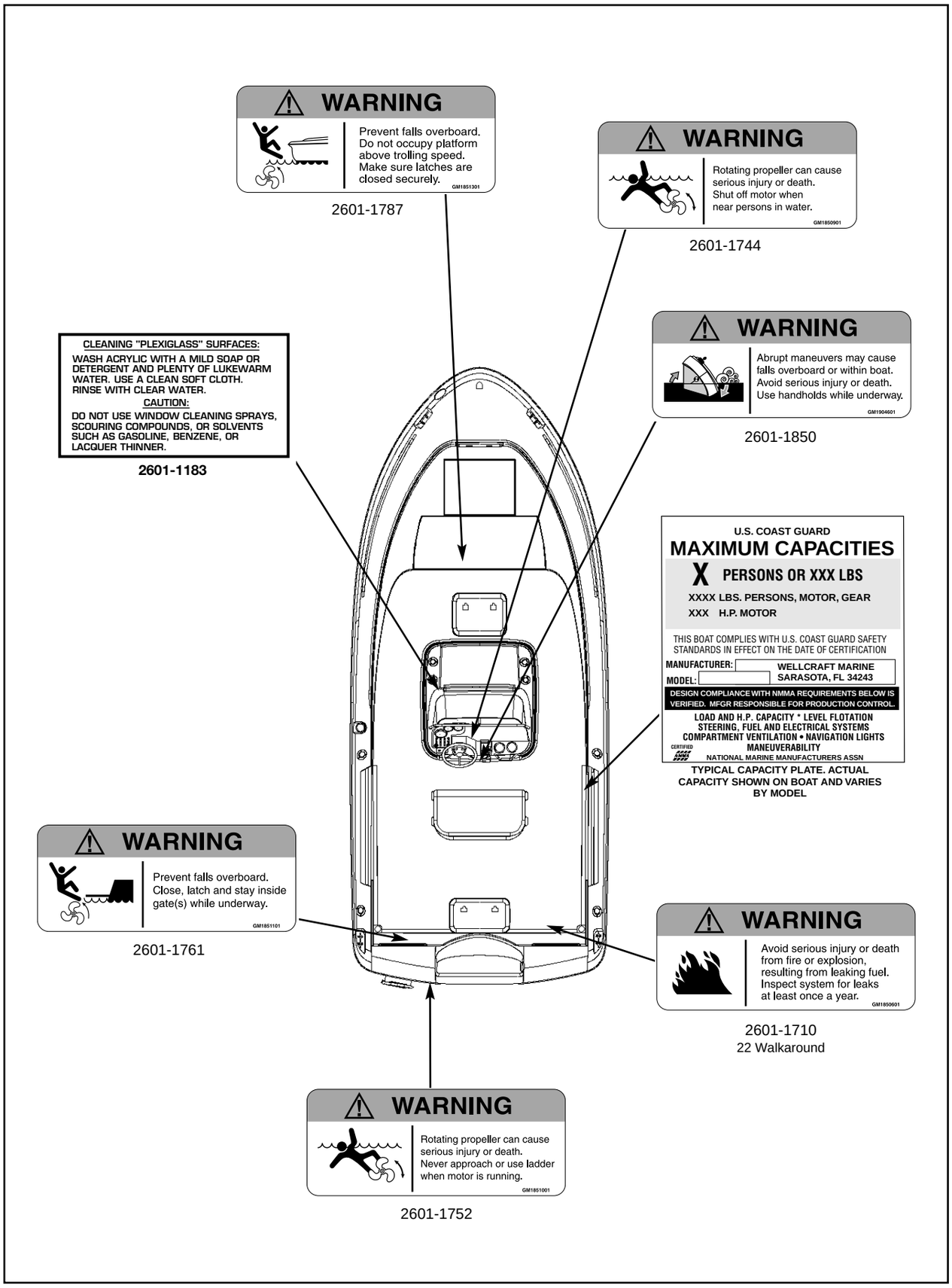

FIGURE 3.21 200 FISHERMAN

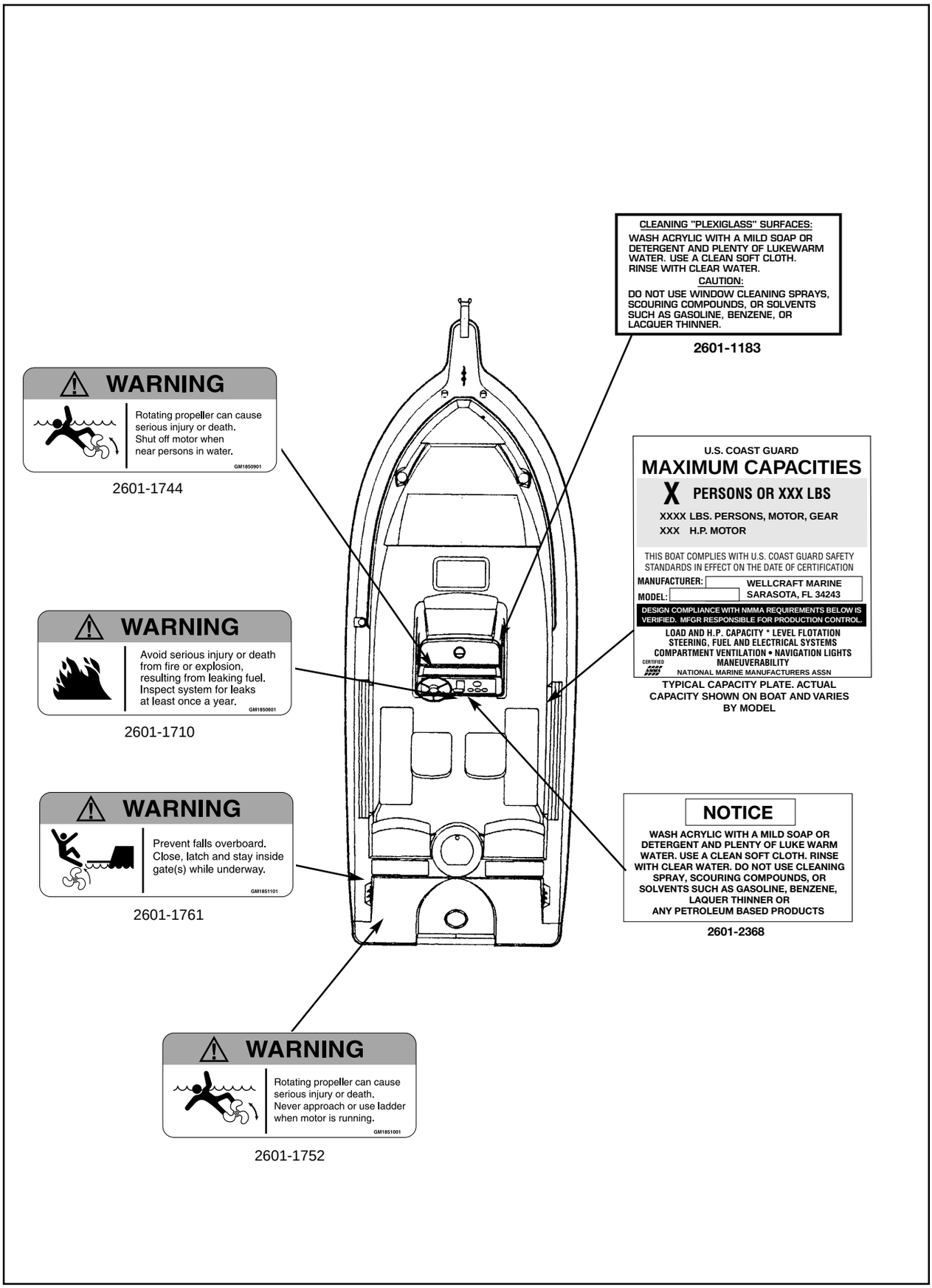

FIGURE 3.22 210 FISHERMAN

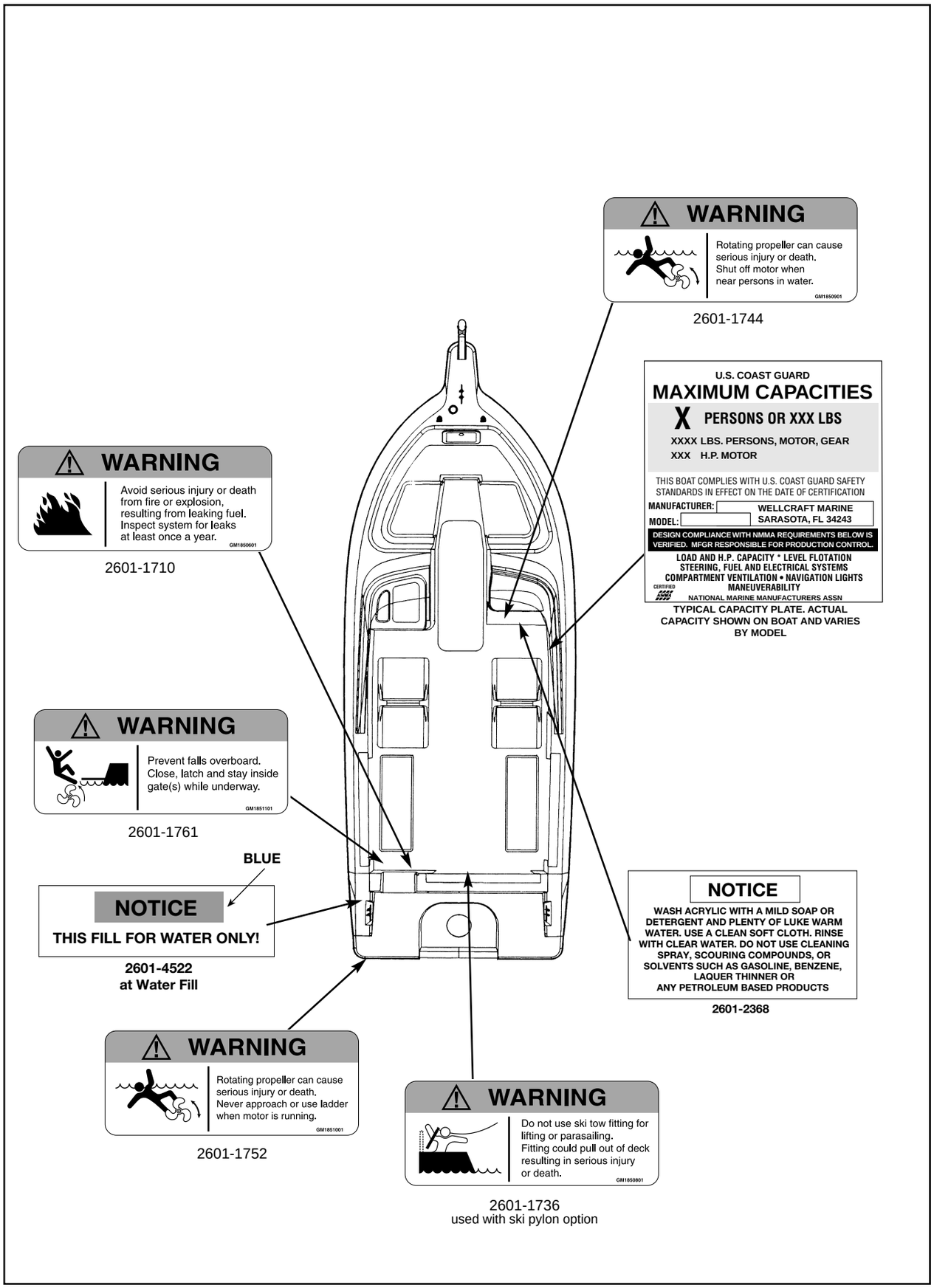

FIGURE 3.23 210 SPORTSMAN

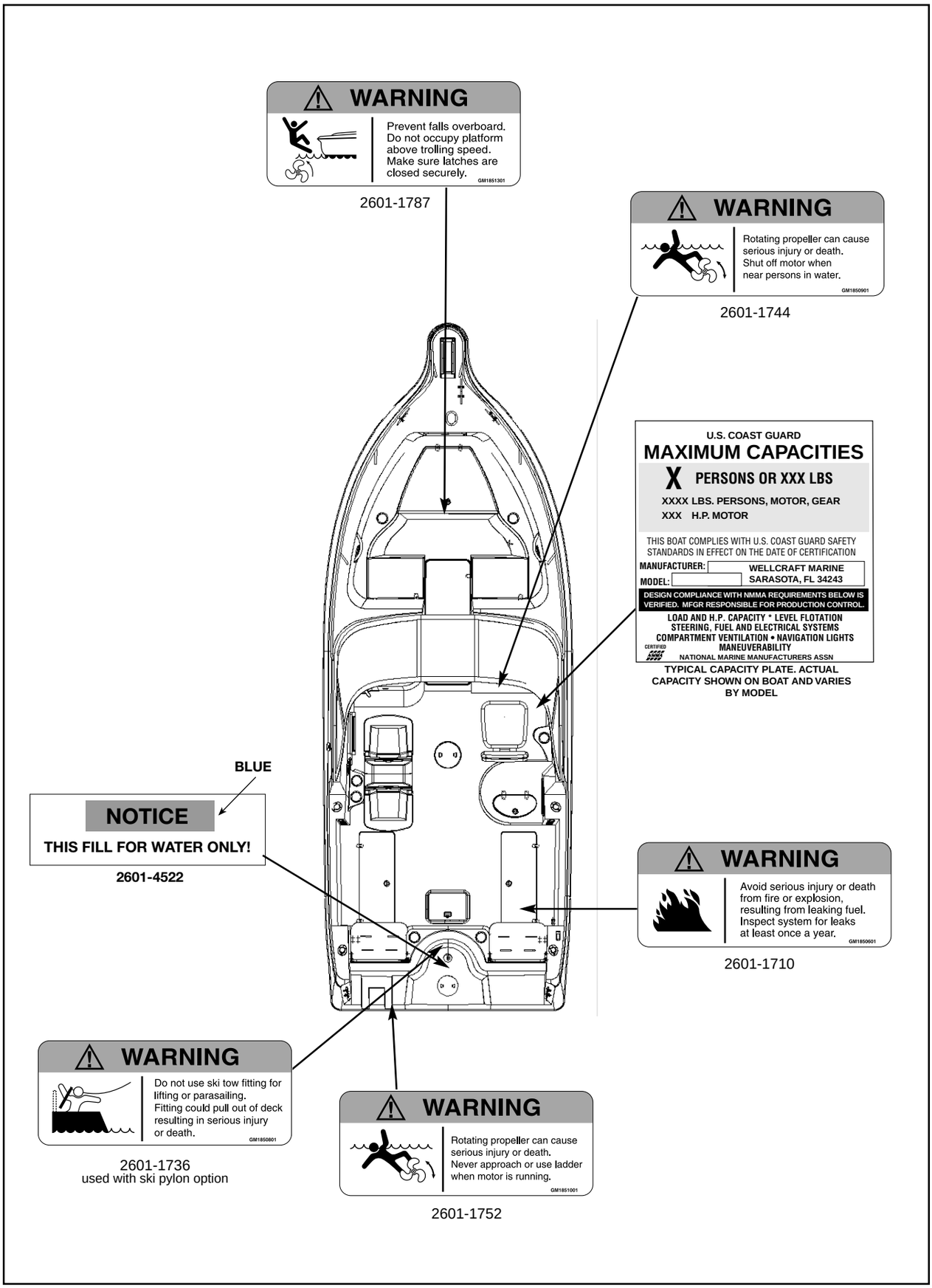

FIGURE 3.24 220 SPORTSMAN

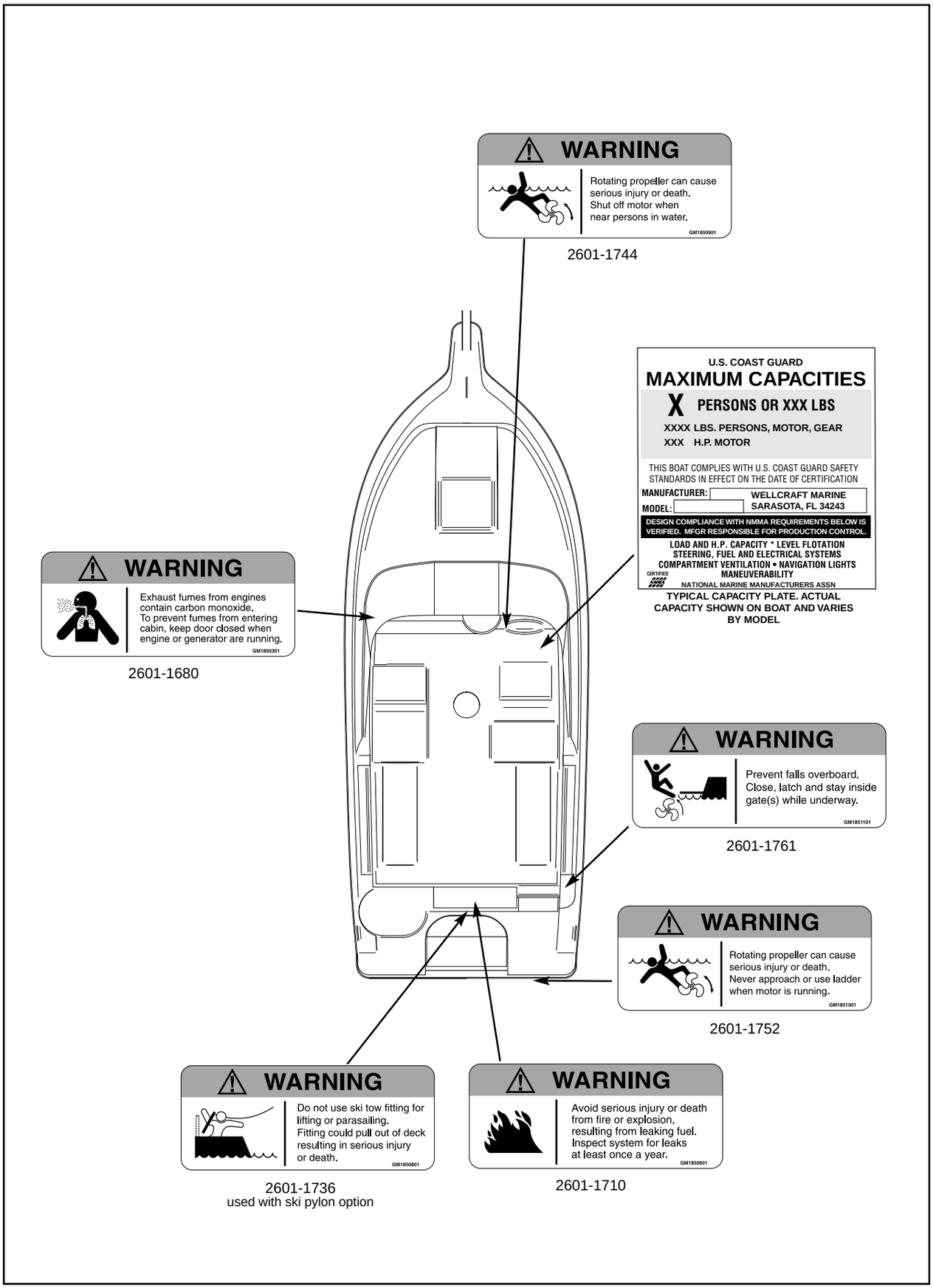

FIGURE 3.25 V21 CUDD Y

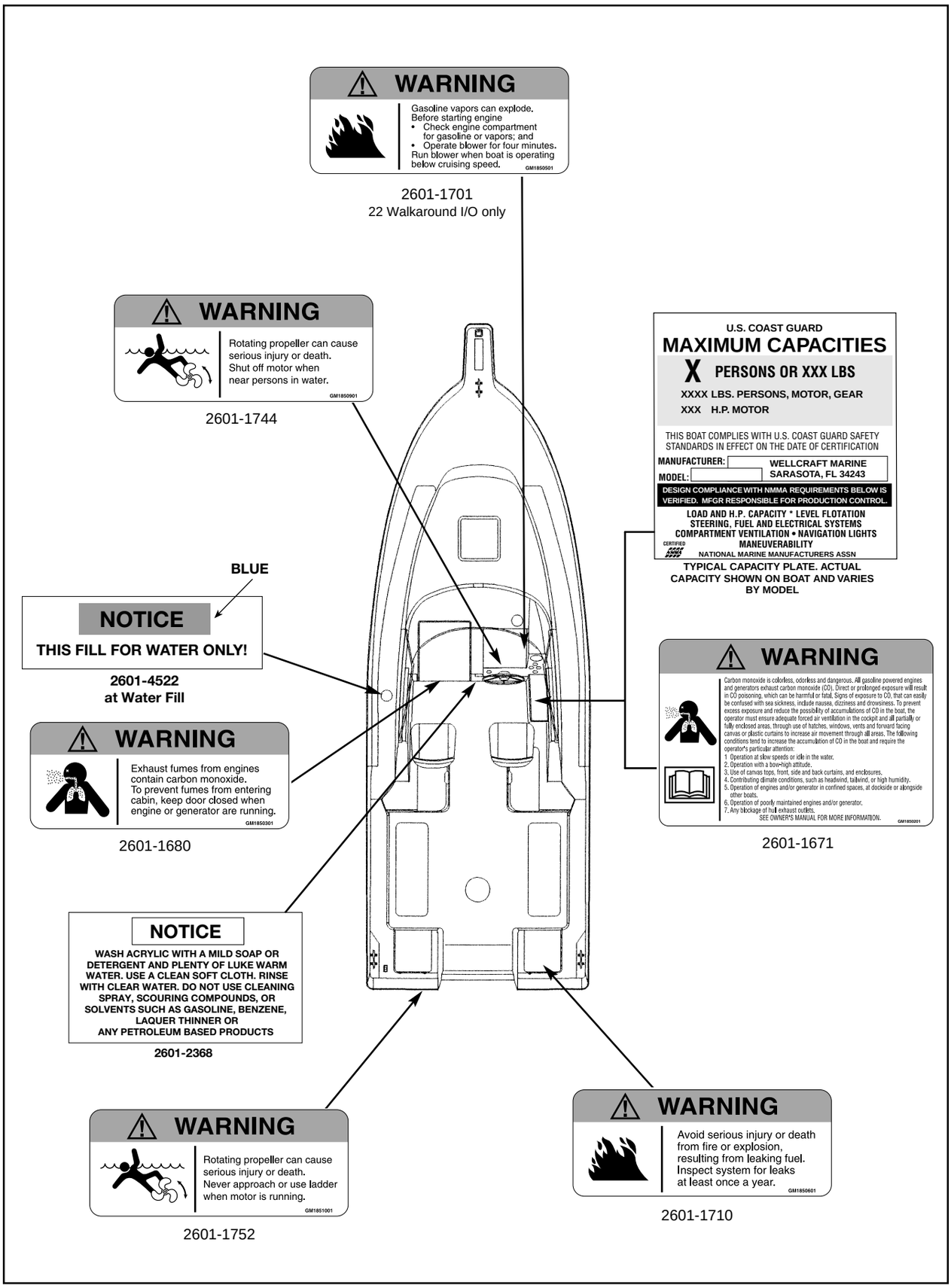

FIGURE 3.26 22 WALKAROUND I/O, 22 WALKAROUND O/B 24 WALKAROUND

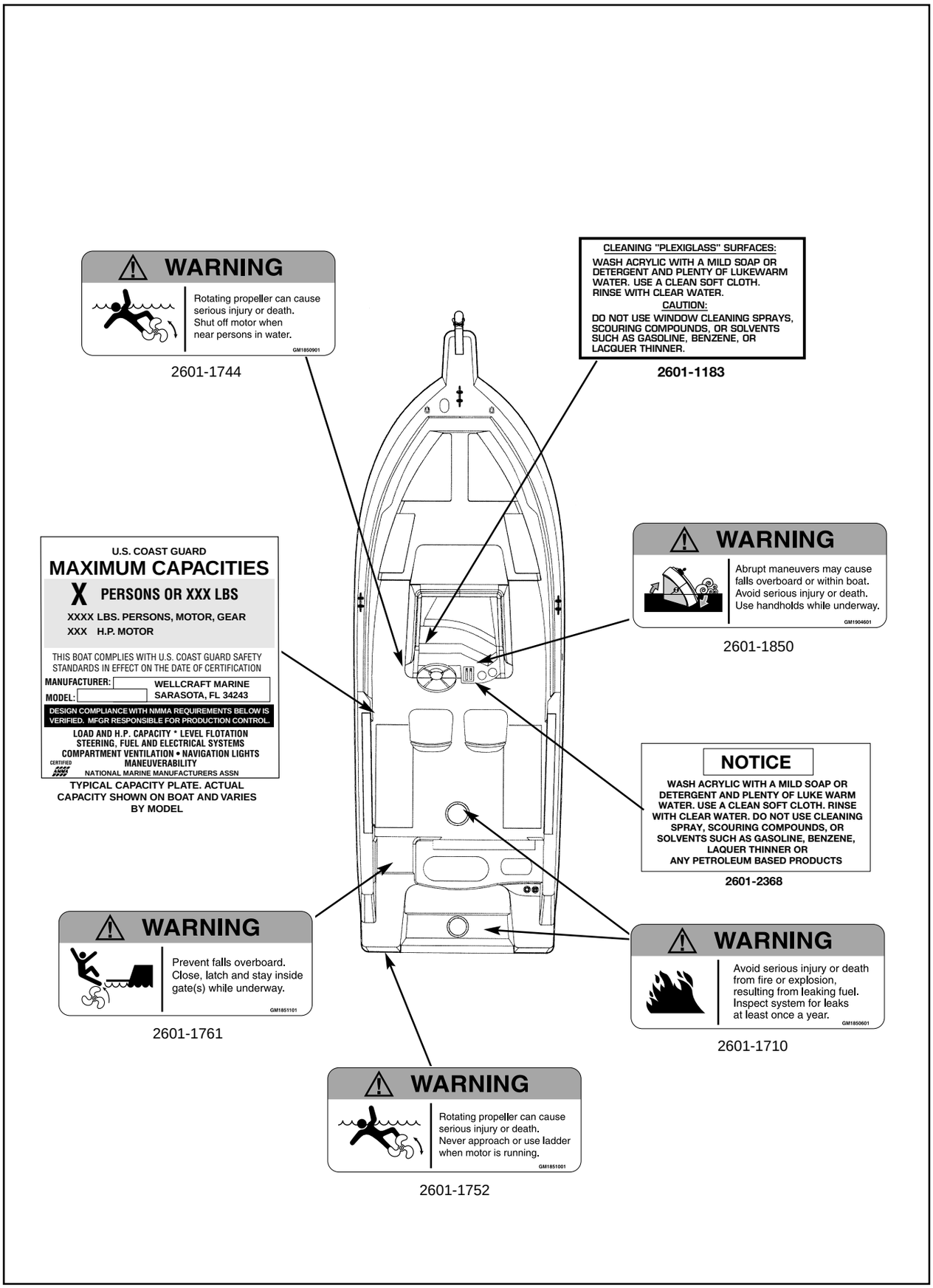

FIGURE 3.27 250 FISHERMAN O/B

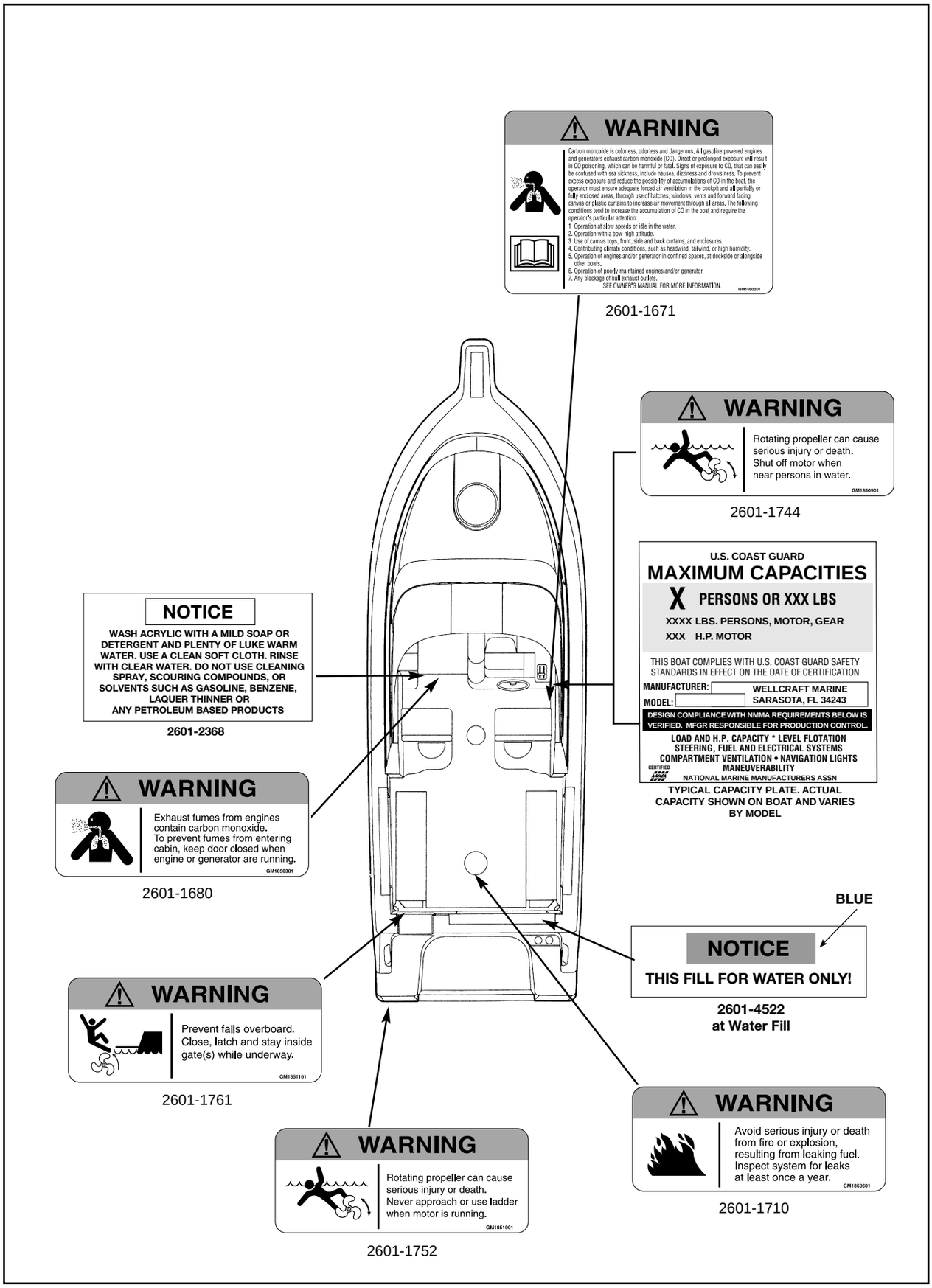

FIGURE 3.28 250 COAST AL O/B

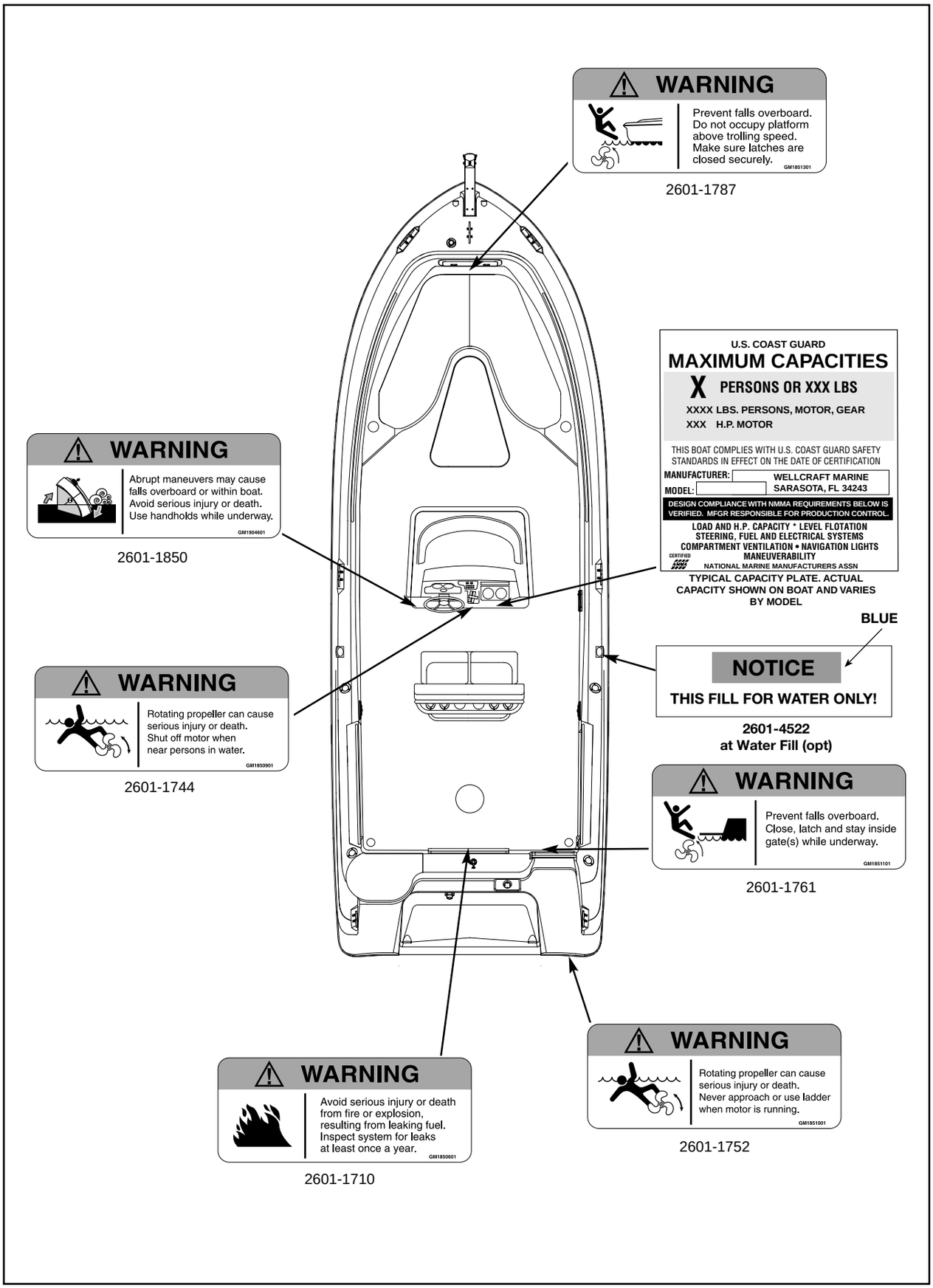

FIGURE 3.29 252 FISHERMAN O/B

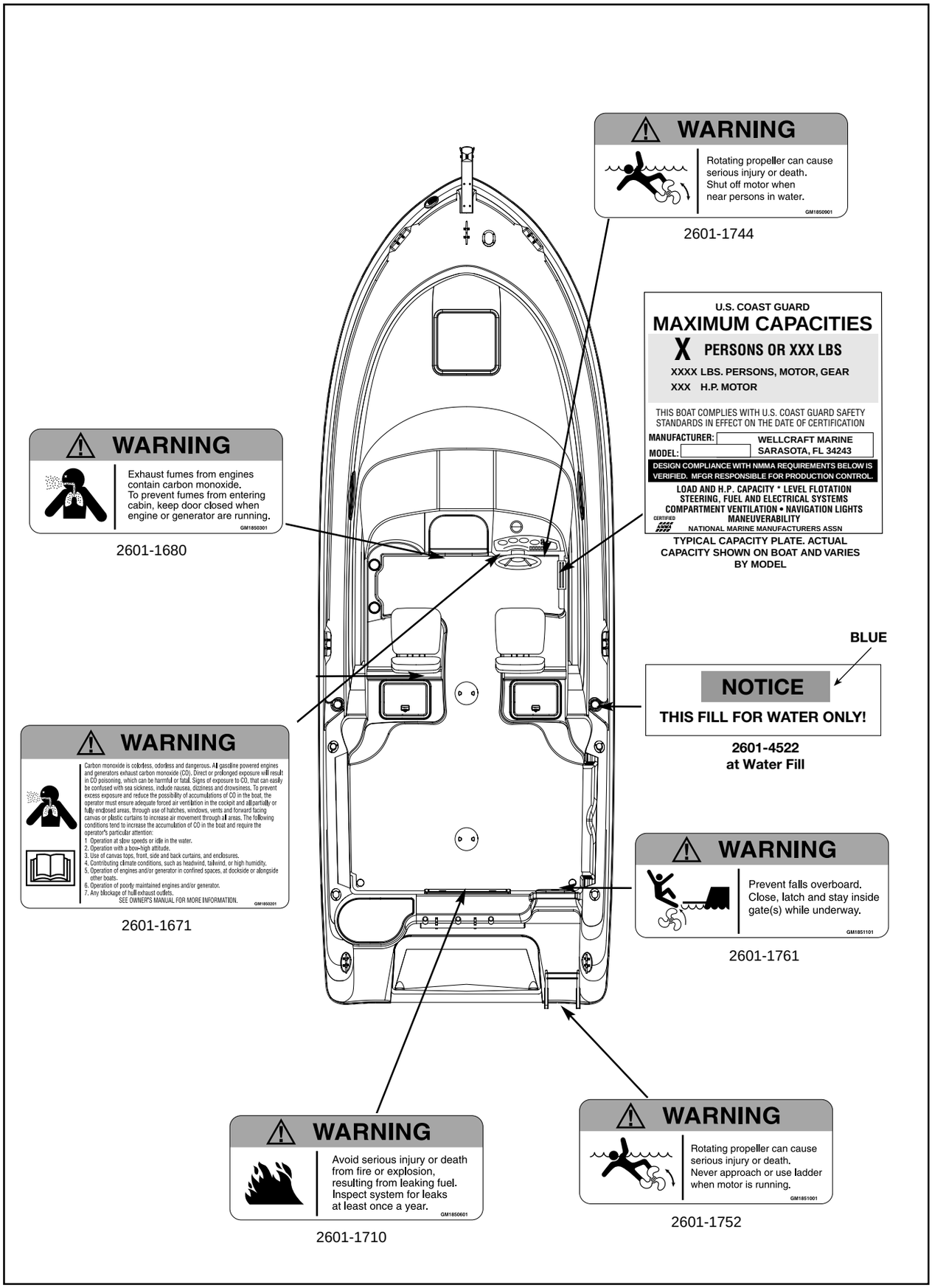

FIGURE 3.30 252 COAST AL O/B

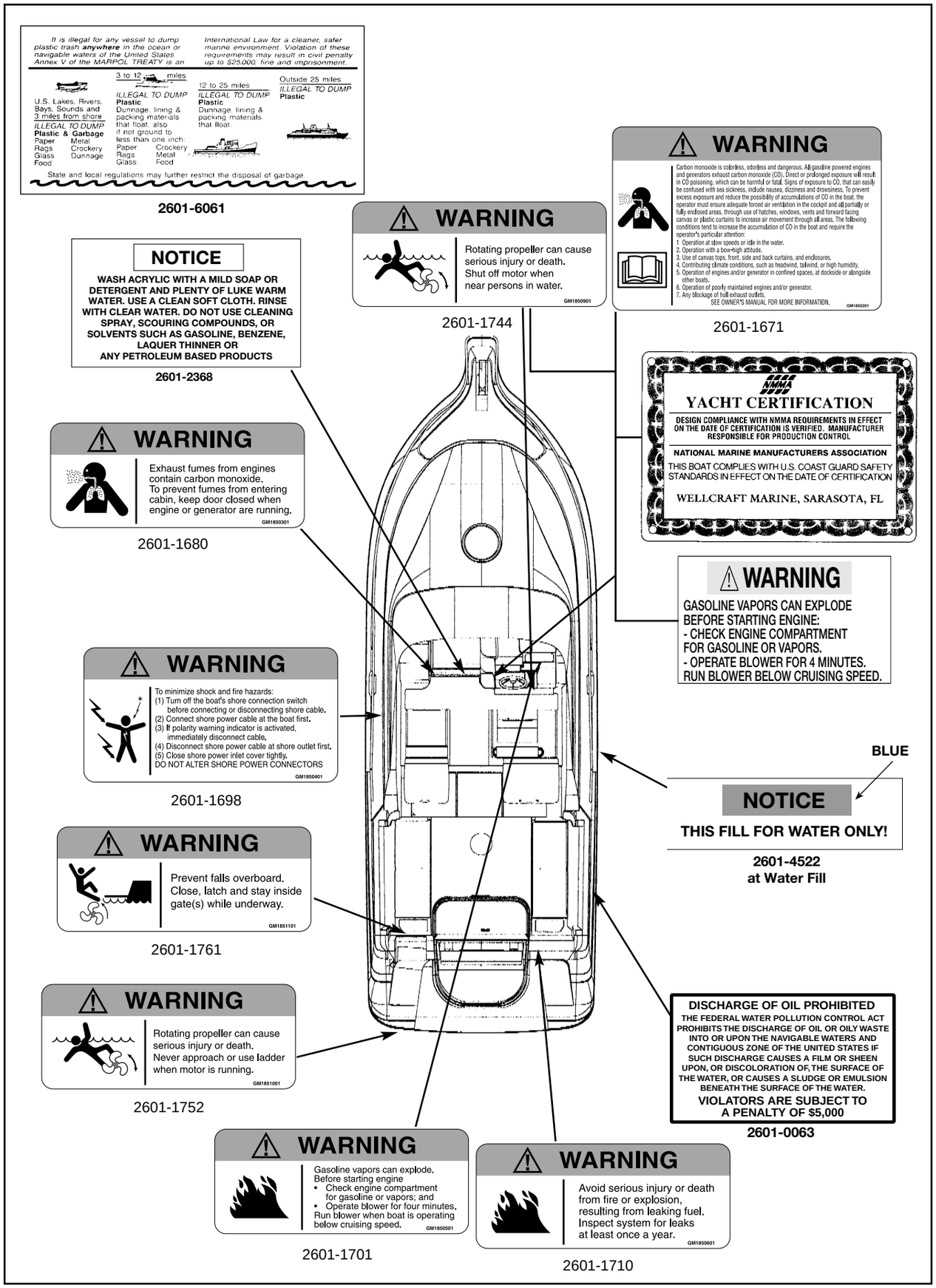

FIGURE 3.31 270 COAST AL I/O

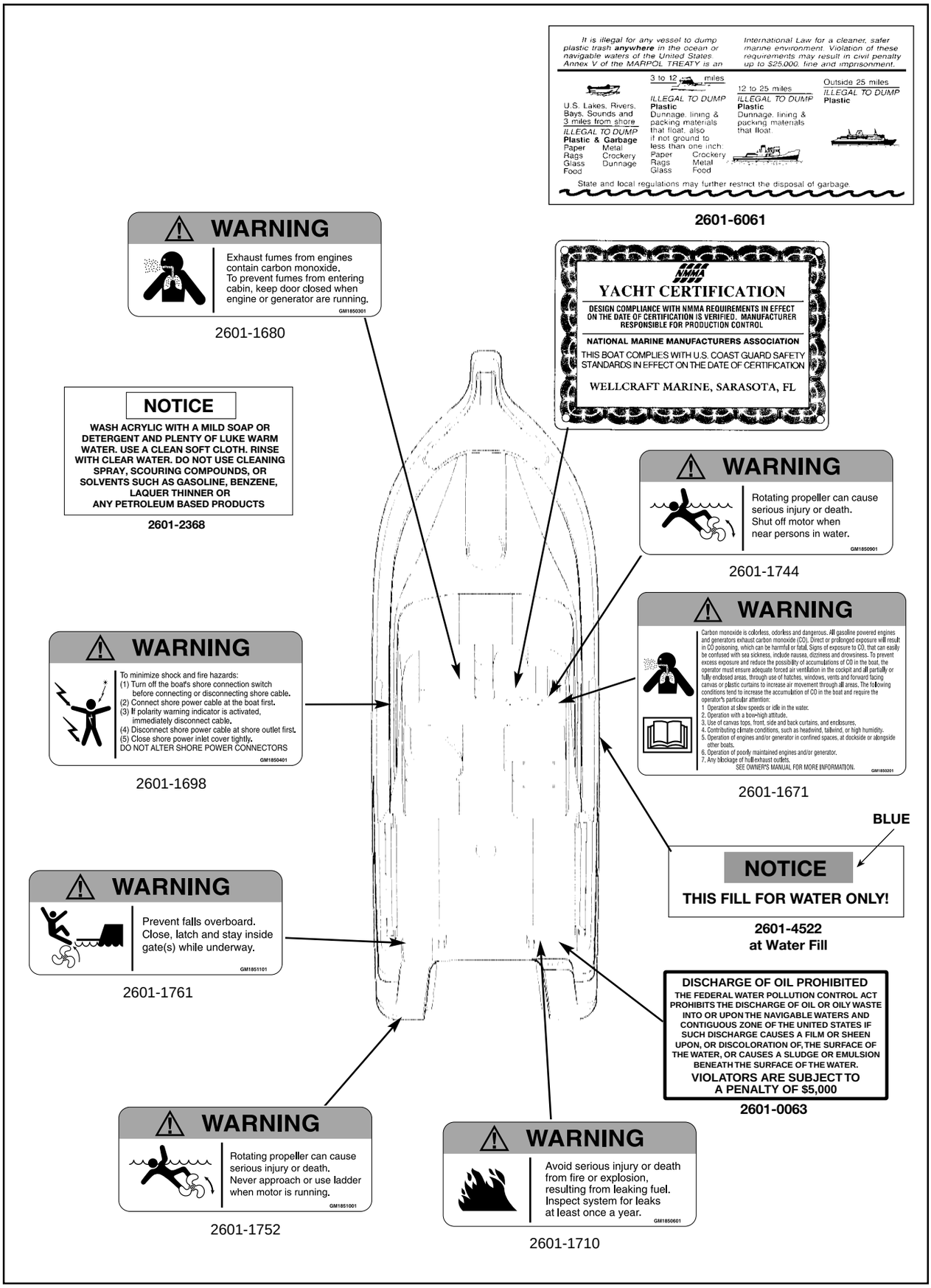

FIGURE 3.32 270 COAST AL O/B

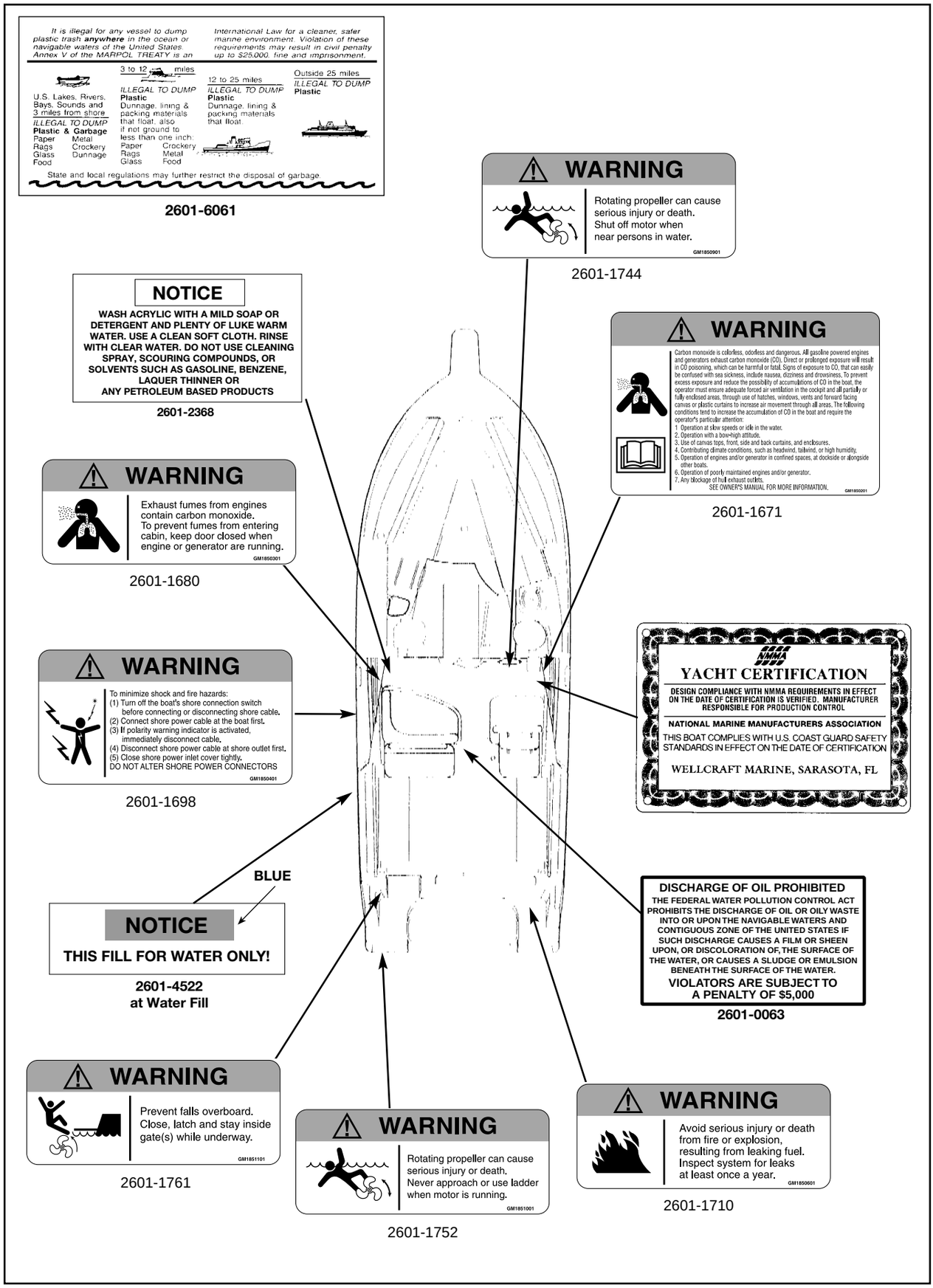

FIGURE 3.33 290 COAST AL

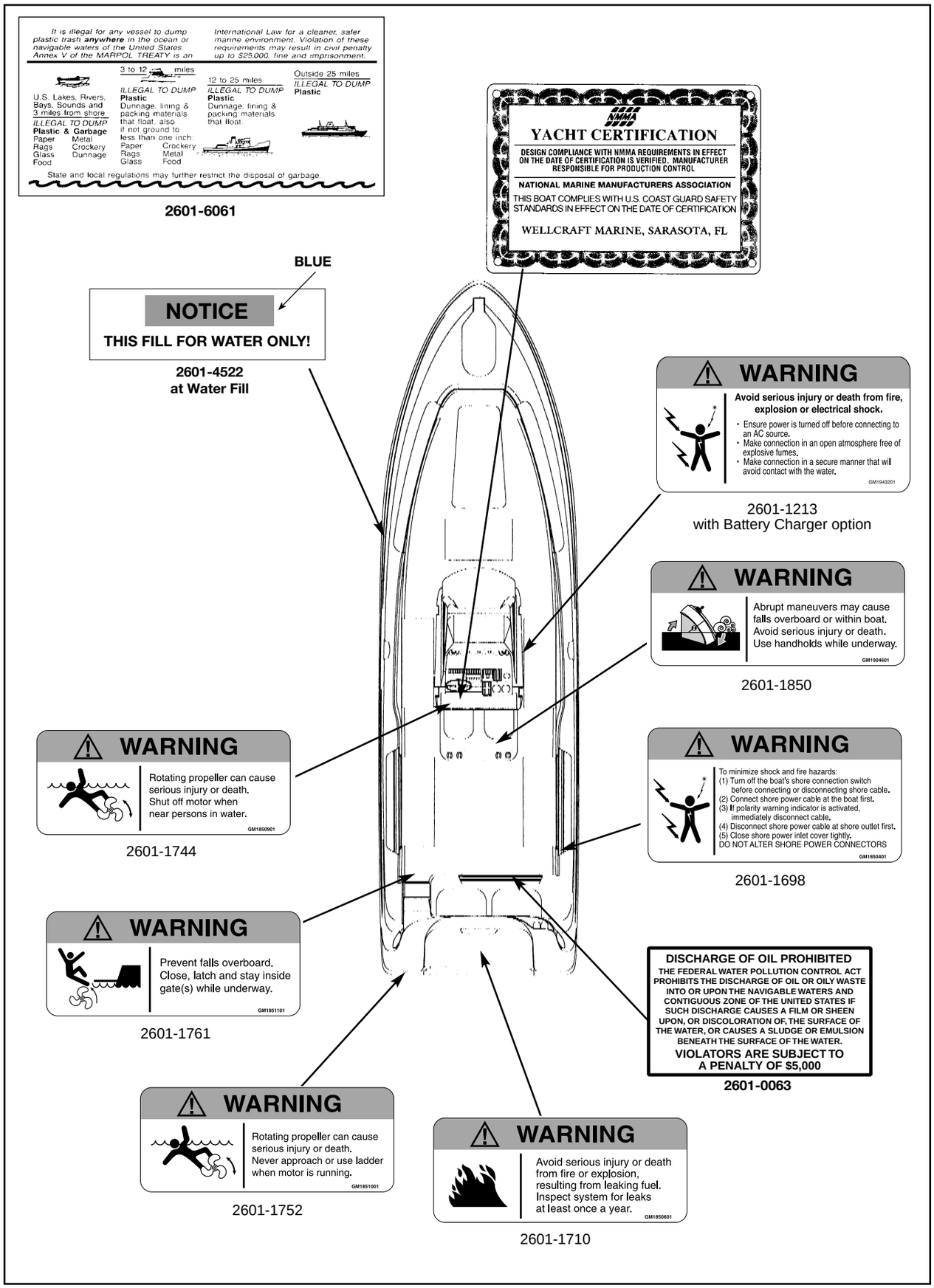

FIGURE 3.34 29/32/35 CCF

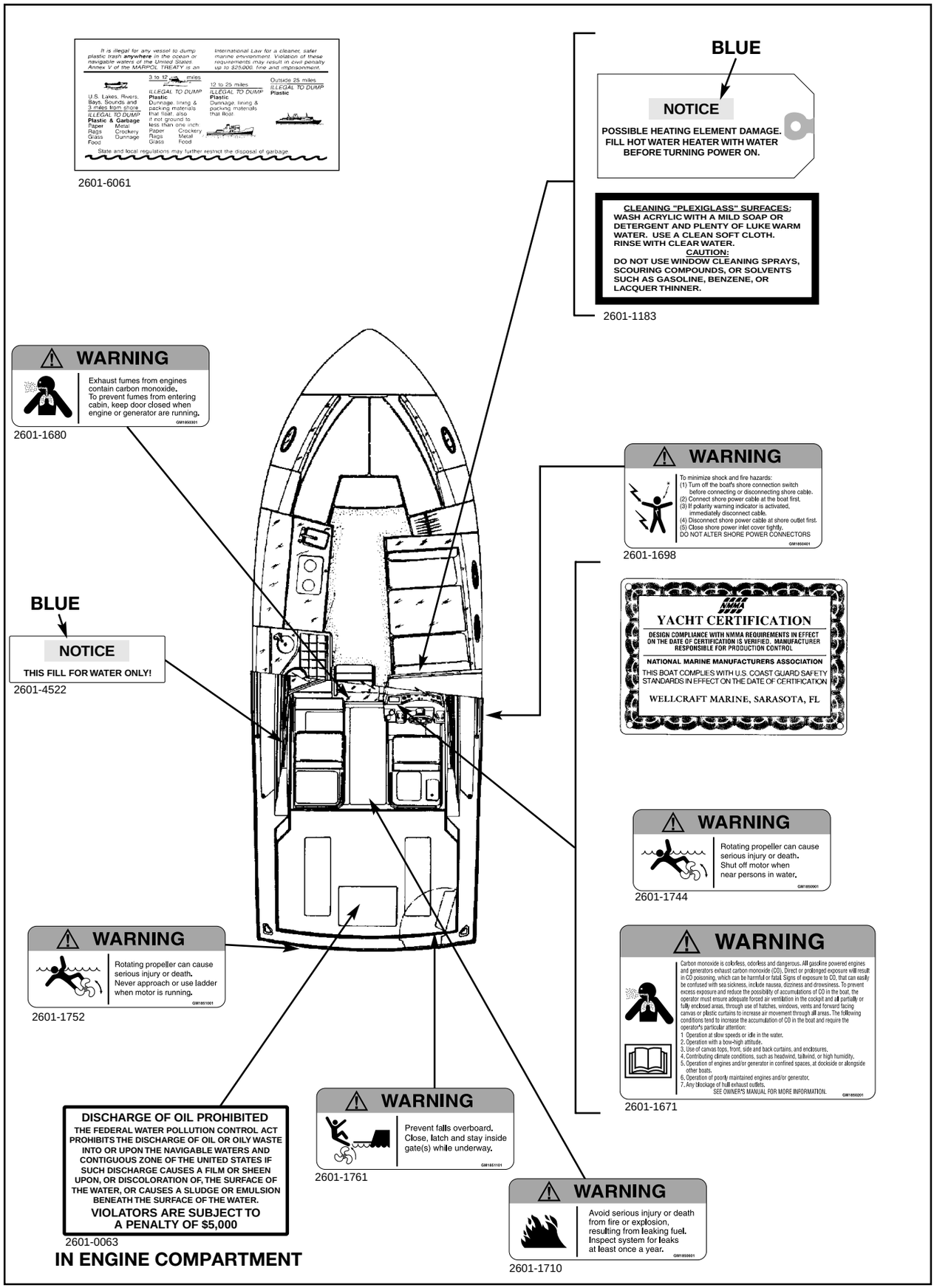

FIGURE 3.35 330 COAST AL

Trailering – 6

Improper towing can result in personal injury and equipment damage. Familiarize yourself with proper towing procedures before taking your boat out on the road.

Improper trailering is a major cause of hull damage. Your boat's warranty does not cover this type of damage. Have your dealer assist you when selecting the appropriate trailer for your boat.

⚠ WARNING

The total weight of your loaded trailer must not exceed the capacity marker on the hitch of your tow vehicle. Overloading can cause hitch failure leading to injury-causing accidents.

IMPORTANT: The published weight is the dry weight of your boat. Dry weight does not include the weights of outboard motors, batteries, gasoline, any optional items, gear or trailers. The weight of these items must be added to the dry weight to determine the proper trailer GVWR needed. On boats equipped with stern drive engines, the dry weight includes the weight of the standard engine. If your boat is equipped with a larger than standard engine, you must allow for this added weight.

GROSS VEHICLE WEIGHT RATING

If your boat does not come with a trailer package, selection of a trailer is extremely important. Your trailer should be able to accommodate the weight of the boat, engine, full fuel tank and any other equipment that will normally be carried. Check the certification label on the frame of the trailer for the Gross Vehicle Weight Rating (GVWR). The total weight of your boat, engine, fuel, gear and trailer should not exceed the GVWR.

IMPORTANT: The side supports should only be tight enough to keep the boat from leaning side to side. Any unnecessary pressure may damage the hull.

Always use bow and stern tie downs to prevent the boat from shifting. Do not put other gear in your boat while trailering.

WEIGHT DISTRIBUTION

If your towing vehicle is equipped with a weight distribution hitch, it must be capable of handling the GVWR. The weight on the trailer should be evenly distributed and can be checked by determining the tongue weight.

Tongue weight is a percentage of the total weight of the loaded trailer on its tongue. Ideal tongue weight is not less than five percent (5%) and not more than ten percent (10%) of the GVWR. For example, if the weight of the loaded trailer is 3000 pounds, the weight on the tongue should be more than 150 pounds, but less than 300 pounds. Excessive tongue weight will cause the front end of the towing vehicle to sway. Insufficient tongue weight will cause the trailer to sway or fishtail.

To avoid personal injury and property damage, be sure to balance the load when trailering. If too much weight rests on the hitch, the front end of the vehicle will sway or oversteer. Insufficient weight on the trailer will cause the trailer to fishtail. In either case, the vehicle will be hard to handle and could become uncontrollable at high speeds.

State regulations usually require that trailers above a specified weight rating be equipped with brakes. Requirements vary; check with your dealer for additional information.

⚠ WARNING

The total weight of the trailer, boat and gear must not exceed the GVWR of the trailer. Overloading can lead to injury, causing accidents.

HITCH

Hitches are divided into classes that specify the gross trailer weight (GTW) and maximum tongue weight for each class. Always use a hitch with the same class number as the trailer. Most boat trailers connect to a ball hitch that is bolted or welded to the towing vehicle. Special heavy-duty equalizing hitches are necessary for trailer tongue weights of 350 pounds or greater.

The trailer hitch coupler must match the size of the hitch ball. The correct ball diameter is marked on the trailer coupler.

SAFETY CHAINS

Safety chains on your boat trailer provide added insurance that it will not become completely detached from the towing vehicle. Crisscross the chains under the trailer tongue (as shown on **Figure 6.1**) to prevent the tongue from dropping to the road if the trailer separates from the hitch ball. Be sure to leave some slack when attaching the chains; otherwise, the angle of the tongue in relation to the tow vehicle can cause the chains to become too tight when the tow vehicle is turning. Safety chain should be of the "Proof Coil" type and must have a minimum breaking strength equal to the upper limit of the GVWR. Some states require chains to be locked so they can't shake, bounce or vibrate off their hook.

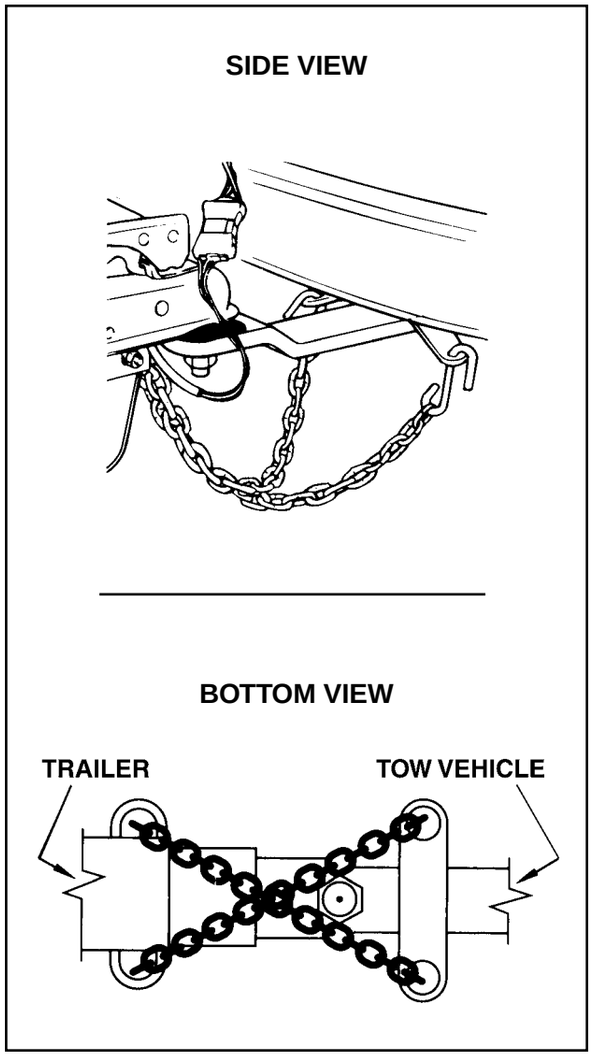

FIGURE 6.1 SAFETY CHAINS

TRAILERING GUIDELINES

1. Be sure that the rollers or bunks displace a large amount of hull surface and the boat and equipment distribute evenly on the trailer.

2. Make sure your boat is properly tied down and a safety chain is used.

3. Do not trailer with your boat's convertible top or its side and aft curtains up. They can be severely damaged.

4. Be sure your trailer is equipped with functional tail lights and turn signals as required by state and federal laws.

5. Check with your state Department of Motor Vehicles for registration and licensing regulations in your state. Some states require that boat trailers be registered and licensed.

6. Be aware that a turn for the trailer will be wider than a turn for the tow vehicle **(Figure 6.2)**. When making a turn, be careful that your trailer does not strike another vehicle or object.

7. Inspect your trailer regularly to make sure the side supports are in good working order. Check bolts which secure rollers and sup-

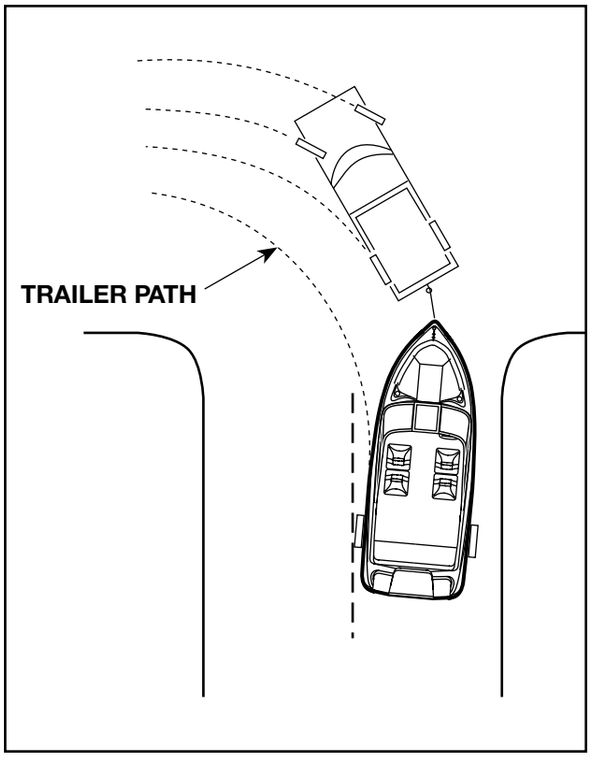

FIGURE 6.2 TRAILER PATH

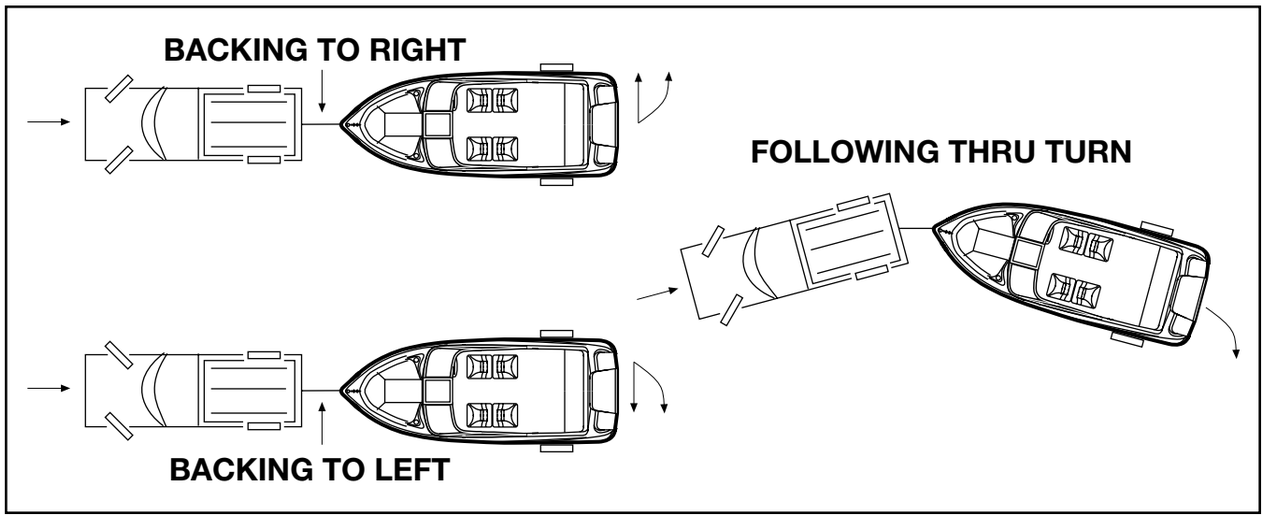

FIGURE 6.3 BACKING A TRAILER

ports for tightness. Check wheel bearings frequently for sufficient grease.

8. Check local and state laws for any additional requirements for trailers.

BACKING A TRAILER

Practice backing with a trailer before you get into a confined launch site. Get accustomed to using your trailer in an open area. Take someone with you who knows how to back a trailer.

Backing a trailer works the opposite of backing a car **(Figure 6.3)**. If the trailer needs to travel to the right, turn the steering wheel to the left and vice versa. Do not turn the wheel too far or oversteer. Turn the wheel gradually until you get the feel of safe backing.

If you do not have experience in backing up with a trailer, practice! Take your trailer to an open area and master using it before you and your boat get into a confined public or private launch site.

LAUNCHING GUIDELINES

Before launching your boat, stay to one side and watch a couple of launchings to notice any problems on the ramp and the effects of the wind and the current on launching. It's a common courtesy to prepare the boat for launching away from the ramp. This preparation includes:

1. Checking that the bilge drain plug is in place.
2. Removing any trailering tie-downs from the boat.
3. Attaching the docking lines and fenders.
4. Disconnecting the trailer lights from the car.

NOTE: If you have a bunk trailer, the boat's transom must be deeper than several inches in the water before launching.

Here are some tips to remember when putting your boat in the water:

1. Have an individual at the launch ramp give you directions. Back slowly down the ramp. If the trailer needs to be maneuvered to the right, turn the towing vehicle's steering wheel to the left. If trailer movement to the left is required, turn the steering wheel to the right. Always remember to launch your boat at a right angle to the shoreline.
2. Before backing your boat down the launch ramp:
   - Remove all stern tie-downs.
   - Properly secure all loose gear.
   - Inventory your safety equipment.
   - Load all personal gear.
   - Lock winch and trailer unit.
   - Disconnect trailer wiring from towing vehicle to prevent short circuits caused by submersion.
4. If launching from a trailer, tilt the stern drive or outboard motor up to the high tilt trailer position to avoid damage during the launch.

5. When the boat's transom is in several inches of water:

   - STOP the towing vehicle.
   - If you have a manual transmission, leave it in gear. If you have an automatic transmission, shift to PARK.

6. Turn off the engine and set the parking brake.

7. Place blocks behind the vehicle's back wheels.

8. Do not detach the winch cable from the bow eye until a mooring line has been secured to one of the boat's cleats. Attach one line to bow and one line to the stern to help control the boat. See the Mooring Lines information later in this section for suggested securing procedures.

9. Launch the boat; move it down and OFF the trailer into the water.

10. Secure boat to dock or have someone hold mooring lines.

11. Lower stern drive or outboard all the way into the water.

12. Pull your towing vehicle away from the launch ramp.

13. Park only in designated areas. When parking, be sure your towing vehicle and trailer do not block other boaters from approaching the launch ramp or hinder their ability to maneuver a boat and trailer when launching.

LOADING YOUR BOAT ON THE TRAILER

Follow these guidelines for loading your boat back onto the trailer.

1. Back the trailer into the water.

2. When the trailer is in several inches of water:

   - STOP the towing vehicle.
   - Leave manual transmission in gear or place automatic transmission in park.
   - Place blocks behind the vehicle's back wheels.
   - Turn off the engine.
   - Set the parking brake.

NOTE: If you have a bunk trailer, the trailer may need to be more than several inches in the water before loading.

3. Tilt the boat's drive up to the high tilt position to avoid damage while loading.

4. Pull boat up onto trailer and secure safety chain.

5. After securing the boat to the trailer start engine on towing vehicle and pull trailer out of water to boat securing area. (If blocks are connected with a rope to the trailer tongue, you will not need to remove them before pulling trailer out.)

6. Remove the drain plug and drain the bilge. Put drain plug in a conspicuous place for the next launch. Securing to steering wheel will help you remember to replace it.

7. Use tie-downs to secure boat on trailer.

8. Make sure stern drive is raised and secure.

9. Wipe hull down to prevent water spots and keep hull clean.

10. Make sure everything in the boat is secure or tied down. Place anything loose in towing vehicle.

11. Reconnect trailer lights. Check that lights are working.

Pre-launch and Underway – 7

LAUNCH AND CRUISE CHECKLIST

- ☐ Get a current weather report. If the weather will not be favorable, postpone your trip.
- ☐ Install hull drain plugs.
- ☐ Inspect the hull and propeller for damage. Excessive dirt or marine growth will affect your boat's performance and fuel efficiency.
- ☐ Check the electrical system and navigation lights.
- ☐ If your boat has been in the water, run the bilge pump until the flow of water stops.
- ☐ If your boat has been out of the water, check to see that all bilge water has drained out. Then install the drain plug.
- ☐ Check that all required safety equipment is on board and in good working condition. Examples include personal flotation devices (PFDs), horn, fire extinguisher, visual distress signals, etc. Take along a gallon of drinking water.
- ☐ Check that all other required equipment is on board. Examples include mooring lines, anchor and line, tool kit, first aid kit, etc.
- ☐ Open engine compartment. Inspect for fuel odors and visible leaks in the fuel, oil, coolant, exhaust and power steering systems.
- ☐ Visually inspect engine for cracked hose, defective belts, or other signs of engine problems. Check engine oil and battery water levels. Check power steering fluid level. Check battery electrolyte range.
- ☐ Check fuel level. Fuel tanks should be filled to slightly less than capacity. Allow for fuel expansion.
- ☐ Check that all engine drains are closed (stern drives).
- ☐ Make sure navigation charts and equipment are on board.
- ☐ Check operation of steering system, navigation lights, and operation of horn.
- ☐ Make sure passengers and crew know what to do in case of an emergency and how to operate safety equipment.
- ☐ Make sure all required documents are on board.
- ☐ File a float plan with a responsible party ashore.

FUELING

⚠ WARNING

Do not smoke, extinguish all open flames, STOP all engines and other devices that could cause sparks, including the bilge blower. Do not use electrical switches or accessories. Shut OFF all stoves that may produce a spark or flame. Close all openings into the cabin area of the boat.

RECOMMENDATIONS

⚠ WARNING

When fueling or having your boat fueled by an attendant, be sure the waste pump-out or fresh water fitting is not mistaken for the gas fill.

Although alcohol boosts the octane level of gasoline, it also attacks the rubber fuel distribution lines and even metal fuel system components. Alcohol will permeate most fuel hoses and other components such as fuel pump, gaskets and seals, and can also contribute to fuel system contamination.

The hoses we use in our boats are alcohol-resistant as are the materials used by the engine manufacturers. If only fuel containing alcohol is available, or the presence of alcohol is unknown, you must perform more frequent inspections for leaks and abnormalities. Any sign of leakage or deterioration requires your immediate attention. Refer to the engine manufacturer's recommendations on fuel type and octane ratings.

PRELIMINARY GUIDELINES

1. Safely secure your boat to the dock.
2. Close all hatches, windows, doors and compartments to prevent accumulation of fuel vapors.
3. Ensure that a fire extinguisher is readily available.
4. Do not store fuel in areas that are not adequately ventilated.
5. Use only fuel lubricants recommended by the engine manufacturer.

PUMPING FUEL

⚠ WARNING

Follow engine manufacturer's recommendations for types of fuel and oil. Use of improper products can damage the engine and void the warranty.

1. Be sure to fuel in a well-lit area gasoline spills are unnoticeable under poor lighting or in the dark.
2. Remove the gas fill cover.
3. Insert the fuel supply nozzle, keeping it in contact with the fuel fill plate to guard against static produced sparks.
4. Stand away from the fuel tank vent and gas fill during fueling. Splashback may occur and can be an eye irritant and/or a fire hazard.
5. Avoid spillage. Wipe up any excess fuel immediately.

⚠ DANGER

Fumes from rags used to wipe up fuel spills can explode if stored on the boat. Dispose of rags properly ashore before getting underway.

6. After pumping approximately 10 gallons of fuel into the fuel tank, inspect the engine and fuel tank area for any signs of leakage. If no leaks or other problems are detected, resume fueling.
7. Allow space at the top of the tank for thermal expansion.
8. If fuel cannot be pumped in at a reasonable rate, check for fuel vent blockage or a kink in the line.

AFTER FUELING

1. Replace the gas fill cover and wipe up any fuel spilled. Discard rags used in a safe place ashore.

2. Open the engine compartment and all hatches, windows, doors and other compartments that were closed during fueling. Inspect these areas for the odor of fuel vapors and visible fuel leakage.

⚠ WARNING

Investigate and correct any sign of fuel leakage or indication of vapors before starting engine. Do not run blower or operate any electrical switch until problem is corrected. Fire or explosion may result.

LOADING PASSENGERS AND GEAR

NOTE: All boats under 26 feet in length must have a capacity rating plate showing the recommended person capacity as well as the maximum capacity of the boat including persons, engine and gear.

⚠ WARNING

Sudden movement of boat can cause loss of balance, falls or ejection from the boat. Severe or fatal injury may result!

When loading your boat, remember to distribute the load evenly. Keep the load low and do not overload. The capacity plate affixed to your boat states the maximum load capacity. The plate shows in pounds, the amount of persons and gear that the boat will safely handle under normal conditions. The U.S. Coast Guard establishes these load capacity ratings. Position passengers and gear so that the load is balanced.

When loading, always step into the boat, never board by jumping. Have someone on the dock pass your gear aboard. Secure all gear firmly so it doesn't move or interfere with operation of the boat. Passengers should board the boat one-at-a-time and be seated. Passengers should remain seated during loading of the boat to maintain an even trim.

⚠ WARNING

Passengers seated in the bow area should not obstruct the driver's vision.

IMPORTANT: Passengers are prohibited from riding on the bow with feet hanging over the side or ride while sitting on the stern, gunwales or setbacks. The Coast Guard considers these acts to be negligent or grossly negligent operation. They are prohibited by law because falls from moving boats are a major cause of fatal recreational boating accidents.

IMPORTANT: The presence of the capacity plate does not relieve the boat operator from the responsibility of using common sense or sound judgment. Turbulent waters and adverse weather conditions will reduce the maximum load capacity rating of the boat.

STARTING PROCEDURES

The operation and maintenance manual supplied with your engine provides pre-start, starting and cold-starting instructions. The following information is merely a guide and not intended to explain in detail all starting procedures and instructions. Refer to your engine owner's manual.

PRELIMINARY CHECKS

1. Secure boat to the dock before attempting to start engine. The boat should be kept secure until the engine is running and warmed up.

2. Operate the bilge pump until the flow of water stops.

3. Make sure the throttle is in the neutral position and stern drive or outboard is lowered into water.

4. Make sure passengers seated in the bow area do not obstruct the driver's vision.

STARTING

⚠ WARNING

To prevent excessive exposure and reduce the possibility of carbon monoxide accumulation in the cabin and cockpit areas of the boat, the operator should provide adequate ventilation in each of these areas. Utilize all hatches, doors, windows and side vents to increase air movement. See Chapter 2 for information about the dangers of Carbon Monoxide.

1. Check all electrical systems and navigation lights.

2. If your boat is equipped with an optional battery selector switch, turn the battery switch to 1, 2 or ALL position.

3. Attach the ignition interrupt lanyards securely to your body. In the event that you move away from the helm area and beyond the length of the lanyard, the engines will be turned off.

4. If your boat has fuel injection, turn the key to start the engine. Engine will not turn over if throttle is not in the neutral position.

   If your boat does not have fuel injection, depress the engine warmup button to advance the throttle several times and leave it in the SLOW/START position. This will actuate the carburetor accelerator pump and feed fuel to the engine. Turn ignition key to START position.

5. When engine is cold, run engine approximately one (1) to two (2) minutes at fast idle speed (1200 to 1500 RPM). This step is not necessary with fuel injected engines.

6. Once engine has warmed up, check water temperature gauge to ensure engine temperature stays within optimum range. If temperature reading is abnormally high, stop engine immediately and inspect for cause of high reading.

7. With engine running, voltmeter should show a reading between 12 and 15 volts.

8. Check steering operation. Turn steering wheel full to port and starboard while observing outdrive movement.

9. Inspect for fuel odors and visible leaks in the fuel, oil, coolant, exhaust and power steering systems.

10. Make sure boat is securely moored to the dock and engine is idling. Then move the throttle forward and then aft and back to neutral to check for proper operation of the shifting motion. Be careful. Leave the engine in gear for only a second or two.

MANEUVERING

⚠ WARNING

Boat steering is not self-centering. Steering is affected by engine and propeller torque, trim tab setting, wave and current action and the speed of the hull through the water. Constant attention to steering is required for safe operation.

When all your pre-departure checks have been completed and the engine has warmed up, you will be ready to leave the dock. Take into account the amount of wind, tide current, and other forces that may affect your maneuvering as you leave the dock. Idle speeds work best when maneuvering to and from the dock. Do not forget to release the mooring lines.

LEAVING THE DOCK

You are ready to leave the dock after the engine has warmed up. Check all gauges for appropriate readings before casting off. If oil pressure is abnormally low or engine temperature is abnormally high, stop the engine immediately. Check voltmeter to be sure the charging system is working properly. Check for fuel, oil, and exhaust leaks. Correct the cause of any abnormal condition before getting underway.

⚠ WARNING

Make sure passengers sitting in the bow area do not obstruct the operator's vision when casting off or while underway.

After making sure your boat is ready, check wind, tide, current and other forces that will affect the way you maneuver your boat away from the dock. Throw mooring lines off to your boat. Shift your boat's engine into forward or reverse depending on whether you want to move the bow or the stern away from the dock first. Run your engine at a slow speed as you move away from the dock. If you move the bow out first, watch that the stern of the boat does not swing into the dock or a piling.

Once away from the dock, devote some time to learning how to maneuver. Practice docking using an imaginary dock. Practice stopping and reversing.

STOPPING

Boats have no brakes. Stopping is accomplished by backing down on the throttle. Practice stopping maneuvers and learn early how your boat reacts. From forward motion, pull the throttle back towards NEUTRAL. Depending on your speed, the distance the boat travels until it comes to a complete stop will vary. The ability to measure the distance will only be acquired through experience.

Once the boat has slowed and motor is idling, place the shift in REVERSE. Gradually increasing reverse power with the throttle will allow you to stop the boat in a very short distance.

NOTE: A boat will not respond to steering in reverse nearly as well as it does when going forward, so do not expect to accomplish tight turning maneuvers when backing up.

Remember that all boats steer by the stern (the feeling is much like steering your automobile in reverse). This means that the stern of your boat will swing in the direction opposite to your turn. For example, when you turn the helm wheel to the left, the stern of your boat will swing in the direction opposite to your turn. This is especially important to keep in mind when docking, operating in close quarters with other boats, or when approaching a swimmer or downed skier in the water.

Always look behind you and to both sides of the boat before slowing down. Tell your passengers your intentions to allow them time to make adjustments to their balance or positions.

⚠ WARNING

Check behind you before coming OFF plane. Many accidents occur each year as a result of a driver coming off plane ahead of a boat that is unable to slow down in time to avoid collision.

Slowly pull back on throttles, glance back and see if a large following wave is approaching the transom. If so give the engines a little throttle as the wave arrives to keep wave from rolling over the transom.

Once you have spent enough time practicing maneuvers and have a feel for how the boat handles, you will be ready to run in open waters.

ACCELERATION

⚠ WARNING

Always look behind you and to both sides of the boat before accelerating to plane. Tell your passengers of your intentions to allow them to make adjustment to their balance or positions.

⚠ WARNING

Before accelerating to bring you boat on plane, be sure that the area in front of your boat is clear. The bow will rise out of the water momentarily before you plane and may temporarily obstruct your vision.

If you have never had your boat on plane before, choose a calm day for your first on plane experience. Never boat beyond your ability and experience.

Before bringing your boat "on plane", check the entire area to make sure you have a clear, safe path. As you throttle up to accelerate, your boat will increase its angle of trim, causing the bow to ride high. From a maximum angle, the boat will level out to its planing attitude with continued acceleration. This maximum angle is known as the "hump". Because visibility, handling, and performance are reduced, it is advisable to get "over the hump" as soon as possible. A few seconds at full throttle should get the boat over the hump and into its planing attitude.

After getting over the hump, accelerate until reaching a comfortable plane, then throttle down to cruising speed. This also will provide for better fuel efficiency.

TRIMMING YOUR BOAT

Trim tabs are used to add lift to the boat's stern, thereby changing the boat's attitude **(see Figure 7.1)**. This lift can help the boat get on plane faster and remain on plane at slower speeds than if no tabs were used. Used independently, tabs can also correct listing conditions caused by crosswinds, unbalanced loading and quartering seas. Trimming your boat properly involves two separate procedures, trimming or tilting the lower unit and setting the trim tabs.

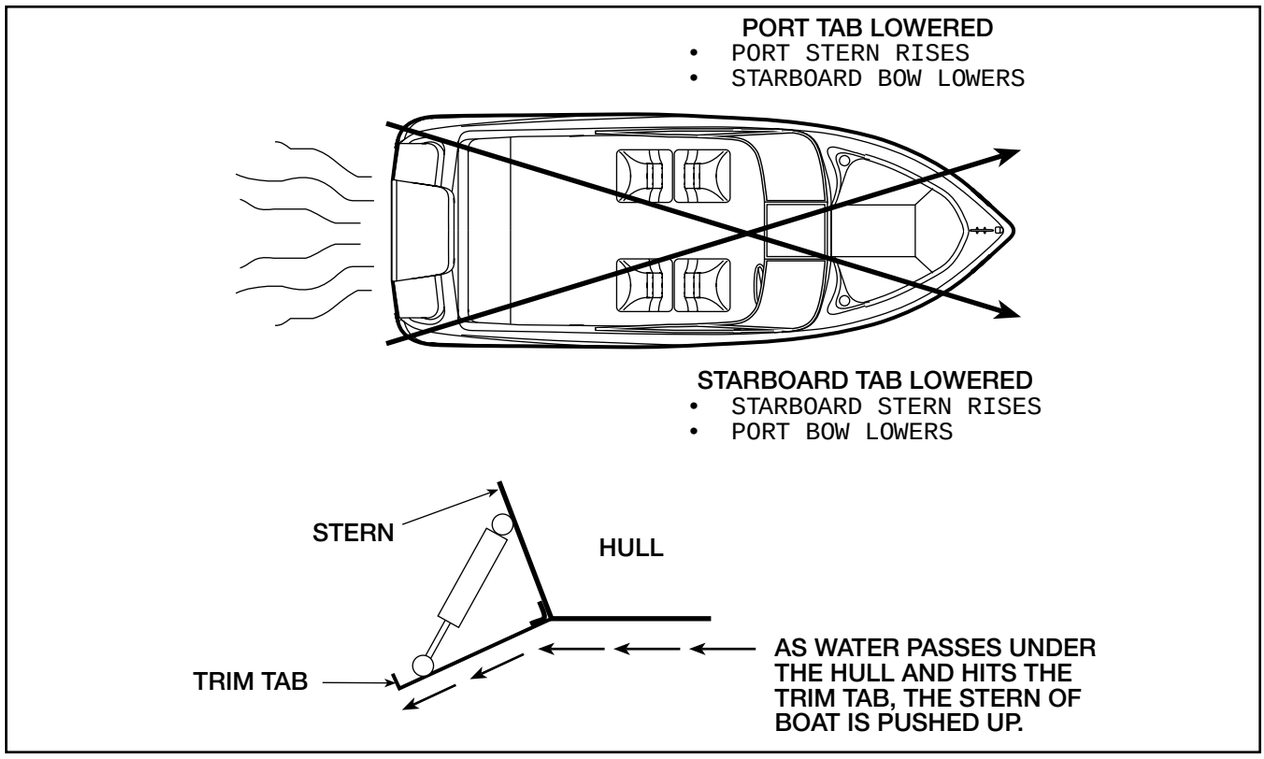

FIGURE 7.1 TRIMMING THE BOA T WITH TRIM T ABS

When you are sitting dead in the w ater, your outboard should be down and the trim tab switches are in the BO W UP position. Accelerate until you get onto plane. At this point your boat will be plowing through the w ater with the bow down too far. Trim the low er unit up slightly until the bow comes up. If you trim the low er unit out too far, your boat will por poise or the propeller will cavitate, and the bow will slam up and down on the water. Your boat is trimmed cor rectly when it is just shor t of por poising or propeller ca vitation, under ideal r unning conditions.

Trim your boat to compensate for seas, winds, or uneven loads.

Head Seas	Trim drives in more than usual. Use tabs to keep bow down and go at a slower speed.
Following Seas	To prevent taking seawater over the bow, trim drives out and keep tabs up to keep bow up.
Listing Due to Quartering Seas, Beam Wind, or Uneven Load	Use tabs independently to adjust for list. If listing to starboard, press port bow down switch. If listing to port, press starboard bow down switch.

Remember that most boats react ver y slowly to trim tabs. Often boat owner s do not give trim tabs time to wor k. Press the trim tab switches for only two seconds at a time and then allow some time for the boat to react. If the boat is still listing after a minute or two, press the trim tab switch again for a two second inter val. The labels on the trim tab switches indicate what you w ant your boat to do, not what you w ant the tabs to do.

It is a good idea to tak e your boat out onto open water shor tly after you get it and experiment with the trim tabs. After you get your boat onto plane, set the tabs in various positions and note how your boat reacts. This will give you a feel for how the trim tabs wor k.

It is possible to extend the cylinder life expectancy on your trim tabs. T o do this, k eep the cylinders retracted while at dockside. Press both trim tab controls down until tabs reach their full up position.

TILT/TRIM CONTROL SWITCHES

NOTE: Trim refers to the angle of the low er unit or outboard motor in relation to the bottom of the boat. With respect to trimming , the words *in*, *down*, *under*, and *forward*, have the same meaning as do *up*, *out*, and *aft*.

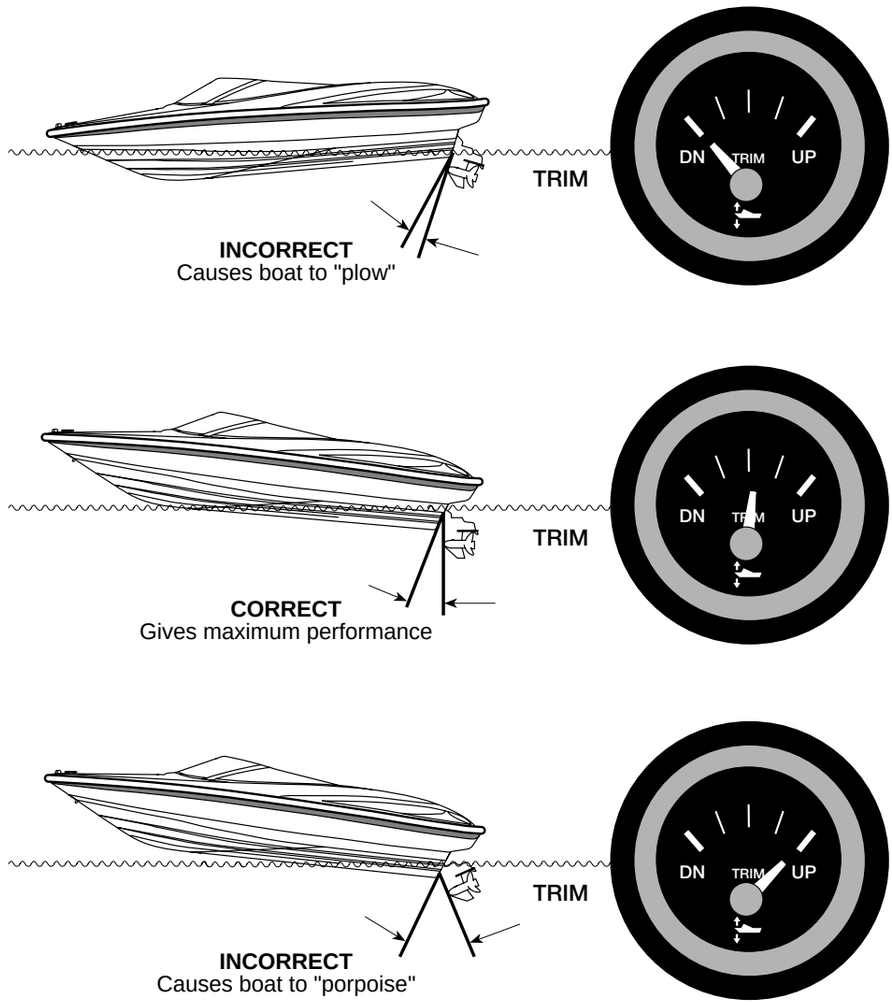

Note: Correct trim angle will vary with different boat and engine combinations.

FIGURE 7.2 TRIMMING THE BOA T OUTDRIVE

1. The standard trim control switch is located on the control le ver handle.

2. The switch controls the position of the ster n drive or outboard motor . Proper trim is ver y important in boating .

3. In the case of low or hea vy bow attitude, the boat tends to “plow” **(Figure 7.2)**. The low er unit is trimmed too far under or forw ard. Trim the unit UP (out) to cor rect this situation.

4. If the bow is too high, the boat tends to “porpoise” **(Figure 7.2)**. The drive unit is trimmed up or out too far. Trim DN (in) to cor rect.

5. A good practice is to get underw ay (especially when fully loaded or pulling a skier) with the unit trimmed all the w ay DN (under). After the boat is on plane, adjust the trim out slightly to obtain the proper bow attitude and engine speed.

6. Trim also affects propeller selection and fuel efficiency. All models should be “propped” to be in the upper half of the maximum RPM range with the boat lightly loaded and the drive trimmed up to maximum. This configuration allows the engine to operate within the recommended RPM range with a hea vy load.

   The power unit should ne ver be trimmed up to a point where the propeller ca vitates (or slips). A rapid increase in engine RPM’ s is evidence of ca vitation. If this occur s acci-

dentally while running at full throttle, immediately lower the drive trim and reduce the throttle until the slipping stops. If necessary, have your dealer reset the trim limit switch (if provided) to avoid overtrimming in the future.

If the prop slips at lower planing speeds, the drive may be trimmed too high. Immediately lower the drive unit until the prop grabs again to restore efficiency.

7. Trimming out, in addition to raising the bow, also lifts the boat higher, gaining speed because less hull is in the water.

8. Raise tabs all the way up when coming off plane. Retrim boat when accelerating again. Readjust tabs if necessary to compensate for new direction of wind or seas.

9. The trailering position of some stern drives is controlled by a separate switch on the dash switch panel or throttle/shift control. ***Do not activate this switch while engine is running. Doing so can severely damage the lower unit and engine.***

NOTE: Refer to the control instructions regarding the power trim controls installed on your boat.

ANCHORING

1. The weight of the anchor and diameter of anchor line should be governed by the size and weight of your boat. Get advice from your dealer before you buy an anchor.

2. Keep anchor secure while underway to prevent damage or injury due to sudden shifting in the boat's attitude. For all types of anchors, either secure anchor with an anchor safety clasp. or secure anchor by tying it to a deck cleat.

3. Use two or more anchors if anchoring overnight or for extended periods. If not using two anchors, make certain there is sufficient clearance for your boat to swing in a full circle to prevent damage in case of shifting winds.

4. Make certain you have enough anchor line (or scope) for the depth of water. Your anchor line should be 6 to 7 times the depth of water anchored in. For example, if you are in 20 feet of water, use 120 to 140 feet of anchor line.

⚠ CAUTION

Secure anchor line only to bow eye or deck cleat. Never tie anchor line to a rail, rail fitting or other hardware not designed to support this stress.

DROPPING ANCHOR

1. Have a crew member carefully lower the anchor. Keep slight tension on the anchor line while lowering and maintain your tension after reaching the bottom.

2. Maneuver the boat slowly backwards until length of anchor line is 6 or 7 times the depth of the water.

3. Fasten the anchor line around the bow eye or deck cleat. Anchor flukes should dig in and catch. Watch for anchor drag by checking shoreline landmarks at the time the anchor is dropped and one-half hour later. If the boat has drifted away from these reference marks, the anchor is dragging and must be reset.

WEIGHING

1. Start the engine running before pulling in anchor.

2. Slowly maneuver the boat forward to reduce tension on the line and make retrieval of the anchor line easier.

3. Pull in anchor line until the line is vertical. Pull firmly to lift the anchor's shank and free the flukes from the bottom.

If the anchor becomes stuck, attach the vertical line to the mooring cleat. Wave action on the bow may lift flukes from the bottom and free the anchor. If the anchor is still stuck, feed out a few feet of line and attach it to the bow cleat. Maneuver the boat around the anchor, keeping the line firm. Determine the angle that will work to pull the anchor free.

Anchors are available in different shapes, sizes and weights to fit different boats, uses, and conditions. Your dealer can tell you which anchor will work best for your boat.

NAVIGATION LIGHTS

Although night activities are limited, cruising at night can be very pleasurable. It can also be

dangerous if you don't pay close attention to water levels and obstacles. Be especially careful of shallow waters and watch for submerged debris, rocks and other obstacles in the water. Your navigation lights are intended only to prevent collision, not to improve your night vision. You may choose to use a spotlight instead.

NOTE: It is illegal to use your spotlight as a headlight. Use it only temporarily to check the position of your boat and the surrounding area.

Your boat has one white (stern), one red (port) and one green (starboard) light. The stern light may be a removable pole light. To use the light, line up the two-prong plug in the pole with the receptacle in the base. Plug the light in, and lock it into place with lever/slide lock. When not in use, stow the light inside your boat for safekeeping. This light can be turned on or off at the helm.

Check lights for proper operation before heading out at night. You should also learn to identify the running light combinations for other vessels. We recommend that you participate in a boating safety course to further learn about navigation lights and safe boating practices.

The anchor lights and navigation lights are controlled by a switch at the helm. The anchor light switch allows you to turn on just the stern (white) light when anchored or moored. While underway, use the navigation light switch to turn on the stern (white), port (red) and starboard (green) lights. Lights are off when switches are in the OFF position.

HAZARDOUS CONDITIONS

STORMS

Storms sometimes appear without advance notice. Although weather information from meteorological observation and reporting stations is available, weather bureaus are known to have failures in their predictions or information gathering equipment. There is no substitute for a strong understanding of what action to take when the weather takes a turn for the worse. Many marinas fly weather signals. You should learn to recognize these signals and monitor your local weather forecasts before leaving port.

The present and forecasted weather conditions are of primary consideration, but a threat of possible storms should always be a concern. Observance of the following information will help in your safety afloat if storms do occur:

- Keep a watch on the horizon for approaching storm indicators.
- Turn radio ON. Dial in local weather station and monitor forecast. If your boat has a VHF radio, check the weather channels.
- The best possible situation is to return to a safe port if time allows.
- Close and secure all portals and hatches. Stow all loose gear below deck and tie down any gear required to remain on deck.
- Reduce speed as the seas build. Make sure all passengers are wearing their PFDs.
- If you lose power, keep the boat headed into the waves by rigging a sea anchor off the bow **(Figure 7.3)**. If there is no sea anchor on board, use a canvas bucket or any object that will offer resistance.

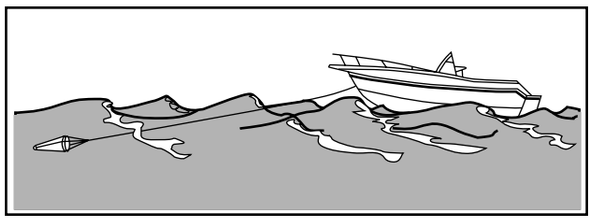

FIGURE 7.3 SEA ANCHOR

- Radar reflectors (if installed on your boat) should be 18 inches diagonally and placed 12 feet above the waterline.

FOG

Fog is a result of either warm surface or cold surface conditions. You can judge the likelihood of fog formation by periodically measuring the air temperature and dew point temperature. If the spread (difference) between these two temperatures is small, you likely will incur a fog situation. Remember the following guidelines:

- Turn on running lights.
- As fog sets in, take bearings and mark your position on the chart while continuing to log your course and speed.
- Make sure all persons aboard are wearing their PFDs.
- If your boat has depth finding equipment,

take sounding and match them with soundings on your charts.

- Station a person forward on the boat as a lookout.
- Reduce your speed. From time to time, stop engine and listen for fog signals.
- Sound the proper horn or fog bell at proper intervals to warn other boaters.
- If there is any doubt in continuing boat movement, anchor. Listen for other fog signals while continuing to sound the proper fog horn or bell for a boat at anchor.

RUNNING AGROUND

⚠ WARNING

To prevent boat damage, DO NOT use deck hardware or water ski pylon for towing. Use a commercial towing service.

Operating in shallow water can present a number of hazards. Sand bars in narrow inlets are constantly shifting, making it difficult to mark them with buoys. Sometimes sand bars are indicated by waves as they form into breakers when passing over sand bars. In coastal areas, tides can change water levels by as much as 30 feet. Check with local marinas or Coast Guard stations for tide tables and current charts.

If your boat runs aground, first check persons aboard for injury. Then check for damage to the boat. If the drive unit strikes an underwater hazard, check for boat and drive unit damage. If the engine vibrates excessively after striking an underwater obstruction, it may indicate a damaged propeller. If vibration is noticeable, return to port slowly to prevent further drive and engine damage from an out-of-balance condition. Watch the temperature gauge to make sure you do not overheat the engine.

If the boat is not taking on any water, it may be possible to rock the boat by shifting the weight of the passengers and gear and by raising the drive unit while reversing the engine.

If you ground your boat on a sand bar, shut down the engine and seek help from another boater or radio for help. See your dealer as soon as possible, as sand ingested in the engine cooling system can cause major engine damage.

WARNING MARKERS

It is a good idea to find out about hazardous areas and how they are marked by asking your local authorities.

- Boaters must also recognize the flag designs which indicate that scuba divers are present and keep well clear of the area.
- Watch for swimmers. Swimming areas may not be marked. Steer clear from the area and always remain alert.
- Distress flags indicate a fellow boater is in need of assistance.
- Navigation markers serve as a means of identifying navigable routes and indicate water hazards. Boaters should become familiar with navigation markers and stay within marked boundaries and clear of hazards.

REACTING TO EMERGENCIES

Be prepared to deal with emergencies before they happen. Try to formulate a plan for each type of emergency in advance so that decisions can be made quickly and without hesitation. Precious moments lost can mean the difference between losing and saving a life.

FLOODING

If your boat starts taking on water, activate the bilge pump immediately. Make sure all passengers are wearing their PFDs. Open the engine compartment, look for the cause of the flooding. Check all hoses, through hull fittings, seacocks and strainers. If flooding occurs as a result of collision or grounding damage, call for assistance and head for shore if possible.

CAPSIZING AND MAN OVERBOARD

By far, the largest number of boating fatalities involve capsizing and falling overboard accidents. By being prepared ahead of time with an appropriate plan of action, you can greatly lower your chances and your passengers' chances of becoming seriously injured.

CAPSIZING

Wear PFD's or have them readily available at all times. If your boat capsizes, and others were on board, locate them and guide them to the safety of the hull. Even if the boat floats in an upside-down position, stay with it. The boat hull is much easier for rescuers to spot than a human head sticking out of the water. DO NOT attempt to swim ashore, it may be further than it looks.

MAN OVERBOARD

Think through and follow these procedures if someone in your boat falls overboard.

- Remember, every second counts, you must act fast.
- Move throttles to idle position immediately and yell "MAN OVERBOARD."
- Throw some floating object overboard immediately. Keep your required Type IV PFD accessible at all times for such an emergency.
- Keep the person in the water in sight at all times. Have a passenger do nothing but watch the person. Do not go into the water to help the victim. One person in the water is enough trouble.
- Circle around quickly, approaching into the wind and waves. When the person is alongside, put the engine in neutral and throw them a Type IV PFD with a line attached or extend a paddle or boat hook within his/her reach.

COLLISION

If a serious collision occurs, you should first check the condition of all passengers aboard, then inspect your boat to determine the extent of damage.

1. Make sure all persons aboard are wearing their PFDs.
2. If you need help and your boat has a ship-to-shore radio, first contact the U.S. Coast Guard (VHF Channel 16) or other rescue authorities immediately.
3. Prepare to assist the other vessel unless your passengers and/or boat are in danger.
4. If the bow of the other boat penetrated your boat's hull, prepare to block the opening once the boats are separated.
5. Shore up the hole with a spare PFD or bunk cushion from your boat.
6. While blocking the hole, trim the boat so that the hole is out of the water.

FIRE

Most fires are caused by electrical problems or careless fueling practices. A fire on board your boat is a serious emergency. You must work quickly to implement safety procedures. If a fire occurs, immediately stop the engine.

1. Make sure all persons aboard are wearing their PFDs.
2. If the fire is small, attempt to put it out with your fire extinguisher. If the fire is in the engine compartment, turn off the bilge blower. Do not open the engine compartment. This feeds oxygen to the fire and may cause it to flare up.
3. If the fire gets out of control, execute a distress signal and call for help if equipped with a ship-to-shore radio.
4. All persons aboard should jump overboard and swim a safe distance away from the flames.

IMPORTANT: All persons aboard should know the location and proper operation of the fire extinguishers.

Guidelines

- Use only approved marine cooking and heating systems.
- Open flames demand constant attention.
- Keep flammable materials in approved containers in a overboard vented locker sealed from the interior of the boat.
- Ensure ventilation systems are unobstructed.
- Remove mooring covers before starting engine.
- Check the bilge for fuel leaks.

- Extinguish smoking materials carefully .
- Use special care with flame or high temperatures around urethane foam.
- Check cleaning products for flammability .
- Ventilate when cleaning or painting .
- Disconnect electrical system from its power source before performing maintenance.
- Replace breaker or fuse with same amperage device.
- Electrical appliances must be within rated amperage of boat circuits. Observe the boat carefully while the electrical system is being energized.
- Allow only a qualified marine electrician to service the boats electrical system.

MEDICAL EMERGENCY

Accidents while boating can and may happen. Be prepared to handle these emergencies when they happen. Keeping a first aid kit and dry blankets on board can assist during these situations. It is also a good idea to contact your local Red Cross for information and training on first aid and CPR.

PROPULSION FAILURE

Before you call for help regarding an engine or drive unit failure, it is a good idea to eliminate the possibility of simple problems. Turn off the engine and check to see that (1) there is fuel in the tank; (2) the engine cooling intakes on the outdrive are not clogged; (3) props are clean and free of weeds, netting, etc.; (4) no hoses are leaking; (5) there is oil in the engine.

Once you have checked out the possibilities listed above and find they are not the problem, call for help giving your position and a detailed description of your boat.

CONTROL FAILURE

In the unlikely event of a shift/throttle failure, shut down the engine immediately . Carefully check the control connections in the engine compartment to see if they are secure. If not, try to locate the attaching hardware and reassemble. If that is not possible, try to use whatever is available such as paper clips, hair clips, tape, etc., to secure the connections. If a temporary repair is made, return to port at the slowest steerable speed and be prepared to take emergency action should the temporary repair fail also. Have your dealer make repairs before using the boat again.

STEERING FAILURE

If a problem with the steering occurs, shut down the engine immediately . Check the connections to the outboard motor or drive unit in the engine compartment. Some boats have a push/pull cable while others will have hydraulic hose connections. With cable connections, check the attaching hardware and tighten it if necessary. If you have hydraulic hose connections, check to see if they are leaking. If so, tighten the connections and check the hydraulic fluid reservoir level. Most stern drives are power assisted and have their own hydraulic reservoir and engine mounted drive pump; check the level of reservoir and drive pump belt. If the steering is not operating properly, do not operate the boat and call for assistance.

ADDITIONAL UNDERWAY INFORMATION

- Always be aware of local laws on noise limits. Noise means engine noise, radio noise or even yelling by people on your boat. Good seamanship demands that you operate your boat quietly so as not to infringe on the rights of others. Don't use thru-transom exhaust unless you are well off shore.
- You are responsible for any damage or injury caused by your boat's wake. Observe no wake speed zone warnings. Operate your boat with regard for the safety of other boats and people in your boating area.
- Keep your engine well tuned to decrease exhaust hydrocarbon emissions that pollute the air and water.

RETURNING TO SHORE

DOCKING

Always approach the dock slowly . Think before acting. If you are wondering whether your boat will fit in a space against a dock, remember that pilings are often (but not always) spaced 10 feet apart.

Remember that it is easier to control a boat in reverse because a boat steers from the stern.

When backing into a slip, back so that bow swings into the wind if possible. You will have more control.

If you have a twin engine boat, center the steering wheel. Use the throttles and shifters to control the boat's movement.

If possible, come in against the wind or current, whichever is stronger. Approach the dock at a 30-45° angle. As the boat nears the dock, slowly swing parallel to it. Tie the bow line first; then the stern.

If wind or current is moving toward the dock, move parallel to the dock further out. Let the wind or current push you in. Tie the stern first, then the bow.

Use extreme caution if wind or current is from your stern. Back in towards the dock slowly at a slight angle with engine in slow reverse. Gently swing parallel. Tie stern first, then the bow.

If the weather looks bad, use spring-lines from the bow and stern to dock amidships of the boat. Tie up on the downwind side of the dock. If the wind is changeable, place fenders over the side between the boat and the dock.

MOORING

After you have positioned your boat next to the dock, you must secure it with mooring lines to keep it in position. Mooring lines must be long enough to secure your boat in any docking situation. For example, the length of the lines for a 16-foot runabout should be at least 15 feet. An eye splice at the end of each line works well with bow or stern cleats.

The mooring lines you will use most often are the bow line, the stern line, and spring lines as shown on **Figure 7.4**. Each line has a specific purpose. The bow line and the stern line secure your boat's bow and stern. The two spring lines keep your boat from moving forward or backward when you are moored alongside a dock.

If you are mooring your boat for a short time, bow and stern lines may be the only lines you will need. If you are mooring your boat for a longer time or the currents are swift, you should use spring lines. The stern spring line leads from the boat's stern cleat forward to the piling or cleat on the dock. The bow spring line leads from the bow cleat aft to the dock.

If you are mooring your boat in a slip, bow and spring lines, port and starboard, will keep your boat in position.

NOTE: If tides are a consideration, be sure to leave slack in the lines to make up for the rise and fall of the water while your boat is docked.

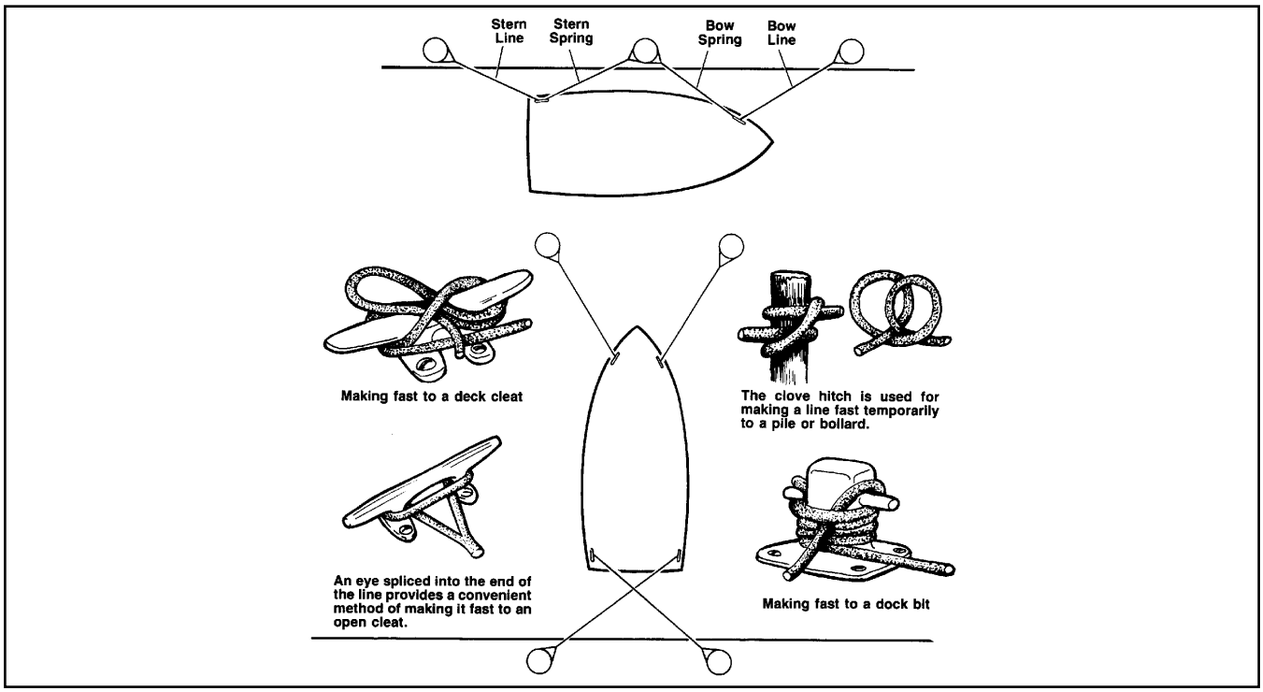

FIGURE 7.4 MOORING LINES

Boat Equipment – 4

This section of the manual includes information about major systems or components on your boat. Section 5 discusses boat controls. Please note that this manual does not designate equipment as standard or optional. Some equipment is not available on some models. If you have questions, see your dealer for more information.

12-VOLT DC ELECTRICAL SYSTEM

⚠ WARNING

Considerable care has been taken to design a safe electrical system to protect you from hazardous shocks. To protect from hazardous electric shock, always have a qualified technician make any modifications to the system.

Your boat's 12-volt DC system obtains its power from a battery. The battery is charged through the engine-driven alternator. Some models have an automatic battery charger which can be plugged into any 110V AC outlet on shore. The voltmeter on the dash instrument panel indicates the charging level of the battery. Depending on which model you own, the instrument panel at the helm has circuit breakers and switches that control the operation of DC equipment on your boat.

The negative terminal of the battery is connected to the grounding studs of the main engine. This type of negative ground system is the approved system for marine DC electrical systems. If additional equipment is to be installed, it must be adaptable to the negative ground system. When installing additional equipment, ensure that each item's current supply is taken from the main DC distribution panel. This service should be performed only by your dealer. All required additional circuit protection must also be added at the DC distribution panel.

NOTE: Power feeds for accessory equipment must NOT be taken from the voltmeter terminals.

WIRING COLOR CODE

The American Boat and Yacht Council (ABYC) has published a standard for color coding of boat wiring. We voluntarily comply with this standard to simplify installing new equipment or troubleshooting the electrical system. Here is the color code system:

RED wire is used for the positive (+) side of the battery in DC systems on wires that go to fuses or circuit breakers, to distribution panels and high-draw equipment (engine starters), start ignition switches and to meters.

YELLOW WITH RED STRIPE wire is used on one circuit only; from the starter switch to the starter solenoid.

NOTE: There are 10 basic colors and color combinations for different circuits used beyond the ignition switch. Some of these colors, however, can serve more than one type of circuit. For example, they can be used in engine and non-engine circuits.

YELLOW wire is used for the wire from the generator or alternator field terminal to the field terminal on the voltage regulator.

DARK GRAY wire is used for navigation lights and wire between the fuse or the fuse and the lights. It is also the color used for the sensor wire from the tachometer sender to the gauge.

BROWN wire is used for leads to the bilge pumps from fuses or switches.

PURPLE wire is used between the ignition switch and the coil and from the ignition switch to electrical instruments through the distribution panel.

DARK BLUE wire is used for instrument and cabin lights. These wires run from switches or fuses to the lights.

LIGHT BLUE wire is used for the sensor wire from the engine oil pressure sender to the oil pressure gauge. The pressure sensor most likely will be three wires — a light blue wire from the sender, a black negative wire to the ground or return and a purple hot wire from the switch or fuse.

TAN wire is used for the wire from the water temperature sender to its gauge.

PINK wire is used for the sensor wire from the fuel tank's sender to the fuel gauge.

GREEN wire is used for bonding wires and normally does not carry current.

The following table lists fuses and circuit breakers on your boat.

BATTERY

Your dealer has installed a battery which supplies power to the DC electrical system. Marine batteries provide high reserve capacity plus cold cranking performance. When the engine is running, the battery is charged automatically.

Batteries produce hydrogen and oxygen gases when being charged. These explosive gases escape through the vent/fill caps and may form an explosive atmosphere around the battery if ventilation is poor. This gas may remain around the battery for several hours after charging. Sparks or flames can ignite the gas and cause an explosion.

⚠ WARNING

POISON! Batteries contain sulfuric acid which can cause severe burns. Avoid contact with skin, eyes or clothing. Wear goggles, rubber gloves and protective apron when working with a battery. In case of contact, flush with water at least 15 minutes. If swallowed, drink large quantities of water or milk. Follow with Milk of Magnesia, beaten egg or vegetable oil. Get medical attention immediately.

DC Wire Number and Color System

Wire #	Color/Stripe	Circuit	Function
1			
2	Blu	Lights, Gauges	Gauges
3	Pur	Ignition	
4-1	Orn/Red	Power Seat - Aft	Aft
42	Wht	Speaker (+), Port Fwd (Cabin)	Port Fwd (Cabin
4-2	Red	Power Seat - Feed	Feed
4-3	Red/Wht	Power Seat - Down	Down
4-4	Red/Yel	Power Seat - Fwd	Forward
4-5	Yel/Red	Power Seat - Up	Up
5-1	Red/Wht	Hatch, Engine - Up	Up
5-2	Yel/Blk	Hatch, Engine - Down	Down
6	Blu/Wht	Stereo, Remote Switching	Remote Switching
7	Pnk	Fuel Sender	(Tag Red for Port, Green for Stbd)
8	Yel/Red	Neutral Start	
9	Red	Spotlight	Power Feed
10	Brn/Blu	Pump, Live well	Live well
11	Brn/Yel	Pump, Fishbox	Fishbox
12	Red	Batt to Helm	Constant Hot
13	Lt Grn/Wht	Trim, Engine - Down	Down
14	Lt Blu/Wht	Trim, Engine - Up	Up
15	Pur/Wht	Trim, Engine - Pwr Feed	Power Feed
16	Brn	Pump, Aft Bilge manual	Aft Bilge Manual
17	Brn/yel	Blower, Engine Room	Engine Room
18	Gry	Lights, Bow navigation	Bow Navigation
19	Gry/Blu	Lights, Sternanchor	Sternanchor
20	Red	Electronics	Power Feed
21	Red	Helm	Power Feed
22	Yel	Grounds	Main
23	Brn/Red	Pump, Aft Bilge Auto	Aft Bilge Auto

DC Wire Number and Color System cont.

24 . . . . .Red . . . . . .Exhaust . . . . . .Cor sa
25 . . . . .Br n/Red . . . . . .Pump, Fwd Bilge Auto . . . . . .Fwd Bilge Auto
26 . . . . .Red . . . . . .Stereo Switched P ower Feed . . . .Switched P ower Feed
27 . . . . .Red/Y el . . . . . .Stereo Memor y . . . . . .Memor y
28 . . . . .T an/Blk . . . . . .Extinguisher . . . . . .Halon System
29 . . . . .DK Gr n . . . . . .Bonds . . . . . .Fuel System
30 . . . . .DK Blu/Red . . . .Lights, Entr y . . . . . .Entr y Lights
31 . . . . .DK Blu . . . . . .Lights, Dinette . . . . . .Dinette Lights
32 . . . . .Red/Pur . . . . . .T rim, Engine - Trailer Power . . . . . .T railer Power
33 . . . . .Or n/Red . . . . . .Depth Sounder . . . . . .P ower Feed
34 . . . . .Red . . . . . .Mercathode . . . . . .P ower Feed
35 . . . . .T an/Yel . . . . . .Alar m, Port Water Temp . . . . . .P ort Water Temp
36 . . . . .T an/Blk . . . . . .Alar m, Stbd W ater Temp . . . . . .Stbd W ater Temp
37 . . . . .Gr n . . . . . .Speak er (+), P ort Aft (Cockpit) . . .P ort Aft (Cockpit)
38 . . . . .Gr n/Blk . . . . . .Speak er (-), P ort Aft (Cockpit) . . . .P ort Aft (Cockpit)
39 . . . . .Pur . . . . . .Speak er (+), Stbd Aft (Cockpit) . . .Stbd Aft (Cockpit)
40 . . . . .Pur/Blk . . . . . .Speak er (-), Stbd Aft (Cockpit) . . .Stbd Aft (Cockpit)
41 . . . . .Dk Blu . . . . . .Lights, Cabin Overhead . . . . . .Cabin Overhead
43 . . . . .Wht/Blk . . . . . .Speak er (-), P ort Fwd (Cabin) . . . .P ort Fwd (Cabin)
44 . . . . .Or n . . . . . .Wiper , Stbd Run . . . . . .Stbd Run
45 . . . . .Or n/Wht . . . . . .Wiper , Washer . . . . . .W asher
46 . . . . .Gr y . . . . . .Speak er (+), Stbd Fwd (Cabin) . . .Stbd Fwd (Cabin)
47 . . . . .Gr y/Blk . . . . . .Speak er (-), Stbd Fwd (Cabin) . . . .Stbd Fwd (Cabin)
48 . . . . .Blu/Wht . . . . . .Lights, Live well . . . . . .Live well
49 . . . . .Blu/Red . . . . . .Lights, Cour tesy . . . . . .Cour tesy
50 . . . . .Y el/Blk . . . . . .Hor n
51 . . . . .Red . . . . . .Receptacle, 12 VDC . . . . . .12 VDC Outlets
52 . . . . .Blu . . . . . .Lights, Step . . . . . .Step
53 . . . . .Blu/Red . . . . . .Wiper P ark . . . . . .P ark Circuit
54 . . . . .Pnk/Blk . . . . . .Engine . . . . . .Cutoff Circuit
55 . . . . .Br n/Blu . . . . . .Pump, F resh Water . . . . . .F resh Water
56 . . . . .Br n/Blk . . . . . .Pump, Show er Sump . . . . . .Show er Sump
57 . . . . .Blu . . . . . .Lights, Docking . . . . . .Docking
58 . . . . .Lt Blu . . . . . .Alar m, Port Oil Pressure . . . . . .P ort Oil Pressure
59 . . . . .Lt Blu/Wht . . . . .Alar m, Stbd Oil Pressure . . . . . .Stbd Oil Pressure
60 . . . . .Red . . . . . .T rim, Tabs - P ower Feed . . . . . .P ower Feed
61 . . . . .Red . . . . . .Ships Ser vice DC . . . . . .A C/DC Panel
62 . . . . .Br n/Red . . . . . .Pump, High W ater Auto . . . . . .High W ater Auto
63 . . . . .Br n . . . . . .Pump, Aft Cabin Bilge Manual . . .Aft Cabin Bilge Manual
64 . . . . .Br n/Red . . . . . .Pump, Aft Cabin Bilge Auto . . . . .Aft Cabin Bilge Auto
65 . . . . .Red . . . . . .Helm Constant Hot . . . . . .F irst Mate
66 . . . . .Red . . . . . .TV Antenna . . . . . .P ower Feed
67 . . . . .Gr y/Wht . . . . . .Lights, Mast Anchor . . . . . .Mast Anchor
68 . . . . .Gr y . . . . . .Lights, Mast Na v . . . . . .Mast Na v
69 . . . . .Or n/Blk . . . . . .CO Detector . . . . . .P ower Feed
70 . . . . .Red . . . . . .Head systems . . . . . .Accessor y Panel Power Feed
71 . . . . .Or n . . . . . .Wiper , Center Run . . . . . .Center Run
72 . . . . .Br n . . . . . .Pump, High W ater Manual . . . . . .High W ater Manual
73 . . . . .Or n/Blu . . . . . .Wiper , P ort Run . . . . . .P ort Run
74 . . . . .Br n/Blk . . . . . .Head systems, V acu-Flush . . . . . .V acu-Flush Power Feed
75 . . . . .Br n/Yel . . . . . .Blow er, Head V ent . . . . . .Head V ent
76 . . . . .Br n/Yel . . . . . .Blow er, Generator . . . . . .Generator
77 . . . . .Br n/Blk . . . . . .Head Systems - Macerator . . . . . .Macerator
78 . . . . .Red . . . . . .Refrigerator , Cabin . . . . . .Cabin
79 . . . . .Red . . . . . .Refrigerator , Cockpit . . . . . .Cockpit

DC Wire Number and Color System cont.

80 .....Br n .....Pump, Fwd Bilge Manual .....Fwd Bilge manual
81 .....Red .....Holding T ank, Indicator P ower Feed ..Indicator P ower Feed
81-1 ....Lt Gr n .....Holding T ank, Indicator Empty ...Indicator Empty
81-2 ....Lt Blu .....Holding T ank, Indicator 1/2 .....Indicator 1/2
81-3 ....Br n .....Holding T ank, Indicator Full .....Indicator Full
82 .....Blu .....Lights, Head .....Head
83 .....Br n/Red .....Pump, Mid Bilge Auto .....Mid Bilge Auto
84 .....Br n .....Pump, Mid Bilge Manual .....Mid Bilge Manual
85 .....Red .....Batter y Parallel .....Solenoid F eed
86 .....Br n/Blu .....Pump, Ra w Water .....Ra w Water
87 .....Blu .....Lights, Galle y .....Galle y
88 .....Blu .....Lights, Spreader .....Spreader
89 .....Coax .....TV System, Antenna to Switch ...Antenna to Switch
90 .....Coax .....TV System, Cable to Switch .....Cable to Switch
91 .....Blu .....Lights, Engine Room .....Engine Room
92 .....Red .....Windlass, P ower Feed .....P ower Feed
93 .....Red/Blu .....Windlass, Anchor Up .....Anchor Up
94 .....Red/Gr n .....Windlass, Anchor Down .....Anchor Down
95 .....Blu .....Lights, Closet .....Closet
96 .....Blu .....Lights, Indirect .....Indirect
97 .....Red .....F reezer .....P ower Feed
98 .....Blu .....Lights, V-Ber th .....V-Ber th
99 .....Red .....Downrigger s .....P ower Feed
100
101
102
103 ....Y el/Wht .....Generator , Exhaust High T emp ...Exhaust High T emp
104
105 .....Coax .....TV System, A/B Switch to Fwd TV ...A/B Switch to Fwd TV
106 .....Coax .....TV System, A/B Switch to Aft TV ...A/B Switch to Aft TV
107
108
109 ....Blu/Wht .....Lights, T -Top Overhead .....T -Top Overhead
110 ....Pur .....Generator , Run Light .....Run Light
111 ....Y el ..... Generator, Remote Star t/Stop Ground ..Remote Star t/Stop Ground
112 ....Red .....Generator , Remote Star t .....Remote Star t
113 ....Red .....Generator , Remote Stop .....Remote Stop
114 ....Blk or Gr n .....Electric T ab Up .....Lenco / K-Plane T ab
115 ....Wht or Blu .....Electric T ab Down .....Lenco / K-Plane T ab
116 ....Blu .....T rim, Tabs .....BENNET UP
117 ....Y el .....T rim, Tabs .....BENNET DO WN
118 ....Red .....T rim, Tabs .....BENNET PORT
119 ....Gr n .....T rim, Tabs .....BENNET STBD
120
121 ....Wht .....W ater Tank .....Sender
122 ....Red .....Batter y Charger, Port Batter y ....P ort Batter y
123 ....Red ..... Batter y Charger, Stbd/House Batter y ..Stbd/House Batter y
124 ....Red .....Batter y Charger, Gen Batter y ....Gen Batter y
125
126 ....T an .....Alar m, Port Eng Exhaust T emp ...P ort Eng Exhaust T emp
127 ....T an/Or n .....Alar m, Stbd Eng Exhaust T emp ...Stbd Eng Exhaust T emp
128
129
130 ....22/4 .....T elephone
131 ....Blu .....Hatch, Fwd Storage .....Fwd Storage

DC Wire Number and Color System cont.

132 . . . .Yellow . . . . . .Hatch, Fwd Storage . . . . . .Fwd Storage
133 . . . .Green . . . . . .Hatch, Fwd Storage . . . . . .Fwd Storage
134 . . . .Orange . . . . . .Speaker (+), Cockpit Subwoofer . .Cockpit Subwoofer
135 . . . .Orange/Blk . . . . . .Speaker (-), Cockpit Subwoofer . . .Cockpit Subwoofer
136 . . . .Red . . . . . .Isolator, Alternator out to Isolator . .Alternator out to Isolator
137 . . . .Red/Blk . . . . . .Isolator, To Port Battery . . . . . .To Port Battery
138 . . . .Red/Yellow . . . . . .Isolator, To Stbd/House Battery . .To Stbd/House Battery
139
140

All GROUND wires will be YELLOW. They'll be identified by the circuit number with a "G" suffix.
Example: Cabin Lights: wire # 41 Dk Blue (12V), wire # 41G Yellow (ground)

All POWER FEED wires will have an "A" Suffix.
Example: Cabin Light power feed wire #41A

All BRANCH wires will be numbered with a "numerical" suffix.
Example: Cabin Light wire from circuit breaker to first junction will be #41.
From the first junction to the first light will be # 41-1
From the first junction to the second light will be # 41-2

AC Wire Number System

Wire #	Function
01AC	. . .Not Used
02AC	. . .Not Used
03AC	. . .Not Used
04AC	. . .Water Heater
05AC	. . .Battery Charger
06AC	. . .Forward TV
08AC	. . .Aft TV
09AC	. . .Cabin Refrigerator
10AC	. . .Coffee Maker
11AC	. . .Microwave
12AC	. . .Cockpit Icemaker
13AC	. . .Outlet, Galley, GFCI
14AC	. . .Outlet, Head, GFCI
15AC	. . .Not Used
16AC	. . .Not Used
17AC	. . .Outlet, Port
18AC	. . .Outlet, Stbd
19AC	. . .Outlet, V-Berth, Port
20AC	. . .Outlet, V-Berth, Stbd
21AC	. . .Outlet, Dinette
22AC	. . .Not Used

Wire #	Function
23AC	. . .Not Used
24AC	. . .Generator Line 1
25AC	. . .Generator Line 2
26AC	Shore Power Line 1
27AC	. . .Shore Power Line 2
28AC	. . .Not Used
29AC	. . .Not Used
30AC	. . .Not Used
31AC	. . .Not Used
32AC	. . .Controller power, Dual Air Cond
33AC	. . .Galley Waterheater
34AC	. . .Air Cond, Fwd
35AC	. . .Not Used
36AC	. . .Air Cond, Aft
37AC	. . .Not Used
38AC	. . .Not Used
39AC	. . .Not Used
40AC	. . .Central Vacuum
41AC	. . .Not Used
42AC	. . .Not Used
43AC	. . .Water Pump, Aft A/C
44AC	. . .Water Pump, Fwd A/C

BATTERY CHARGING SYSTEM

The boat's batteries are normally charged whenever the engines are running. If you are docked for an extended period of time, operating DC devices and equipment will drain the power from the batteries. Unless the batteries are kept charged, they may not have enough power to start the engines when you need them.

If your boat is equipped with a battery charger, it will automatically charge the batteries when your boat is connected to shore power or when the generator is running. In either situation, the BATTERY CHARGER breaker at the AC CONTROL panel must be switched to ON, to charge the batteries.

Leaving the battery charger switch on whenever AC power is available is a good idea. It will keep the batteries fully charged. After the batteries are recharged, it provides a maintenance or trickle charge as needed.

ALTERNATORS

The engines alternators will recharge the batteries while the engines are running. Voltage regulators control the rate of charge by sensing voltage variations and increase or decrease output accordingly.

OVERLOAD PROTECTION

The engine is equipped with a circuit breaker to protect the engine wiring harness and instrumentation power leads. If an electrical overload occurs, a circuit breaker will open and interrupt current flow when the circuit draw exceeds the rated amperage. Refer to your engine owner's manual for location and resetting procedure.

SWITCHES

DUAL BATTERY SWITCH

⚠ CAUTION

Do not turn dual battery switch to OFF setting while engine is running; alternator and wiring damage could occur.

The dual battery switch enables DC power to be used from one or two batteries. The dual battery switch controls power to the engine and all 12-volt electrical equipment, except the automatic bilge pump. The dual battery switch settings available are OFF, 1, 2 and ALL.

IMPORTANT: The dual battery switch should be in the OFF setting when not in use and especially while the boat is unattended. While in the OFF setting, only the automatic bilge pump and stereo presets are supplied with DC power. All other electrical items are OFF.

The description and function for each of the settings on the dual battery switch is described below:

- OFF: All 12-volt power to boat is shut OFF except for the automatic bilge pump and stereo presets and corrosion controller (if equipped). When boat is unattended for extended periods of time, turn the dual battery switch to the OFF position.

- Setting one (1) will use battery #1 to power engine and all 12-volt equipment. Battery #2 is isolated and remains in reserve. Battery #1 is charged by the alternator.

- Setting two (2) uses battery #2. Except for bilge pump, battery #1 is isolated and remains in reserve. Battery #2 is charged by the alternator.

- Setting ALL will use both batteries. Both batteries are used by the engine and all 12-volt equipment and are charged by the alternator when the engine is running.

We recommend using only one battery at a time by using the number one (1) or two (2) settings. Avoid using the ALL setting unless a single battery is not sufficient to start the engine.

NOTE: Rotating your battery usage will increase battery longevity.

Some twin engine models will have two dual battery switches, one for each engine and battery. The port side switch should be in position number one (1) and the starboard side switch should be in position number two (2) when starting the engines.

If you can't start an engine because the battery is low, try starting the other engine. Once the second engine is running, turn both battery switches to all, and then start the first engine using both batteries. Once the first engine is running, return both battery switches to the preferred settings.

HELM SWITCHES

The number and type of switches and breakers at the helm varies by model as do the identification tags and the ratings of the breakers. Switches and breakers are listed below in alphabetical order. Some boats will not have all of the switches listed.

Switch and Function

ACCY: Supplies power to any customer supplied equipment or 12-Volt outlet.

ANCHOR WINCH: Raises or drops anchor (3-position toggle switch, default to off)

AFT BILGE: Operates aft bilge pump

ANCHOR LIGHTS: Turn anchor lights on or off

BILGE: Operate bilge pump(s) manually

COCKPIT LIGHTS: Turn cockpit lights on or off

COURTESY: Turn courtesy lights on or off

ENGINE ROOM LIGHTS: Turn lights in engine room on or off

FORWARD BILGE: Operate forward bilge pump

FRESH WATER PUMP: Supplies power to the fresh water system pump. Keep this switch on to keep the system pressurized.

FISHBOX PUMPOUT: Activates pump to remove water and other small particles from the fishbox

HORN: Operate horn

LIVEWELL: Operates live well pump

LIVEWELL LIGHTS: Controls lighting in same livewells

NAVIGATION/ANCHOR LIGHTS: Turn navigation or anchor lights on or off (3-position toggle switch defaults to neutral center position)

PANEL LIGHTS: Turn helm panel lights on or off

RAW WATER: Operates your boat's raw water pump

SPREADER LIGHTS: Turns lights on radar arch on or off

TRAILER: Raises stern drive all the way up when boat is being trailered or beached. Do not use this switch when engine is running.

WASTE DISCHARGE MACERATOR: Activates pump to empty MSD holding tank overboard.

WINDLASS: Operates your boat's power windlass, if so equipped (3-position toggle switch defaults to neutral center position)

CABIN LIGHTING

The lights in your boat's cabin are part of the 12V DC power system. Each fixture has a switch at the helm and a circuit breaker next to it. If your boat has a main breaker, it will be located next to the dual battery switch in the aft transom access.

ACCESSORY PLUG

On some models, an accessory plug outlet has been provided at the helm. Turn the battery switch on to supply power to this outlet. On some models the ACCY switch controls power to this outlet.

AC ELECTRICAL SYSTEM

Some models have been equipped with an AC electrical system, which meets or exceeds national standards at the time it was built. To work, your boat's AC system must be connected to a shore power supply or the generator.

Shore power service is available in 110 volt or 220 volt configurations. In North American and Pacific Rim countries, the standard power supply is 110 V, 60 hertz (Hz). However, in some European countries, the standard power supply is 220 V, 50 Hz.

The main AC breaker(s) on your boat turns your entire AC system on and off, allowing you to check for proper voltage and polarity immediately after a shore power connection has been made and before individual circuits are enabled. Most panels also have a transfer switch which allows you to operate some functions on the second load panel from the first load panel.

TRANSFER SWITCH

NOTE: Only boats equipped with an air conditioner and/or a generator will have a transfer switch.

The transfer switch can be used to temporarily run equipment from AC Load Group 2 off of the

shore power cord for AC Load Group 1. With a shore power cord attached to AC power hookup #1 flip the transfer switch to be able to run selected equipment from Load Group 2. Be careful not to exceed 30 amps on one power cord.

NOTE: Exceeding 30 amps on one power cord will cause the main service breaker to trip. If the main breaker trips, shut off equipment to reduce the load before resetting the main service breaker.

SHORE POWER

⚠ CAUTION

To prevent damage to electrical system, never operate shore power system at less than 105 volts.

Your boat has a single male receptacle outside on the deck for shore power connection (two receptacles if you have air conditioning).

Before you connect your boat to shore power, turn off the main cabin circuit breakers. Attach the shore power cord to the boat first and turn clockwise to lock. Thread the locking ring on the cord to secure it to the receptacle. Connecting the cord to the boat first will prevent dropping a "hot" cord into the water. (When you leave the dock, remove the cord from the dockside shore outlet first.) If you have any questions, contact your dealer.

Make sure the dockside shore power breaker is OFF; then plug in the cord. Turn the dockside shore power breaker on. Immediately check the polarity lights on the main electrical panel in the boat. If the REVERSED POLARITY light on the panel illuminates, **do not turn on the main cabin breaker**. Turn off the dockside shore power breaker and disconnect your shore power cord. Inform the marina manager of the problem. If you have any questions, contact your dealer.

Important: Some equipment will not work or may be damaged if polarity is reversed. Damage caused by reversed polarity is not covered under your warranty. Be sure polarity is correct when you connect your boat to shore power.

An AC circuit may overload if the current draw (amperage) of the accessories in use exceeds the capacity of the load group. For each load group, an AC amp indicator in the main electrical panel indicates the amperage draw. If a circuit overloads, turning off one or more accessories may be necessary while you operate another.

GENERATOR

⚠ DANGER

Generator or hull exhaust from other vessels while either docked or anchored can emit poisonous carbon monoxide gas and cause excessive accumulation within the cabin and cockpit areas of your boat. See Figure 2.7. Be alert for generator exhaust from other vessels alongside your boat.

⚠ WARNING

Turn on the bilge blower for at least 5 minutes before starting an inboard engine or generator, to eliminate gasoline fumes in the bilge. Open the bilge hatch cover during that time and smell for fumes. DO NOT start engine or generator if gasoline fumes are present. Do not operate blower while fueling boat.

The optional onboard generator provides AC power to your boat's electrical system. If your boat has a generator, it is mounted in the engine compartment.

Accidental starting of the generator can cause severe personal injury or death. Stop generator and disable by disconnecting battery cables (negative [–] cable first) when maintenance or repairs are made to the engine, controls, or generator. Do not disconnect cables if gas fumes are present.

Note: Follow all generator instructions in the operator's manual. The manual includes detailed information on specifications and procedures for safe operation, maintenance, and winterizing. It also explains how you can obtain service for the generator, if required. The manual is in your owner's packet.

Follow these procedures to operate the generator:

1. Run bilge blower for five minutes before starting generator.

2. Make sure sea water intake valve (seacock) for the generator is open. Seacock must remain open at all times when generator is operating. Seawater strainer must be free of debris to prevent clogging intake. Inspect seawater strainer frequently.

Note: Wellcraft recommends not using the generator when underway. When underway and not using the generator, the seacock should be closed.

3. Press or toggle START switch on main panel in cabin. When starting generator, never operate starter for more than 30 seconds. Wait at least 30 seconds before each attempted start.

   On the generator in the engine compartment are a choke and starter switch. If starting the generator from the cabin is difficult, use the choke and starter on the generator.

4. Look over side of boat and check for water flowing from discharge port. If water is not flowing, stop the generator. Check for the following: blocked water intake, air in line, clogged sea strainer, or closed sea cock that should be open. Correct the problem before restarting the generator.

   NOTE: You must turn on your battery charger once the generator is running. This will keep your batteries fully charged.

5. Before stopping, turn off all AC powered components and run generator at no load for three to five minutes to allow lubricating oil and engine cooling water to carry heat away from combustion chamber.

GFCI OUTLET

An AC outlet in the galley or head compartment has been equipped with ground fault circuit interrupter. This outlet has been designed to protect your passengers and equipment from the damage caused by ground faults. There are two buttons in between the two receptacles on the outlet. To test the ground fault interrupter, press the test button. If the reset button pops out, the outlet is working properly. If the outlet is not working properly, have your electrical system checked by a qualified electrician.

You will have to press the reset button back in for your AC electrical equipment to work. If the reset button pops out at any time other than when you are testing the system, you have a ground fault and should have your system checked as soon as possible.

MAIN ELECTRICAL PANEL

Some models are equipped with a main electrical panel in the cabin or companionway. The location varies by boat model. This panel is the electrical heart of your boat. At this panel are the switches which supply power to the components which operate using AC and DC power.

TROUBLESHOOTING CHART

DC ELECTRICAL SYSTEM

PROBLEM	CAUSE	SOLUTION
12V equipment not working	Battery selector switch turned to OFF Weak or dead battery	Switch selector switch ON for port (1) or starboard (2) battery. Recharge battery.
Battery not charging (engine running)	Engine alternator belt loose	Tighten belt.
Battery not holding a charge	Bad battery	Replace battery.
12V device not working	Circuit breaker for device is OFF Weak or dead battery Faulty electrical connection Weak or dead battery Light bulb burned out	Switch breaker to ON. Change battery selector switch position; recharge battery. Check 12V connections. Tighten or repair as needed. Change battery selector switch position; recharge battery. Replace bulb.

AC ELECTRICAL SYSTEM

PROBLEM	CAUSE	SOLUTION
No AC power	Main breaker(s) in engine compartment tripped or off Breaker(s) at AC CONTROL panel tripped or off Shore power cord not connected Loose or disconnected wire	Turn breakers on or reset. Turn breakers on or reset. Check cord; plug in if necessary. Tighten connections. See your dealer.
No power to AC devices	Breaker(s) at AC CONTROL panel tripped or off Shore power cord not connected|	Turn breakers on or reset. Check cord; plug in if necessary.

AC ELECTRICAL SYSTEM CONT'D

PROBLEM	CAUSE	SOLUTION
No power to AC devices (Continued)	Loose or disconnected wire	Tighten connections. See your dealer.
Inadequate power to AC devices (generator running)	Electrical demand greater than generator output	Switch off devices and equipment not needed.
No power at AC outlets	Outlet breakers in AC CONTROL panel OFF Ground fault interrupter tripped	Switch breakers to ON. Reset button on outlet and test.

FRESH WATER SYSTEM

The fresh water system consists of a water tank, pump, water heater, and a distribution system. Fresh water is supplied to various areas including the galley, the head, and a transom shower. Some models have male hose connections for cockpit and foredeck washdown. Check with your dealer if you have a question about your water system.

The tank is filled through a deck plate. The location of the fresh water fill and vent deck plate will vary by model. The fill plate will be labeled WATER and is on a deck surface.

IMPORTANT: Fill the tank with only fresh water. Refilling the tank often will help keep it a source of fresh and clean drinking water.

The fresh water pump supplies water under pressure to the system when the dockside water supply is not connected. The FRESH WATER PUMP breaker switch on the DC CONTROL panel controls its operation.

Before entering the pump, the water passes through a filter to capture any contaminants. when the breaker is switch to ON, the pump runs until the hot and cold water systems are pressurized. An automatic pressure switch shuts the pump off until the pressure drops to a preset level (for example, a pressure drop caused by opening a faucet). The pump will then run again until the system is pressurized and turn itself off.

If the pump runs from time to time even though no water is being used, a leak in a water line is a likely cause. Check all lines for a leak and repair.

IMPORTANT: Operate the fresh water pump only when there is water in the tank. Running the pump dry will damage the impeller. The pump will not automatically turn off when the tank is empty. If the breaker switch is left on when the tank is empty, the pump may overheat.

SANITIZING FRESH WATER SYSTEM

The fresh water system should be sanitized before initial use, after winter storage or when system has not been used for extended periods of time.

NOTE: The water tank must be empty before beginning the sanitizing process.

1. In an appropriate size bucket, make a solution of 1-1/4 cups (10 oz.) of household bleach and 5 gallons (19 liters) of fresh water.

2. Dump water into water tank and allow treated water solution to remain in water tank for 3 to 4 hours.

3. Use faucet pump to bleed air from the fresh water line.

4. Drain treated water solution from lines and empty tank.

5. Flush entire system with fresh water.

IMPORTANT: Thoroughly flush entire system with fresh water after each sanitizing process.

If fresh water has an excessive chlorine taste after sanitizing the system:

1. Pour a solution of 1 quart (approx. 1 liter) of vinegar and 5 gallons (19 liters) of fresh water into tank.

2. Allow solution to stand in tank for several days.

3. Drain entire system and flush with fresh water.

IMPORTANT: Thoroughly flush entire system with fresh water after treatment.

INITIAL START-UP

1. Sanitize the system as described above.

2. Fill the fresh water tank with drinking water.

3. Operate the faucet until a steady flow of water is visible.

4. Refill the tank to capacity if necessary.

DOCKSIDE WATER HOOKUP

As an alternative to the fresh water tank, the system can be connected to a dockside water supply. Because the water enters the boat under pressure, it bypasses the fresh water tank, filter and pump. The pump should be shut off when the system is connected to dockside water.

NOTE: Using dockside water does not replenish water supply in your tank. The tank can only be filled at the fresh water fill plate.

The fresh water system operates at a lower pressure than that supplied from a dockside water source. Unless the pressure is regulated, dockside water may rupture lines or leak through gaskets. Monitor the water system carefully the first time you hook it up to the dockside water system because the system is connected to an unlimited supply of water. The dockside water inlet on your boat may be equipped with a pressure regulator to reduce the pressure of the water supplied to your boat's system. Check with your dealer if you have a question.

⚠ CAUTION

NEVER leave the boat unattended while using the dockside water hookup. If a line ruptures or other major leak develops, excess water in the bilge could damage the engines or other boat components, or – worse yet – the excess water could sink your boat. Turn the water supply off before leaving.

To connect dockside water:

1. Turn the FRESH WATER PUMP switch off.

⚠ WARNING

Before connecting to any water fitting be sure the water is potable and suitable for human consumption. Also, a special sanitary drinking water hose is required for the potable water connection. Do not use a common garden hose for drinking water.

2. Remove the threaded plug from the female swivel hose connector of the water inlet fitting. Be sure to clean both ends and flush the hose before connecting. Foreign matter may damage the pressure regulator.

3. Attach the proper sanitary drinking water hose to the water inlet fitting.

4. Before connecting the dockside water outlet, open the valve fully to flush away any rust particles which may be present.

5. Connect the hose to the dockside water outlet.

WATER HEATER

Your boat is equipped with a water heater to provide hot water to the fresh water system. A breaker marked WATER HEATER on the AC control panel controls the operation of the heater. The heater will not operate using DC power. Some models may have an adjustable thermostat to regulate hot water temperature. Check with your dealer for the capacity of the water heater.

IMPORTANT: Before turning the water heater circuit breaker ON, make sure the water heater

is full of water. Turning on power to an empty heater could damage the heating elements and make the water heater useless.

Follow these procedures to use the water heater:

1. Make sure the water heater is full of water by opening a hot water faucet until a steady stream of water flows out of the faucet and all air is removed from the hot water lines.
2. With the generator running or shore power connected to your boat, switch on the WATER HEATER circuit breaker at the AC CONTROL panel.
3. Wait for the water in the tank to heat up; then use as you would at home.

WATER SYSTEM TROUBLESHOOTING

PROBLEM	CAUSE	Solution
Air in system	Water tank empty	Fill tank. With pump on, bleed air from lines by opening faucets until water flows out.
Fresh water pump cycles on and off	Leak in water system	Locate leak and repair.
No water at shower or sinks with faucets on	FRESH WATER PUMP breaker off	Switch breaker to ON.
	Water tank empty	Fill tank.
	Blocked or pinched water lines	Clear obstruction or straighten line.
	Loose electrical connections	Check connections; tighten as needed.
		See your dealer for service.
	Defective pump	See your dealer for service.
Low water pressure at all sinks and shower	Defective pump	See your dealer for service.
Low water pressure at one sink	Pinched water line	Straighten line.
Raw water pump not pumping water	Tripped circuit breaker	Reset if tripped.
	No water supply	Check for clogged pump. Remove material as needed.
		Check for clogged thru-hull fitting. Clean fitting.
	Loose electrical connections	Check and tighten connections. Make sure wires are not broken.

WASTE SYSTEMS

PORTA–POTTI

The marine sanitation device (MSD), or head, installed on your boat is a marine toilet.

This portable toilet provides simple operation and convenient disposal of waste. The waste is transported off the boat by removing the toilet's holding tank.

HOLDING TANK

Waste may be stored in a holding tank which is separate from the head. Use a dockside pumpout station to empty the holding tank. Make sure the pumpout station hose is inserted into the WASTE deck plate labeled waste which is usually located amidships. Follow instructions at the station for pumping out your holding tank.

⚠ WARNING

Waste in the holding tank can form methane, an explosive gas. Use suitable precautions when any maintenance is done to the sanitary system.

VACUFLUSH® HEAD

The VacuFlush toilet operates differently than other marine toilets. **Figure 4.1** is a schematic of a typical VacuFlush system. This system uses a little more than a pint of water per flush in addition to a simple vacuum. The toilet is connected to a pressurized fresh water system. **Fresh water is the key to an odor free head compartment.** VacuFlush toilets are equipped with an integral vacuum breaker which prevents the possible contamination of the water supply. Make sure all guests understand the operation of the VacuFlush system and that the instruction label is in plain sight and easy to read. Refer to your VacuFlush manual for more information on the operation of this system.

OVERBOARD DISCHARGE

IMPORTANT: It is illegal to discharge waste from your marine sanitary device into the water in most areas. It is your responsibility to be aware of and adhere to all local laws concerning waste discharge. Consult with the Coast Guard, local marina or your dealer for additional information.

If your boat is equipped with overboard discharge, waste can be pumped directly overboard by using the switch at the helm.

AUTOMATIC BILGE PUMP

The automatic bilge pump with manual override removes water from the bilge area. Rising water activates a float switch to start the bilge pump. When the water reaches a preset low level, the float switch shuts the pump off.

If for some reason the pump fails to start, check the fuse and wiring connections. If the

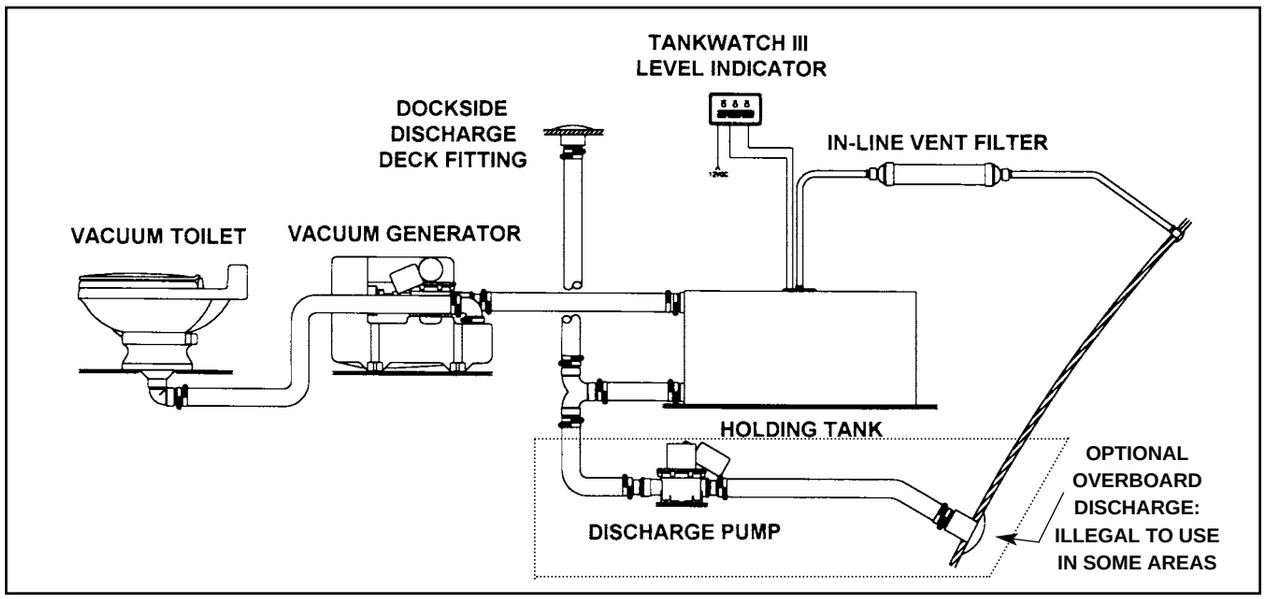

FIGURE 4.1 TYPICAL VACUFLUSH SYSTEM

pump motor runs but no water is discharged, it may be clogged. Keep the area around the switch and the pump free of debris. If there is no visible debris clogging the pump or blocking the float switch and water is still not being removed, inspect the discharge hose for kinks or obstruction.

If oil is spilled in the bilge, do not run the pump. Keep the oil from spreading in the bilge and properly dispose of the oil on shore.

The bilge pumps on some models may not have automatic float switches. You must check the water level in the bilge and operate the pump manually. Check with your dealer if you have any questions.

SEACOCKS

Your boat is equipped with seacocks to shut off openings below the water line in emergencies or when removing various components for repair. Close seacocks when your boat will be unattended for extended periods of time. Open and close seacocks once a month to prevent difficult operation.

A sea strainer installed on the intake side of the water cooling system protects the system from clogging and provides and easy way to remove occasional debris **(Figure 4.2)**. Periodic inspection and removal of debris is essential for effective operation, but the frequency will vary depending on the amount of use and local conditions.

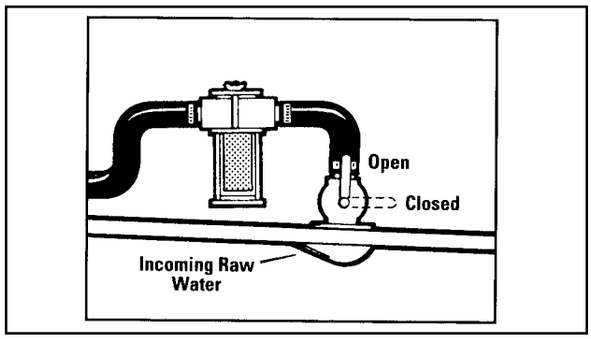

FIGURE 4.2 SEA COCK AND SEA STRAINER

RAW WATER SYSTEM

RAW WATER PUMP

The raw water pump supplies sea water to the livewell or raw water washdown in the cockpit **(Figure 4.3)**. The raw water pump switch is located at the helm. The pump location will vary by model. If your boat is equipped with a raw water washdown and a livewell, a Y–valve on the aft transom wall controls the flow of water to the raw water washdown or the live well. On a few models, the Y–valve will be at the helm.

LIVEWELL

The livewell circulates and aerates raw water to keep your bait alive until your fishing trip is over. Turn the raw water pump on to fill the live well. Once the water reaches the top of the stand pipe, it will flow out of the pipe and drain overboard. The water level will be maintained at the height of the stand pipe. Running the pump continuously may drain your boat's battery. Occasional use of

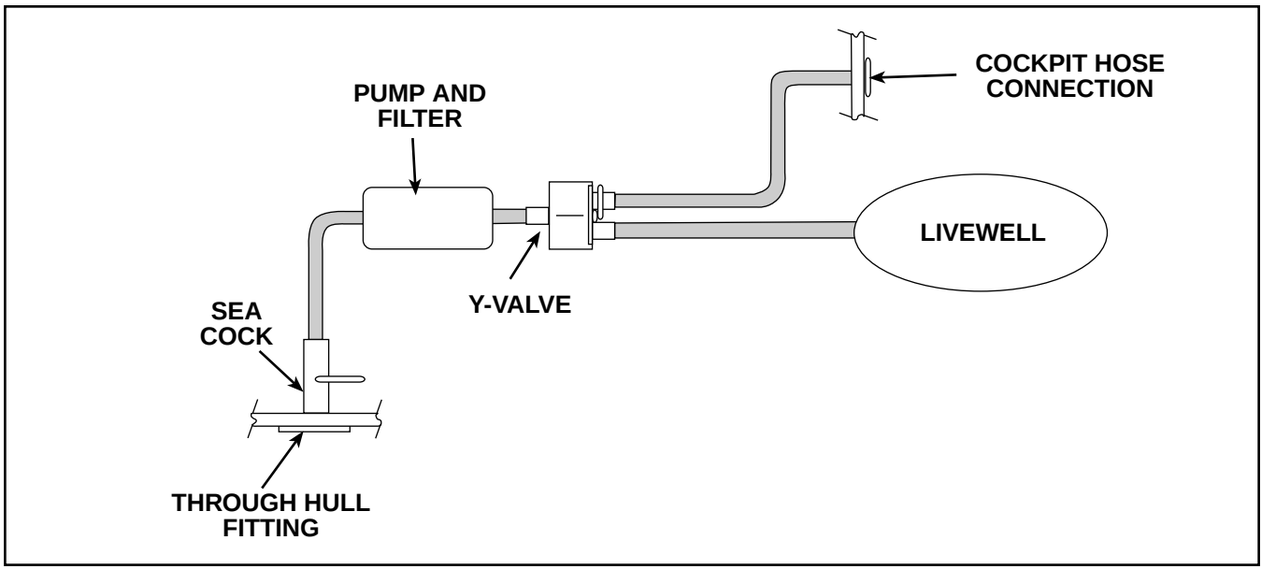

FIGURE 4.3 TYPICAL RAW WATER SYSTEM

the pump will keep the water fresh. To drain the livewell, remove the stand pipe.

Your boat may have a waterproof light in the livewell. This light is controlled by a switch at the helm labeled LIVEWELL LIGHT or COURTESY LIGHTS, depending on boat model.

RAW WATER WASHDOWN

If your boat has raw water washdown, a Y–valve channels water flow to the live well or to a male hose connector provided in the cockpit. The location will vary by model. A hose can be connected to use raw water to wash down the cockpit. If the raw water hose nozzle is closed, the pump will stop working when the hose is pressurized and start working again when the nozzle is opened.

BILGE BLOWER

⚠ WARNING

Turn on the bilge blower for at least 5 minutes before starting an inboard engine or generator, to eliminate gasoline fumes in the bilge. Open the bilge hatch cover during that time and smell for fumes. DO NOT start engine or generator if gasoline fumes are present. Do not operate blower while fueling boat.

The bilge blower forces fumes out of the engine compartment area and circulates fresh air drawn in through the deck vents. *The deck vents must be kept clear and open at all times.* The blower must run at least five minutes before starting an inboard engine or generator. It must also be running during start-up and operation below cruising speed. At cruising speed, air flows into and out of engine compartment because of the boat's speed and the shape and placement of the vents.

ALCOHOL STOVE

Your boat may be equipped with a single burner alcohol stove. Refer to the stove owner's manual for details about using this appliance safely.

⚠ WARNING

Fueling an ignited burner can cause it to flare up. Do not light burner unless flame is extinguished and burner is cool.

⚠ WARNING

Use fuel approved by the manufacturer. Always provide adequate ventilation when using an open flame. Do not use stove near fuel fill or fuel vent. Alcohol flame is invisible in sunlight.

NAVIGATION EQUIPMENT

COMPASS

Your boat's compass is invaluable in determining your position and course. A qualified technician must adjust the compass for errors caused by environmental interference. Since a compass can seldom be corrected to zero deviation on all headings, the technician will provide you with a deviation card showing the correction to be applied in navigational connections. **Keep this card at the helm at all times.**

HORN

A horn has been installed on your boat. Flip the switch marked HORN to operate the horn.

FUEL SYSTEM

Your boat's fuel system meets or exceeds the Federal requirements of the U.S. Coast Guard at the time of manufacture. We have inspected and pressure tested the fuel system in accordance with current regulations. In addition, every fuel tank must pass rigid tests and inspections by the tank manufacturer.

Before you take delivery of your boat, check that your dealer completes a full inspection of the entire fuel system. You should also inspect the entire system at least once a year.

1. Gas Deck Fill: All our boats have an internal gas tank equipped with a deck fill plate labeled GAS or GASOLINE. Be sure to use the proper grade fuel as specified in your engine owner's manual. See Section 7 for fueling instructions and recommendations.

2. Gas Tank Vent: The gas tank is vented overboard. While you are filling the tank, gasoline entering the tank pushes air in the tank out through the vent. Be careful when the tank is being filled, gas will be ejected through the vent when the tank is full or nearly full.

3. Anti-Siphon Valve: Fuel pickup lines for the engine have an anti-siphon valve at the point where the line attaches to the fuel tank. The valve prevents gasoline from siphoning out of the tank if the fuel line separates.

4. Fuel Filter: The fuel filter supplied by the engine manufacturer is installed on or near the engine. Replace the filter frequently to maintain an adequate supply of clean gasoline to the engine.

5. Fuel Tank: The internal fuel tank fittings are accessible through the engine compartment or below removable deck plates. The tank is equipped with a gas fill line, gas vent line, sending unit and engine fuel pickup as shown.

Some models are equipped with an auxiliary fuel tank. This tank will have its own deck fill plate. The fuel manifold valves in the bilge area control the supply of fuel to the engine(s). Ask your dealer to show you the proper settings for the valves.

WATER SEPARATING FUEL FILTER

If your boat is equipped with a water separating fuel filter, the service interval will depend on the quality of fuel used. Have your dealer locate this equipment for you. Inspect and empty the glass bowl on the bottom of the filter every two months.

ENGINE MULTI–FUNCTION ALARM GAUGE

This gauge **(shown as Figure 4.4)** indicates engine operating conditions and warns you when to check your engine. When the CHECK ENGINE indicator lights, you should have your engine checked by your dealer. When the LOW OIL indicator lights, the oil level in the oil reservoir is low. If the NO OIL or WATER TEMP indicator lights, stop your engine immediately and correct the problem.

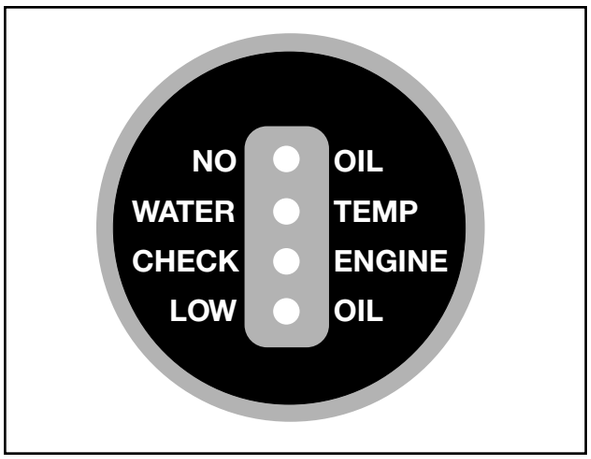

FIGURE 4.4 ENGINE MULTI FUNCTION ALARM GAUGE

ENGINE EXHAUST SYSTEM

The engine exhaust system removes harmful gas created by the engine during combustion. Inspect the system for leaks before each use of the boat. Make sure all hose clamps and connections are tight and there are no cracks in any exhaust system component that would allow carbon monoxide gases to escape. Refer to the engine owner's manual for more information.

REFRIGERATOR

The refrigerator supplied with your boat operates off DC or AC power through the main electrical panel. Switch the breakers for the refrigerator to ON to power the refrigerator. When AC power is available and both DC and AC refrigerator breakers are on, the refrigerator will automatically use the AC power.

IMPORTANT: The refrigerator can drain the power from a battery in a short time, particularly if other devices are powered from the DC power supply. Operate the engines from time to time to recharge the batteries if an AC power supply is not available. See the refrigerator manual for more information.

AIR CONDITIONING SYSTEM

Your boat may have an optional air conditioning system. **Figure 4.5** shows the components of a typical air conditioning system.

The air conditioning pump draws in sea water through a seacock in the bilge when the air conditioner is running. It discharges this through a thru-hull fitting above the water line. The locator drawings in Section 3 show the location of air conditioning system components on your boat. Air conditioning units are controlled through breaker switches at the AC control panel. When using an air conditioner, its breaker switch must be on.

When you operate the air conditioner :

1. Open the air conditioner seacock. The valve is open when the handle is in line with the hose.

2. Check the sea strainer next to the seacock. Clean it if necessary to assure a steady flow of water to the unit.

3. Set the thermostat to the temperature desired.

IMPORTANT: Be sure to close air conditioner seacock when air conditioner is not in use.

The heat pump on the air conditioner can be used to heat the cabin. The heat pump runs in reverse and extracts heat from sea water to heat your boat. Using the heat pump feature when the sea water temperature is below 40° can damage the air conditioning system.

Refer to the manual furnished with the air conditioning unit for more detailed information regarding its operation.

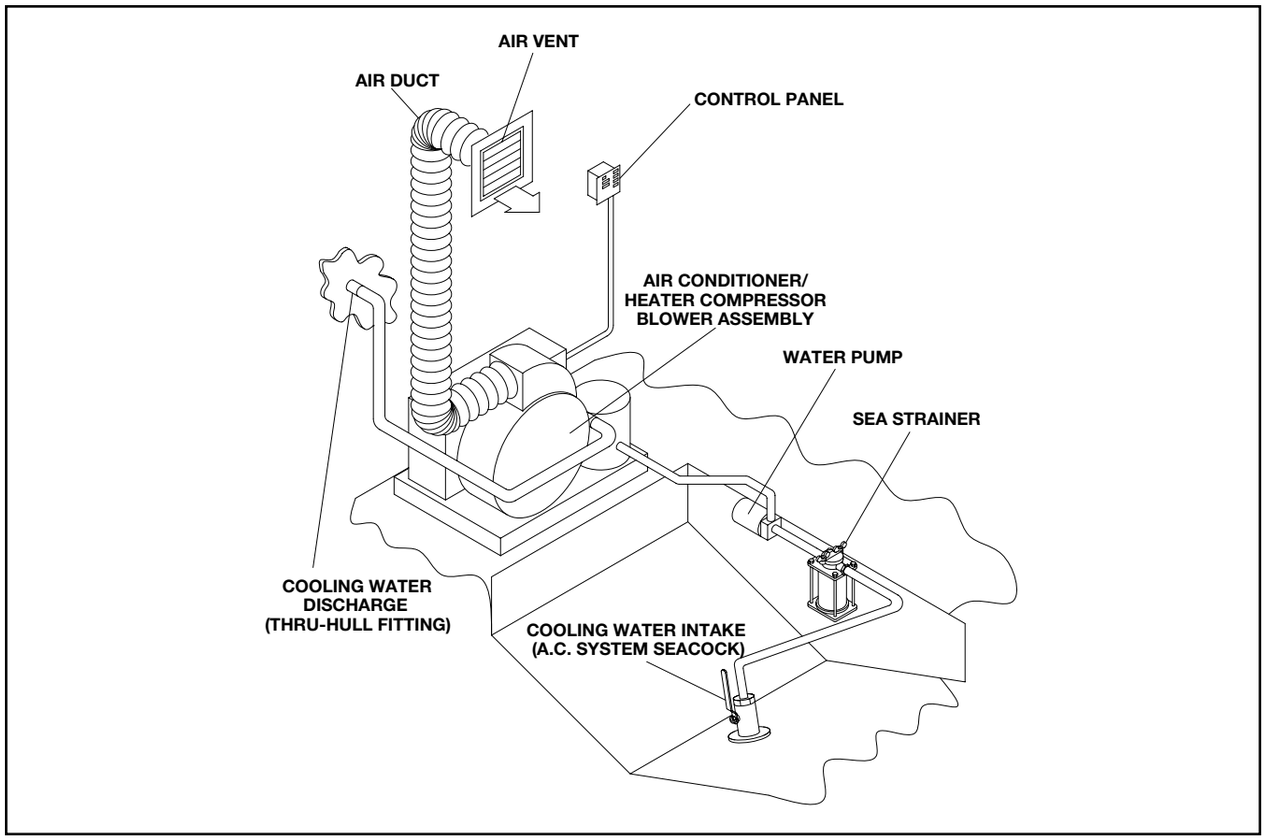

FIGURE 4.5 TYPICAL AIR CONDITIONING SYSTEM

Controls and Indicators – 5

INSTRUMENTATION

A full set of instruments at the helm of your boat shows what is taking place within your engine. Consult your dealer about the normal readings of the gauges upon delivery of your boat. This will provide you with a reference point for the life of the engine. Keep in mind some gauges tend to fluctuate which is not uncommon. But when operating your boat, investigate all gauges that show a greater or less than normal reading.

NOTE: Your boat may not have all the instruments discussed in this section. The ranges of your gauges may also vary from the readings listed or shown in the illustrations.

TACHOMETER

The tachometer displays the number of revolutions per minute (RPM) that the engine is running. The gauge displays engine speed in increments of 200 RPM. The tachometer will show the RPM's under all engine operating conditions. Consult with your dealer if you require additional information. Do not exceed engine manufacturer's recommendations.

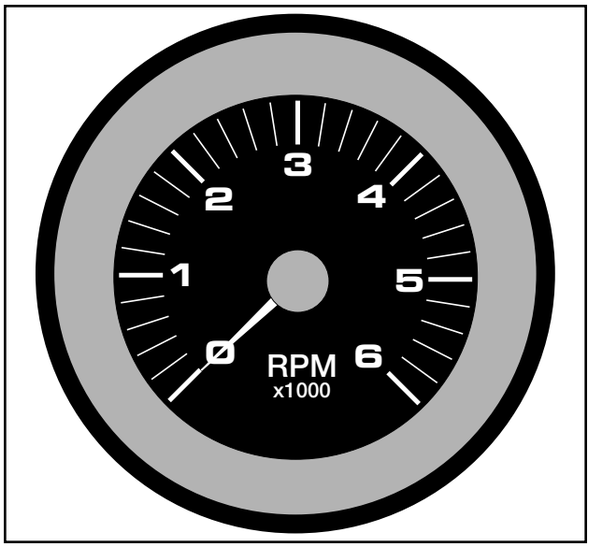

SPEEDOMETER

The speedometer measures boat speed in miles per hour (MPH). The accuracy of this instrument depends on the placement and cleanliness of the pickup (pitot) tube. On some models, the pickup is part of the engine; on other models, the pickup is mounted on the transom. The tube should be tilted up for trailering or during operation in shallow water. Tilt the tube down while underway. If the speedometer is not working, check to see whether the tube has been damaged or is clogged with sand or other debris.

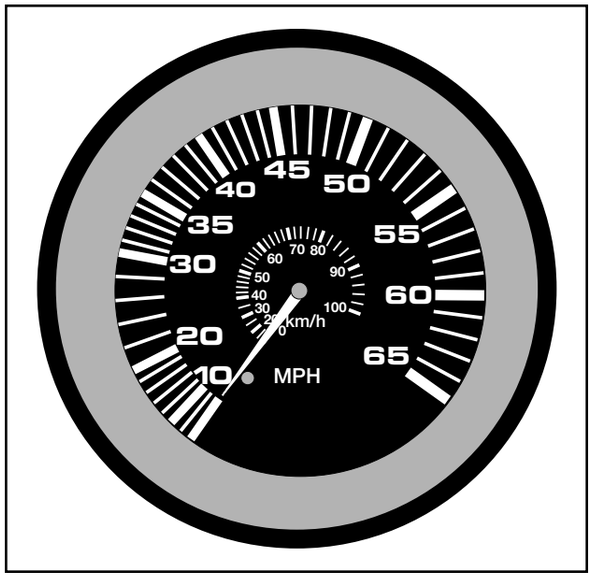

WATER PRESSURE GAUGE

The water pressure gauge measures the pressure of the engine cooling water. If the gauge registers a low reading, the water intake may be clogged or the outboard unit may be tilted up too high. Low pressure may lead to engine overheating.

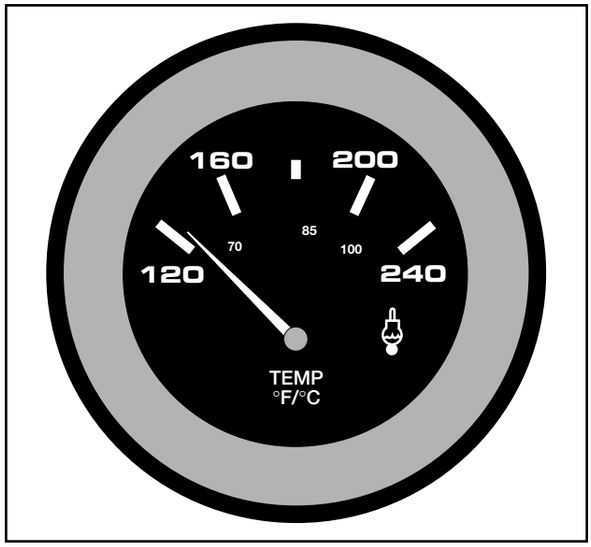

FUEL GAUGE

The fuel gauge displa ys the amount of fuel in the fuel tank(s). The most accurate reading of the gauge is at idle speed and when your boat is at a le vel position. While r unning, the fuel gauge will usually read higher than the actual level because the bow of the boat is higher . Since gauge readings are approximate, it is best to compare them to the hour s of use versus known fuel consumption or gallons per hour (GPH). The most common practice of good fuel management is the one-third (1/3) r ule. Use one-third (1/3) of your total fuel on board to travel to your destination, one-third (1/3) to return, and reser ve the remaining one-third for emergencies.

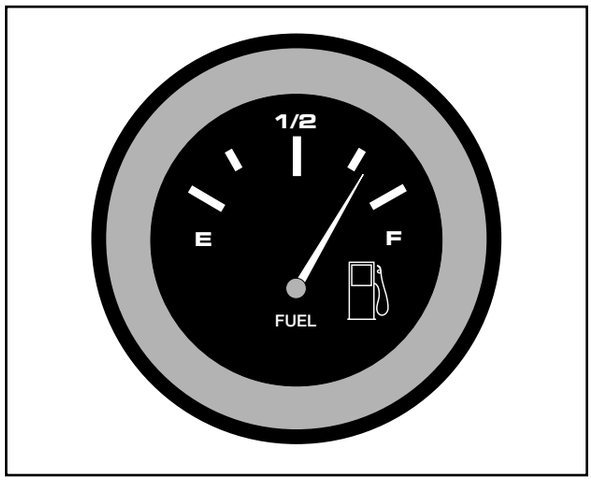

VOLTMETER

The voltmeter measures the condition of the main or cranking batter y in volts DC. Nor mal operating voltage when the engine is r unning at 1000 RPM or higher is betw een 12 and 15 volts. If your batter y is fully charged, the voltmeter should read in the 11.5 to 12.5 volt range when the ignition is on and the engine is not running. Check your batter y and charging system if the voltmeter reads below these normal ratings. An oscillating voltmeter reading may indicate loose belts or loose electrical connections.

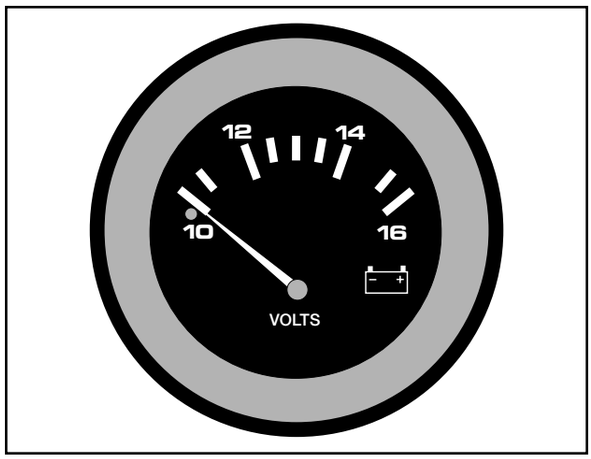

POWER TRIM GAUGE

The power trim gauge indicates the relative position of the drive unit. Read gauge carefully , as it does not show position of unit in degrees. Proper trim should be indicated b y bow attitude and engine RPM. F or more infor mation see your engine owner's manual.

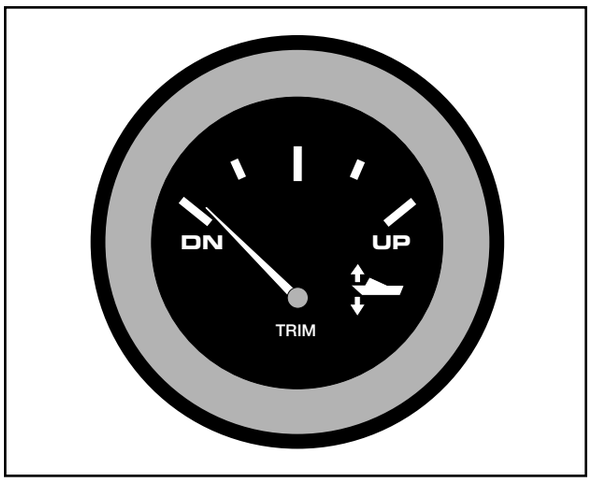

STEERING

Become familiar with the "feel" of your boat' s steering system. Steering does var y from boat to boat depending on hull shape, engine type, water and wind conditions and load. V arious steering systems are used on different models. On smaller boats, a push/pull cable system is used, on larger boats, pow er assisted and fully hydraulic systems are common.

All steering systems require periodic maintenance to be trouble–free and safe. Regular checks are essential. Be sure to read the manufacturer supplied operator' s manual before heading out on the w ater.

A manually adjustable trim tab is pro vided on some outboard motor s. Follow the instr uctions provided by the engine manufacturer for proper adjustment. This trim tab, when cor rectly adjusted, will help reduce steering effor t through the entire trim range.

To maintain a straight course, keep at least one hand in control of the steering wheel at all times while underway.

NOTE: Deep vee boats have a tendency to "hunt" (wander from side to side) at slow speeds with the steering wheel held straight ahead. This is a normal occurrence and can be minimized by anticipating boat movement and giving a slight turn of the steering wheel in the opposite direction.

SHIFT/THROTTLE CONTROL

The shift/throttle controls differ depending on model and engine configuration. Be sure to consult the engine and the control manual for any differences in operating your boat's shift/throttle control.

SINGLE LEVER ENGINE CONTROL (SIDE PANEL OR CONSOLE MOUNT)

A single lever engine control **(Figure 5.1)** operates as both a gear shifter and a throttle for the engine. **Figure 5.2** shows a single engine console mount control. To shift, move the lever into the first 15° of travel. Advance the lever beyond 15° to move from shifting range to throttle range. Never attempt to shift gears while the engine is not running.

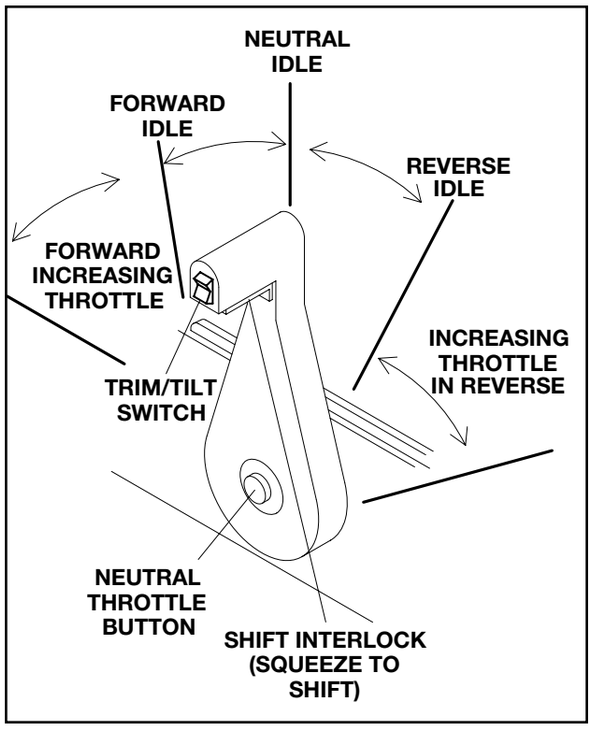

FIGURE 5.1 SHIFT/THROTTLE CONTROL

The single lever control has an engine warmup button near the base. Pressing the warmup button allows the transmission to remain in neutral while the operator advances the throttle for warming up the engine.

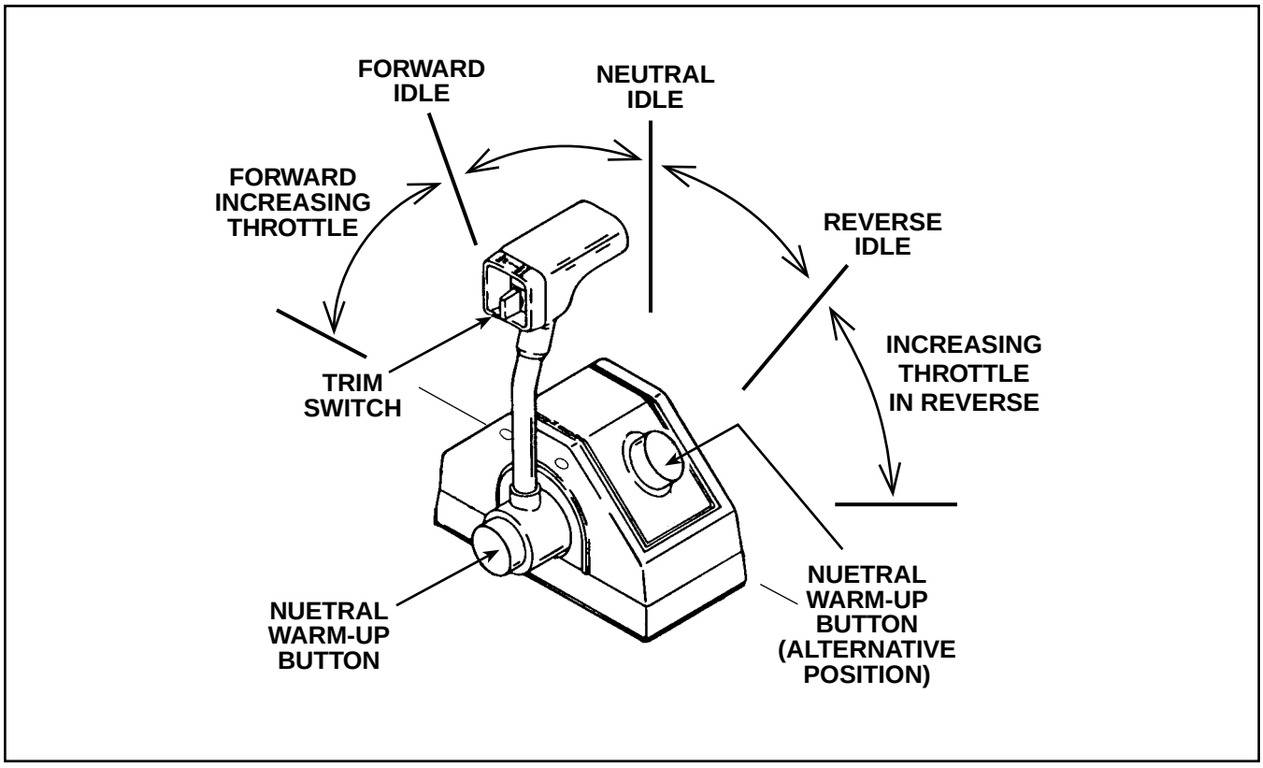

FIGURE 5.2 SINGLE ENGINE CONSOLE MOUNT

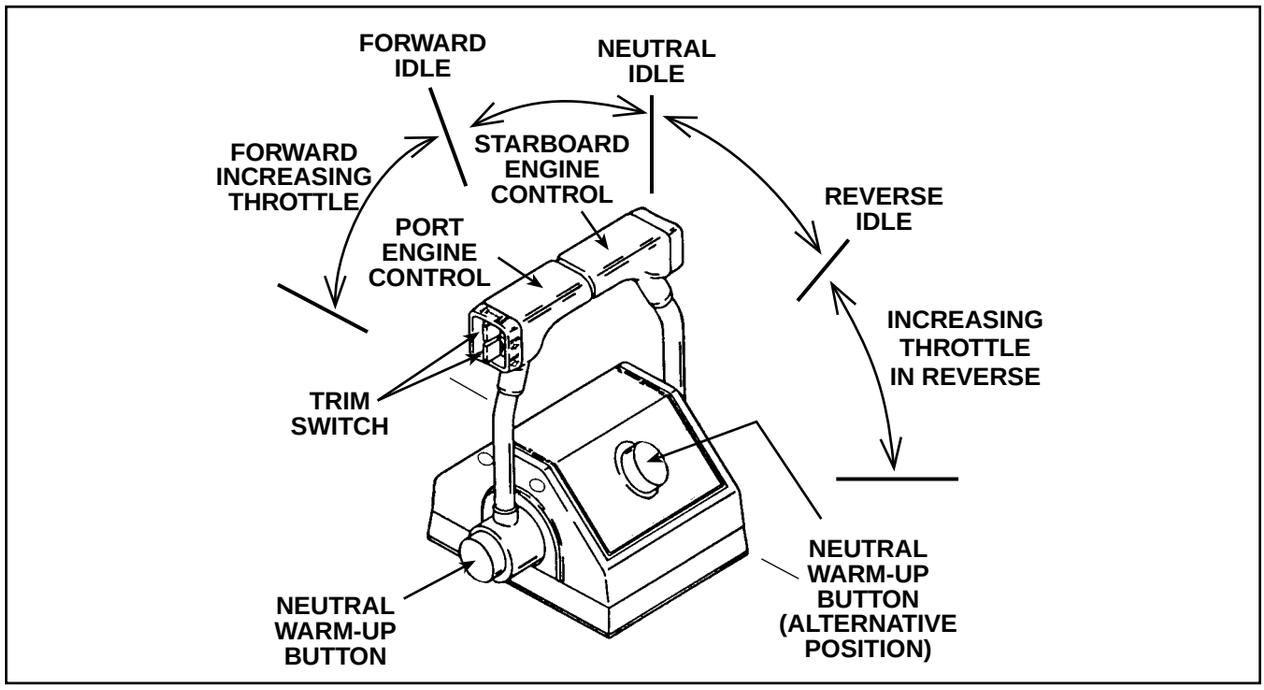

FIGURE 5.3 DUAL ENGINE CONSOLE MOUNT

TWIN LEVER ENGINE CONTROL

A twin lever engine control **(Figure 5.3)** operates as both a gear shifter and a throttle for twin engines. The placement of the controls allows the operator to grasp both controls and control both engines with one hand. To shift, move the lever into the first 15° of travel. Advance the lever beyond 15° to move from shifting range to throttle range. Never attempt to shift gears while the engine is not running.

The twin lever control has an engine warmup button near the base. Pressing the warmup button allows the transmission to remain in neutral while the operator advances the throttle for warming up the engine.

The trim switch for both the port and starboard engines is on the port engine control lever.

IMPORTANT: Allow the engine to warm up before engaging the shift control. Monitor all instruments while engine is idling during warmup. See the engine manufacturer's specifications for proper operating ranges.

SHIFT/THROTTLE OPERATION

Place the throttle/shift control handle in the NEUTRAL position. The engine will not start unless the control is in NEUTRAL.

Forward movement of the throttle increases the RPM of the engine. It increases boat speed through the water when the engine is in either forward or reverse gear. The throttle control also acts as the gear shift lever to control the forward and aft movement of the boat. Moving the throttle forward from the neutral position engages the shifting mechanism causing the boat to move forward. Continuing the forward movement of the throttle will increase engine RPM and cause the boat to move faster in a forward direction. Moving the throttle aft from the neutral position reverses the shift mechanism causing the boat to move backward. Continuing the aft movement of the throttle will increase the engine RPM and cause the boat to move faster in a backward direction.

When maneuvering at speeds under 1,000 rpm, you can reverse (move throttle forward or aft) the shift mechanism. This causes a braking action to help stop the boat.

NOTE: This information may vary between the different types of controls used by the manufacturers. Please read the instructions provided with your engine and control system.

NOTE: When shifting from forward to reverse or vice-versa, hesitate in neutral enough to let the propeller slow its turning to avoid damage to the shifting mechanism. Never shift from forward to reverse or vice versa when your tachometer reads over 1,000 rpm.

POWER TRIM/TILT OPERATION

The power trim system controls the angle of the outboard motor. Switches in the throttle control give the operator the ability to raise and lower the outboard motor for trailering, launching, shallow water operation, or to adjust the motor at cruising speed to achieve an ideal planing angle.

Best performance is usually obtained when the front of the hull is just slightly out of the water. On twin engine boats, the motors should always be trimmed together.

To trim the bow of the boat up, press the trim switch(es) in the direction marked UP. Moving the bow up will increase top speed and increases clearance over submerged objects, but can cause the boat to porpoise.

To trim the bow of the boat down, press the trim switch(es) in the direction marked DOWN. Running the bow down will help the boat accelerate and get on plane faster. It also could improve the boat ride in rough water but will reduce boat speed in most cases.

Winterization and Commissioning – 8

If properly used and maintained, your boat will give you years of use and enjoyment. By keeping your boat "ship shape", you will be doing more than protecting your investment; you will also ensure good performance and safety on the water.

This section describes how to properly maintain your boat. It includes a maintenance checklist you should follow as well as general information. By performing these inspections, your new boat will not only run smoother longer, but you will be safer on the water.

Performing the following maintenance is necessary to ensure your safety on the water. In addition to the following inspections follow the manufacturer's maintenance instructions in the major component owner's manuals supplied with your boat.

When cold weather has arrived or a change in your boat's usage requires extended storage, we suggest using the following guidelines to prepare your boat for this type of storage. If you live in an area that does not require seasonal storage, we recommend a thorough inspection once a year.

IMPORTANT: Consult your engine manual for specific instructions covering winterization of the engine.

LIFTING THE BOAT

With fiberglass boats, severe gelcoat crazing or more serious hull damage can occur during launching and hauling if pressure is created on the gunwales by the slings. Flat, wide belting-type slings and spreaders long enough to keep pressure from the gunwales are necessary. Cable-type slings should be avoided. Do not place the slings where they may lift on underwater fittings.

Never hoist the boat with more than a minimal amount of water in the bilge. Fuel and water tanks should preferably be empty, especially if of large capacity.

PREPARATION FOR STORAGE

NOTE: Remove the bilge drain plug immediately after taking the boat out of the water. After washing, raise the bow of the boat high to allow as much water as possible to drain while performing other storage preparations. Store the plug in a plastic bag and tape it to the throttle control lever so that it is easily found for relaunching.

TRAILER

Perform the following steps to winterize your trailer for storage.

- Check tire inflation.
- Clean and repack the wheel bearings. Make sure there is no water in the wheel hubs. Inspect the bearings and races for pitting. Inspect the grease seals for wear. Replace if necessary and fill the bearings with grease.
- Examine the entire trailer and running gear for signs of cracking or metal fatigue. Repair weld cracks, and tighten any loose bolts and screws.
- Check the frame. Make sure there are no signs of bending or swaying due to overloading.
- Repair or replace worn or misadjusted bunks or rollers.
- If rust has formed on the trailer, remove it by sanding and paint the bare spots to match the trailer.
- Inspect and adjust the brake system according to the manufacturer's recommendations. Look inside brakes for excessive rust.
- Lubricate the winch, the coupler, all rollers and pivot points.
- Check the safety chains.
- Inspect the winch and fastening hook for wear.

- Check tie-downs for fraying. Loosen or remove tie-downs.

- Check the electrical system for wear or loose connections, and repair if necessary.

- Open tail light lenses and inspect bulbs and sockets for excessive rust and corrosion. Coat metal base of bulb with a die-electric grease or spray with WD-40.

- If storing your boat on a trailer, make sure that the trailer supports are aligned with the structural members of the hull. Distribute the weight properly. Make sure your boat is well supported across the transom and keel.

- Put the rig on blocks or else move the trailer from time to time to prevent flat spots on the tires.

- Position your boat's bow to allow water to drain via the transom drain. Do not allow rain water to collect inside the boat.

- If it is possible for water to accumulate on the boat covers, poke a small hole near the back of your boat cover canvas. Prepare the hole with a grommet to prevent tearing. If your boat is tilted backwards, rain water will run through the hole and out the bilge drain hole.

HULL

- If your boat is going to be placed in dry storage, as soon as the boat is hauled out, scrape off any barnacles and other growth if necessary. Scrub the hull and deck thoroughly to remove marine growth and scum. (The hull is easiest to clean when the boat is first hauled out and while the adhering material is still wet.)

- Inspect the underwater gear and propellers for excessive wear or damage.

DECK

- Wash the deck, super structure, and/or cockpit, clean all chrome and coat with a rust inhibitor before storing.

- Clean the indoor/outdoor carpet.

ENGINE, SYSTEMS & COMPONENTS

ENGINE AND OUTDRIVE

Have your dealer prepare the engine and outdrive for winter storage. Your dealer will service the cooling system as part of the engine winterization. Special skills, tools, and equipment are required.

IMPORTANT: In regions where temperatures fall below freezing, all water in the engine must be removed or replaced with a marine antifreeze solution before storing your boat for the winter. Failure to do so will seriously damage the engine. Freeze damage is not covered by the warranty. Mix antifreeze according to label directions for the lowest expected temperature. Use non-toxic antifreeze to prevent damage to the environment. Make sure your boat's engine is slightly bow up during the extended storage period.

FUEL SYSTEM

Fill the fuel tank to minimize condensation. If tank is completely filled, fuel may overflow from the tank during hot weather. Help prevent damage to the environment. Leave enough space for fuel to expand. Add a gasoline stabilizer solution to the fuel prior to storage. Follow the stabilizer manufacturer's recommended procedure.

SEACOCKS

Seacocks are normally winterized as part of winterizing the equipment and systems they serve. When your boat is out of the water, open each seacock to drain water out of the valve. Water freezing in seacocks can damage valves.

IMPORTANT: During commissioning, be sure to close all seacocks before lowering your boat into the water.

FRESH WATER SYSTEM

Water must be removed from the fresh water system to prevent damage to system components during cold weather.

1. Turn on fresh water pump.

2. Open all faucets and allow pump to empty fresh water tank.

3. Close faucets when tank is empty. Shut off water pump.

4. Add approximately two gallons of non–toxic antifreeze mixture to fresh water tank. Mix anti-freeze in accordance with manufacturer recommendations.

NOTE: Antifreeze in fresh water tank will also be needed to winterize head and macerator.

5. Turn on water pump.

6. One by one, open each faucet, beginning with faucet furthest from pump. Close faucet when antifreeze starts to flow and leave it closed.

7. Shut off water pump

MARINE HEAD

- Have holding tank emptied at an approved pumpout station.

- Prepare the marine head for storage with a non-toxic antifreeze in accordance with manufacturer's recommendations.

VACUFLUSH® SYSTEM

The fresh water system must be winterized before winterizing the waste system. Refer to Vacuflush® System owner's manual for additional information.

1. Have holding tank pumped out at an approved pumpout station.

2. If necessary, add non–toxic antifreeze to fresh water tank. Mix antifreeze in accordance with the manufacturer's recommendations.

3. Operate head until antifreeze flows into bowl. *Allow sufficient time between flushes for vacuum to build up before flushing.*

4. Operate macerator until antifreeze flows through discharge fitting on side of hull. Flush head as needed to provide enough antifreeze to winterize macerator.

5 Dispose of antifreeze according to manufacturer's instructions.

RAW WATER SYSTEM AND LIVEWELL

NOTE: You will need two containers to winterize this system. Have hose attached to cockpit hose connector before beginning winterization.

- Drain livewell by removing standpipe.

- Locate the hose that connects the raw water pump with the raw water through hull pickup fitting, and close seacock.

- Disconnect hose at the point that it connects with the through hull fitting.

- Mix one-gallon of non-toxic antifreeze in accordance with manufacturer's recommendations. Place hose end in antifreeze.

- Turn Y-valve selector handle to live well.

- Activate raw water system pump by turning on the live well/raw water washdown switch at the helm.

- When you see the antifreeze mixture entering the live well, turn the Y-valve selector to the raw water washdown position and position the empty container to catch the flow of antifreeze from the hose.

- Turn off the raw water pump.

- Reconnect the hose to the through hull fitting, and open seacock.

- Replace the live well stand pipe.

- Dispose of antifreeze mixture according to manufacturer's instructions.

INTERIOR CLEANING

- Scrub all interior surfaces including cupboards, cabinets and drawers.

- Be sure to remove everything that can hold moisture and cause mildew. Remove and store OFF the boat all cushions, mattresses, curtains, blankets, sheets, pillows, towels and clothing.

- If it is necessary to store cushions on board, open all zippers and lift cover away from the foam padding by placing a small plastic bowl or other round blunt object inside the cushion to allow for adequate air circulation. Seats that can be, should be stored in the down or folded out position.

- Make sure the cabin is well-ventilated.

- PFD's and other safety equipment must be cleaned and dried. If left on board, place them where air can circulate around them.

- Clean and thoroughly dry the bilge area. Remove all rags, sponges or other cleaning materials from bilge area.

- Allow the interior to completely air out for a couple of days, weather permitting.

- If you store your boat outside, we recommend that you do not store it with the bimini top raised. Cover with a storage cover, tarp or plastic (available from your dealer) especially if you live in an area where heavy snow is possible. Whatever material you use as a cover, be sure the boat is properly ventilated.

NOTE: After cleaning, make sure everything is thoroughly dry and air can circulate freely throughout the inside of your boat.

BATTERY

⚠ WARNING

To prevent personal injury, wear goggles, rubber gloves and a protective apron when working with battery. Battery electrolyte can cause severe eye damage and burns to the skin. In case of spillage, wash area with a solution of baking soda and water.

When working on or around battery connections, do not allow metal tools or loose wires to contact terminals. Contact across positive (+) and negative (-) terminals will cause a short circuit. Electrical burns or personal injury may result.

- Remove the battery. Check water level and store away from freezing temperatures.

IMPORTANT: Battery should be stored in a cool, dry place.

- Clean outside battery case, terminals and battery clamps with a solution of baking soda and water.

NOTE: Do not allow baking soda/water solution to enter the cells.

- Lightly sand battery posts and clamps with fine grit emery cloth.

- Apply a light coat of petroleum jelly to cover the end of the battery cables.

- A monthly recharge or continuous trickle charge should be applied to the battery during storage.

STORAGE ON TRAILER

- Loosen all tie-downs to relieve the stress on the hull.

- Place blocks under the axles to keep tires off the ground.

- Re-pack the trailer wheel bearings. Water may be trapped inside the bearings. (Your dealer can help you do this.)

- Store with the bow up and remove the drain plug to allow for any excess water to drain.

RECOMMISSIONING THE BOAT AFTER STORAGE

- Inspect the fuel system and all associated equipment for proper connections, corrosion, leaks or other damage. Always be aware of any odor of fuel vapors.

IMPORTANT: For detailed information concerning recommissioning of the engine, refer to your engine manual.

- Charge and install battery(s) in boat.

- Inspect all battery wiring. Repair or replace if necessary.

- Attach the battery cables and tighten the cable clamps.

IMPORTANT: Do not apply petroleum jelly or marine grade grease before connecting and tightening clamps.

- Apply petroleum jelly or marine grade grease on posts and clamps to eliminate air pockets and acid build up after clamps are tightened.

- Check engine compartment and bilge for signs of nesting animals and clean as necessary.

- Check entire engine for cracks/leaks caused by freeze damage.

- Before lowering your boat into the water, be sure to close all seacocks. Coat hull drain plug threads with petroleum jelly and reinstall drain plug.

- Clean the bilge area.
- Inspect all exhaust connections for carbon monoxide leakage. Adjust and repair as required.
- Test the navigational lights and all other lighting on board.
- Inspect all wiring for fraying, wear, loose connections and other damage.
- Inspect all switches, controls and other related equipment for proper operation.
- Inspect all safety equipment for proper operation and physical condition.
- Open all faucets and fill freshwater holding tank with water. Turn freshwater pump on to allow water to flow through faucets until all antifreeze is flushed out and the water runs clear, then close faucets. Fill the freshwater tank until full, then check the entire system for water leaks.
- Launch the boat and start the engine. It may take a minute of cranking to allow the fuel system to prime. When the engine starts, keep a close watch over the gauge readings and check for leakage and abnormal noises. Keep speeds low until the engine has reached normal operating temperature. If your engine was fogged for winterization, you will see exhaust smoke for a few minutes while the fogging oil is burned off.

Refer to engine and boat accessory manuals for further recommissioning instructions.

General Maintenance – 9

This section contains information that requires use and disposal of oils, fuels, and chemicals. Pay particular attention to the environment during the use and disposal of these materials.

We recommend that maintenance and repairs be performed by your dealer. However, some owners may prefer to take care of routine maintenance and repairs themselves. For those individuals, this chapter includes general information and basic procedures. Keep a record of all completed work in the Maintenance/Service Log. A copy of this log is in Section 1.

IMPORTANT: Check with your dealer before beginning any maintenance or repair if you are not sure about the proper tools, equipment and supplies to be used. Only use approved marine replacement parts available from your dealer. Always refer to the manufacturers' manuals for detailed maintenance and repair procedures.

SERVICE SCHEDULE

The manufacturer of your engine and most of your boat's component manufacturers provide a recommended service schedule, listing items requiring routine attention, type of maintenance, and frequency. Read the manuals supplied with these items.

The service schedule is a guide based on average operating conditions. Under severe operating conditions, shorten service intervals.

DAILY (EACH USE)

- Inspect your outboard for damage. If a propeller is damaged, have it repaired or replaced.
- Inspect the hull for gelcoat damage. Have your dealer repair gelcoat damage as soon as possible.
- Check fluid levels in batteries and clean terminals with a wire brush if corroded.
- Inspect zinc anodes for deterioration and replace if 50% or more of the anode is deteriorated.
- Inspect the steering for looseness or binding and perform service in accordance with steering system manufacturer's recommendations if required.
- Inspect the filter on the raw water pump. Clean if necessary. Refer to the pump owner's manual for cleaning procedures.
- After each day's use, wash down fiberglass with a mild soap (dish detergent or car wash soap) and plenty of clear water. If you used your boat in salt water, this washdown is especially important!
- Flush engine with fresh water to clean out sand and salt. Make sure bow is higher than engine to prevent water from backing up into engine. See your dealer for attachments that allow flushing engine with a garden hose.

  While flushing, run engine approximately 10–15 minutes. *Observe the engine multi function gauge to make sure engine does not overheat. Be sure that flushing hose remains attached to outdrive.*
- While cleaning engine compartment, inspect all belts and hoses for deterioration. Make sure clamps are tight.

EVERY 100 HOURS OF OPERATION OR SEMIANNUALLY

- Inspect the engine mounting hardware for tightness.
- Clean the engine flame arrester and ventilation hoses.
- Clean and polish the hull bottom using a marine recommended cleaner and wax.
- Inspect the bilge pumps and float switches. Float switches gradually lose sensitivity due to an accumulation of bilge oil on the operating surfaces. Remove and clean or replace the float switches periodically.

- Clean and inspect the entire bilge. Dirt in the bilge will accumulate, soak up oil and eventually become a fire hazard, so keep your bilge clean. See your dealer for environmentally safe bilge cleaners.

- Visually inspect all electrical connections for chafing and corrosion and tighten connections if they are loose.

- Carefully inspect all lifesaving equipment (PFDs) for cut or torn fabric and other signs of deterioration and replace if necessary.

- Carefully check hull for cracks and contact your dealer if you suspect damage has occurred.

- Check the entire fuel system for any evidence of line deterioration or fuel leaks. If any suspicious lines or connections are discovered, have them repaired or replaced before going out on the water.

ANNUAL MAINTENANCE

- Have a qualified technician thoroughly inspect your entire electrical system, including performing a leakage test of each circuit.

SALTWATER CORROSION

The entire boat should be rinsed with fresh water immediately after a cruise in saltwater. If the boat is used primarily in saltwater, wax the hull monthly and apply corrosion inhibitor to all hardware. See your dealer for products suitable for the marine saltwater environment. Freshwater internal flushing is recommended when used in salt, polluted or brackish waters.

BOTTOM MAINTENANCE

IMPORTANT: If your boat will be in water continuously, we recommend sealing the bottom of the hull with a high quality barrier coating. Unsealed gelcoat may form water blisters. Repair of water blister damage is not covered under the warranty. If required, contact your dealer for further information.

The best way to prevent blistering is to minimize the amount of time the boat remains in the water. If the boat must remain in the water, the application of a “blister guard” system to the hull below the waterline will lessen the possibility of blistering. The application of blister guard will decrease the maximum speed of your boat. Proper application is essential; contact your dealer or marine service center for additional information.

We recommend your boat be removed from saltwater and rinsed after each use to prevent unwanted marine growth on the hull and to maintain ultimate high performance. The bottom of your boat must be kept clean! Any buildup of marine life from water will create drag and affect the boat’s performance and efficiency. Never use brushes or scouring pads on the bottom of your boat, as this can cause small scratches that will actually trap in dirt.

Antifouling bottom paint is designed to dissolve slowly to prevent marine growth. Therefore, the hull bottom should be repainted at the beginning of the boating season. Factors to take into consideration when selecting a protective bottom paint are water temperature, pollution, salinity, current and organic material in the water.

IMPORTANT: Consult with your dealer for recommended bottom paints and local laws that govern your area. Many states regulate the chemical content of bottom paints to meet environmental standards and regulations.

1. Scrub hull bottom with a bristled brush and mixture of soap and water.

NOTE: Repainting the hull bottom is not required after each scrubbing unless bare areas are visible in the bottom paint.

2. Sand entire bottom surface of boat.

3. Smooth out all rough areas as required.

4. Clean bottom surface to remove all dust and foreign materials.

5. Make sure bottom surface is completely dry.

6. Apply new coat of bottom paint.

NOTE: Always follow manufacturer’s procedures and recommendations concerning application of paint and drying time before putting your boat in the water.

PROTECTION AGAINST ELECTROLYSIS

IMPORTANT: It is the boat owner’s responsibility to periodically inspect and replace the sacrificial

zinc anodes. Damage resulting from electrolytic corrosion is not covered by the warranty.

Sacrificial zinc anodes, installed by the dealer or the engine manufacturer, protect the hardware that is exposed to the water. Electrolysis attacks the softest or least noble metals first. Because zinc is a less noble metal, it will decompose before the more noble metals. Check these zinc anodes periodically and have them replaced as required. See your dealer for parts and service.

Zinc is also used to protect metal that is exposed to saltwater. The salt causes a galvanic action that decomposes metals.

DECK AND HULL CARE

⚠ CAUTION

Waxed gelcoat surfaces can be very slippery. Do not wax any textured or non-skid surfaces.

IMPORTANT: Keep fiberglass surfaces clean to prevent dirt from scratching and dulling the finish. Wash down with a mild soap (dish detergent or car wash soap) and plenty of clear water, especially if your boat has been exposed to salt water.

The finish on your boat is made of highly durable marine gelcoat. With proper care, this finish will last for many years, retaining its lustrous appearance. For added protection you can have the hull of your boat coated with an antifouling paint. See your dealer for further information.

Routine, periodic cleaning is the only practical way to keep the surface of your boat looking shiny and new. Keeping your boat in showroom condition means greater personal satisfaction and higher resale value. Special cleaning products are available from your dealer to remove mildew. Boats left outdoors will gradually deteriorate from exposure to sunlight, water, dust and chemicals in the air. Outdoor exposure may cause your boat's surface to show a variety of changes, including:

- Chalking (fine, powdery whiteness on the surface)
- Fading (gradual loss of color)
- Yellowing
- Loss of gloss

Darker colors tend to exhibit these changes more rapidly than light colors because they absorb more of the sun's rays (ultraviolet and infrared).

⚠ CAUTION

Wire brushes, scouring pads or other abrasive type materials/solutions should never be used on the deck or hull of your boat. They create small scratch marks that will collect marine growth and other foreign materials.

NOTE: Before using a particular cleaning solution or method for cleaning, it is a good idea to test the material to be cleaned in a hidden or inconspicuous area for possible adverse reactions. Use cleaning agents sparingly. Never discharge cleaning solutions into the waterways. Do not use products containing phosphates, chlorine, solvents, or non biodegradable or petroleum based products.

The deck and hull can be easily cleaned with a mild detergent and water (with the exception of oil or heavy grime). Use a clean rag or sponge. Dirt, sand, or grit in a dirty rag could scratch the gelcoat surface. DO NOT USE abrasives to clean your boat. Boat surfaces, even textured walkways and steps, can be very slippery when covered with soap suds. Use caution to protect yourself and others from slips and falls. Wear deck or boat shoes whenever you are in your boat.

After you have thoroughly cleaned your boat, it is ready for waxing. A boat used In northern climates should be waxed at the beginning and the end of the boating season. In southern climates, wax it every three months to protect the hull from damage by the sun's rays. Use a caranuba wax. If the deck or hull have a light white milky film, the gelcoat may have oxidized. Ask your dealer to recommend a suitable rubbing compound for removing the oxidation.

NOTE: Do not use a spray wax. Wax accidentally sprayed on nonskid surfaces will make them very slippery.

If nonskid or textured surfaces on decks, walkways, and steps become stained, clean them with a bristle brush and a bathroom fiberglass cleaner. *Be careful! Scrubbing smooth gelcoat surfaces with a bristle brush may scratch the gelcoat.*

Keeping both the interior and exterior of your boat in good condition and inspecting your boat regularly to keep minor problems from becoming major ones are good rules of thumb for proper boat care. REMEMBER, A BOAT KEPT IN NEARLY NEW CONDITION, REGARDLESS OF AGE, RETAINS A HIGH RESALE VALUE.

FIBERGLASS REPAIR

Although your deck and hull have been designed to withstand normal use, it is inevitable that surfaces will become scratched or chipped over a period of time. Superficial scratches can usually be rubbed out with a compound cleaner.

"Hairline cracks" or "spider webbing" may develop in the gelcoat surface of a hull or deck. This can be caused by weathering, impact or other factors. Small blisters or gouges may also occur through normal wear. These do not affect the strength of the hull or deck and can easily be repaired by you or your dealer.

The affected area should be chipped or sanded away and a thin layer of color-matched gelcoat applied. This layer is then sanded smooth and buffed back to its original luster. Your dealer can obtain color-matched gelcoat and provide further instructions from the manufacturer.

Fiberglass hulls are tough, but like hulls of any other materials, they can be damaged. A fiberglass hull has virtually no internal stresses. Thus, when a part is broken or punctured, the rest of the hull retains its shape. A severe blow will either be absorbed or result in a definite, localized break. In the case of a break of this nature, the boat should be returned to your dealer for repair.

You will need the following items for minor repairs:

- Gelcoat
- DDM (clear liquid catalyst)
- Putty knife or equivalent
- Razor blade
- Fine sandpaper (400 to 600 grade)
- Wax paper (piece big enough to cover repair

⚠ WARNING

Gelcoat and fiberglass resin are flammable; work in well-ventilated area free from any fire hazard.

For minor repairs follow this procedure:

1. Clean the area to be repaired and clear it of wax and oil.
2. Thoroughly clean out nicks, chips and scratches.
3. Sand area to be repaired so gelcoat will bond.
4. IN A SEPARATE CONTAINER, MEASURE ONLY THE AMOUNT OF GELCOAT YOU NEED. Mix a 2% ratio of catalyst to the amount of gelcoat being used (a spoonful of gelcoat will require only a drop or two of catalyst).

NOTE: DO NOT pour any unused portions of the gelcoat/catalyst mixture back into either original container.

5. Apply gelcoat to area leaving a slight lift above the surface.
6. Cover with wax paper (lack of oxygen helps mixture set) and let set 20 to 30 minutes.
7. Remove wax paper and shave off excess gelcoat with a razor blade.
8. By the time the area is shaved smooth, you are ready to sand (Use 400 to 600 grade sandpaper, NO SUBSTITUTES.)
9. Rub or buff the fiberglass with automotive cleaner compound, then wax.

Some discoloration may occur if your boat has weathered. For your first attempt at repair, experiment on an area not normally visible. With a little experience, even the novice can repair a scratch with few, if any, visible repair marks.

HARDWARE AND FITTINGS

Chrome, stainless steel and aluminum hardware should be cleaned with water, mild detergent, and a cloth. Rinse, then dry with a soft cloth. After cleaning, a commercial aluminum or chrome cleaner may be applied. For excessively dirty or oily hardware, use alcohol. AVOID THE USE OF ABRASIVES WHEN CLEANING HARDWARE.

Inspect all hardware and fittings to make sure they are secure. All screws, bolts, clamps, cleats, etc., must be tight. Be sure to lubricate hardware and fittings where needed.

UPHOLSTERY

Your boat's seats and vinyl upholstery should be kept as clean as the exterior finish to prolong life and beauty.

SEAT COVERINGS & VINYL

The seat coverings and vinyl trim are made of temperature resistant vinyl.

1. Always clean up spills quickly to prevent staining, especially soft drinks.

2. Clean dirt and smudges with mild soap and warm water. If necessary, scrub with a soft bristle brush to remove dirt from textured vinyl. Dry with a soft, lint-free cloth or towel.

3. Periodically, clean seat coverings with a product designed to clean and protect vinyl surfaces.

Certain household cleaners, powdered abrasives, steel wool and industrial cleaners can cause damage and discoloration and are not recommended. Petroleum-based cleaning products such as dry cleaning fluids and lacquer solvents should not be used, as they will remove the printed pattern and gloss. Waxes should be used with caution. Many contain dyes or solvents that can permanently damage the protective coating.

4. Suntan oil will damage vinyl upholstery. Use suntan lotion instead of suntan oil.

5. Removable outside seat cushions should be placed inside when not in use.

Exposure to the sun is the enemy of all upholstery materials. For maximum life, we recommend keeping them covered with a cockpit or full length cover when you are not using your boat.

INTERIOR FABRICS

Treat the fabric upholstery the same as home fabric upholstery. Vacuum and shampoo to maintain upholstery and to keep it clean and odor free. Spray with Lysol™ or other disinfectant to prevent the build up of mildew.

WINDSHIELDS AND WINDOWS

Safety glass windows and windshields may be cleaned just like those in a car. Plastic and Plexiglass surfaces require special attention. Flood acrylic windshields and port windows with plenty of clean warm water. Use a soft clean cloth. Rinse with clear water.

⚠ CAUTION

Do not use window cleaning sprays, scouring compounds or solvents to clean plastic windows. Scouring compounds will scratch the windows. Sprays and solvents penetrate the surfaces and cause hazing which will obstruct visibility.

Vibration may loosen windshield fasteners and braces during normal use. These should be checked periodically for tightness.

CARPETING

EXTERIOR

Scrub indoor/outdoor carpeting with a brush using mild detergent and warm water, then thoroughly rinse with clear water. Allow carpet to dry completely before use. Apply a light coating of Scotch Guard® to protect against accidental spills.

INTERIOR

Vacuuming and occasional carpet shampoo are recommended for extended life and appearance. Apply a light coating of Scotch Guard® to protect against accidental spills.

CANVAS

Canvas or "bimini tops" are designed to protect the helm seating areas from the sun. Although these tops are intended to provide ample weather protection for the helm, they are not completely weather tight like a winter storage cover.

To keep exterior seat cushion foam from getting wet, we recommend that the cushions be removed and properly stored when not in use unless the boat is fitted with a full length cover.

CLEANING

IMPORTANT: Do not use hot water, dry in an automatic dryer, dry clean or steam press canvas.

1. Wet down all canvas. Use a soft bristle brush and scrub with a mild detergent and water solution.

2. Use a mild solution of ammonia/water and scrub for heavy soil or mildew build up. Be sure to rinse thoroughly.

3. Brush or sweep underside of the top. Spray with Lysol™ or other disinfectant to prevent mildew.

CARE

1. Care for vinyl-coated canvas as you would vinyl upholstery.

2. Lubricate zippers with paraffin and snaps with petroleum jelly.

3. If a leak occurs along a canvas seam, rub with paraffin or apply a light coating of Scotch Guard®.

4. Air dry all canvas material before storing. Never store canvas while damp or wet and provide proper ventilation to prevent mildew.

5. Avoid mooring under trees.

6. Never tow your boat with the top up.

7. When not in use, remove the top and store in the boot on board your boat.

Nautical Glossary – 10

Abaft
Toward the stern.

Abeam
Amidships, at a right angle to the keel.

Aboard
On, in, or into a boat.

ABYC
American Boat and Yacht Council, Inc., the organization that sets voluntary safety and construction standards for small craft in the USA.

Adrift
Without motive power and without anchor or mooring.

Afloat
On the water.

Aft
Describing the after section of a vessel, or things to the rear of amidships and near the stern.

Aground
Touching bottom.

Amidships
In the center, the center portion of a vessel.

Anchor
A forging or casting shaped to grip the sea bottom and, by means of a cable or rope, hold a boat in a desired position.

Anchorage
A customary, suitable and (usually) designated harbor area in which vessels may anchor.

Astern
Toward the stern. An object that is aft of a boat is said to be astern of the boat.

Athwart
Across.

Aweigh
Off the bottom, said of an anchor.

Aye
Yes, while aboard a boat or ship. Means "I understand."

Bail (Bale)
To remove water from a boat by pump or bailer.

Ballast
Heavy material such as iron, lead, or stone placed in the bottom of the vessel.

Beacon
A post or buoy placed over a shoal or bank to warn vessels, also a signal mark on land.

Beam
Imaginary line amidships at right angles to keel of vessel. Also vessel's width amidships.

Bearing
The direction or point of the compass in which an object is seen.

Belay
To make fast to a cleat or belaying pin; to cancel an order.

Below
Beneath, or under, the deck. One goes below when going down into the cabin.

Bend
To fasten by means of a bend or knot.

Berth
A position, as a place to sleep or in which a vessel maybe made fast; a margin of safety, as "a wide berth."

Bilge
The lower internal part of a boat's hull.

Bollard
A strong post for holding lines fast.

Bow
The forward part or front of the boat.

Breakers
Waves cresting as they reach shallow water, as at or on a beach.

Breakwater
A structure, usually stone or concrete,built to create a harbor or improve an existing one.

Bulkhead
Vertical partition in a boat.

Burdened Vessel
Former term for the vessel which must stay clear of vessels with the right-of-way.

Calking (Caulking)
Forcing filler material into the seams of the planks in a boat's deck or sides, to make them watertight.

Camber
The arch of a deck, sloping downward from the center toward the sides.

Capsize
To turn over.

Carburetor Backfire Flame Arrestor
Required equipment on all motorboats except outboards and diesels. Reduces chance of fire caused by backfires in internal combustion engines.

Cardinal Points
The four main points of a compass; north, east, south, and west.

Ceiling
The inside lining of the hull.

Certificate
Government paper, such as a boat's license.

Chart
A map of a body of water that contains piloting information.

Chine
The intersection of sides and bottom of a boat.

Cleat
A piece of wood or metal with projecting ends to which lines are made fast.

Clinker
A method of planking in which the lower edge of each strake overlaps the upper edge of the strake next below. (Also called lapstrake.)

Coaming
A raised edge, as around part or all of a cockpit, that prevents seawater from entering the boat.

Coast Guard
The federal marine law enforcement and rescue agency in the US.

Cockpit
A well or sunken space in the afterdeck of a small boat for the use of the helmsman and crew.

Companionway
A hatch or entrance, from deck to cabin.

Compass
The instrument which shows the heading of a vessel.

Cowls
Hooded openings used for ventilation.

Cradle
A frame used to support a vessel on land.

Current
The movement of the water in a horizontal direction.

Deadrise
The rise of the bottom of a midships frame from the keel to the bilge.

Deck
Any permanent covering over a compartment.

Deep-six
To discard or throw overboard.

Dinghy
A small, open boat.

Displacement Hull
Type of hull that plows through the water even when more power is added.

Dock
An enclosed or nearly enclosed water area; all the port installations; a place where vessels can moor, as a pier, wharf, or floating dock.

Documented Vessel
Vessel registered with the U.S. Coast Guard.

Dolphin
A small group of piles, in the water, generally used for mooring or as a channel marker.

Draft
The depth of the vessel below the water line, measured vertically to the lowest part of the hull.

Dunnage
Mats, boughs, pieces of wood, or other loose materials placed under or among goods carried as cargo in the hold of a ship to keep them dry and to prevent their motion and chafing; cushioning or padding used in a shipping container to protect fragile articles against shock and breakage; baggage or personal effects.

Ebb
An outgoing tide.

Estuary
An inlet or arm of the sea.

Fathom
Six feet.

Fenders
Objects placed along the side of the boat to protect the hull from damage.

Flare
The outward spread of the boat's sides from the waterline to the rail at the bow. Also, a pyrotechnic signalling device that can indicate distress.

Fore
Used to distinguish the forward part of a boat or things forward of amidships. It is the opposite of aft or after.

Forward
Toward the bow.

Frame
Ribs of the hull, extending from the keel to the highest continuous deck.

Freeboard
The vertical distance measured on a boat's side from the waterline to the gunwale.

Galley
The kitchen area of a boat.

Gimbals
Swivels used to keep equipment level.

Give-Way Vessel
The one which must stay clear of vessels which have the right-of-way.

Grab Rail
A convenient grip, on a cabin top or along a companion ladder.

Gunwale (pronounced gunnel)
The upper edge of a boat's side.

Harbor
A safe anchorage, protected from most storms; may be natural or man-made, with breakwaters and jetties; a place for docking and loading.

Hatch
An opening in a boat's deck for persons or cargo to go below.

Head
A marine toilet.

Headway
Forward motion of a vessel through the water.

Helm
The wheel or tiller by which a ship is steered.

Holding Tank
Storage tank for sewage, so that it will not be pumped overboard into the water.

Hull
The body of a boat.

Hypothermia
A physical condition where the body loses heat faster than it can produce it.

Inboard
More toward the center of a vessel; inside; a motor fitted inside the boat.

Inland Rules
Rules of the road that apply to vessel operation in harbors and certain rivers, lakes, and inland waterways.

Intracoastal Waterways
ICW: bays, rivers and canals along the coasts (such as Atlantic and Gulf of Mexico coasts), connected so that vessels may travel without going into the open sea.

Jetty
A structure, usually masonry, projecting out from the shore; a jetty may protect a harbor entrance.

Keel
The permanently positioned, fore-and-aft backbone member of a boat's hull.

Knot
To bend a line. Also, a unit of speed equal to one nautical mile (6,076.10 feet) an hour.

Launch
(1) To put a vessel into the water;
(2) A small open powerboat, mainly used for transportation between a vessel and shore.

Lee
The side opposite to that from which the wind blows.

Leeward
Situated on the side turned away from the wind. (Opposite of windward.)

Leeway
The amount a boat is carried sideways by the wind's force or current.

Limber Holes
Drainage holes in the bilge timbers of a vessel, allowing to run to a low point for pumping out.

List
(1) A continuous leaning to one side, often caused by an imbalance in stowage or a leak into one compartment;
(2) A light list is a printed listing of aids to navigation, in geographical order or inclining of a vessel toward the side.

LOA
Length overall; the maximum length of a vessel's hull, excluding projecting spars or rudder.

Locker
A storage place, a closet.

Log
A record or diary of a vessel's journey.

Lubber's Line
A mark or permanent line on a compass that shows the course of the boat.

Making Way
Making progress through the water.

Marina
A place, essentially a dock area, where small recreational craft are kept; usually floats or piers, as well as service facilities, are available.

MAYDAY
A radio distress call, from the french m'aidez (help me); SOS in Morse Code.

Mooring
Commonly, the anchor chain, buoy, pennant, etc., by which a boat is permanently anchored in one location.

Motor
A source of mechanical power.

Motorboat
Any watercraft 65 feet or less in length propelled by machinery, whether or not such machinery is the principal source of propulsion.

Navigation
The art of conducting a ship from port to port.

Nautical Mile
6076.12 feet, or 1852 meters, an international standard; the geographical mile, the length of one minute of latitude at the equator, is 6087.20 feet.

Nun Buoy
A conical, red buoy bearing an even number and marking the starboard side of a channel from seaward.

Oar
A long, wooden instrument with a flat blade at one end, used for propelling a boat.

Outboard
(1) A propulsion unit for boats, attached at the transom; includes motor, drive-shaft, and propeller; fuel tank and battery may be integral or installed separately in the boat;
(2) Outside or away from a vessel's hull; opposite of inboard.

Outdrive
A propulsion system for boats, with an inboard motor operating an exterior drive, with driveshaft, gears, and propeller; also called stern-drive and inboard/outboard.

Overall Length
The extreme length of a vessel, excluding spars or rigging fittings. See LOA.

Painter
A rope attached to the bow of a boat for making it fast.

PFD
Personal Flotation Device.

Pier
A structure, usually wood or masonry, extending into the water, used as a landing place for boats and ships.

Pile
A vertical wooden or concrete pole, driven into the bottom; may be a support for a pier or floats; also used for mooring.

Piling
A structure of piles.

Pitch
(1) The up and down movement as the bow and stern rise and fall due to wave action;
(2) The theoretical distance advanced by a propeller in one revolution.

Planing Hull
Type of hull that is shaped to lift out of the water at high speed and ride on the surface.

Port
The left side of a boat when you are facing the bow, also a destination or harbor.

Privileged Vessel
Former term for the vessel with the right-of-way.

Propeller
Wheel or screw. Mechanism that pushes water aft to propel the boat.

Rigging
The general term for all lines(ropes) of a vessel.

Roll
The sideward motion of a boat caused by wind or waves.

Rules of the Road
The nautical traffic rules for preventing collisions on the water.

Scope
The length of the anchor rope or chain. 6 to 1 scope means that the length of the anchor rope from the boat to the anchor is 6 times the depth of the water.

Scupper
A hole allowing water to run off the deck.

Sea Anchor
A floating canvas cone, held open by wire rings, with an opening in the smaller end, and a rope bridle at the larger end attached to a line leading to the vessel; used in storm conditions to (a) keep the bow of the boat to the wind, and (b) slow downwind drift of the boat.

Seacock
A through-hull valve, a shut-off on a plumbing or drain pipe between the vessel's interior and the sea.

Slip
(1) A berth for a boat between two piers or floats;
(2) The percentage difference between the theoretical and the actual distance that a propeller advances when turning in water under load.

Sole
The cabin or cockpit floor.

Spar Buoy
A channel marker that looks like a tall, slender pole.

Stand-On Vessel
The vessel with the right-of-way.

Starboard
The right side of a boat when you are facing the bow.

Stern
The after end or back of the boat.

Stow
To store items neatly and securely .

Strake
Planks running fore and aft on the outside of a vessel.

Taffrail
The rail around a boat's stern.

Tide
The alternate rise and fall of waters caused by the gravitational attraction of moon or sun.

Topsides
(1) The sides of a vessel above the waterline;
(2) On deck as opposed to below deck.

Transom
The transverse planking which forms the afterend of a small, square-ended boat. (Outboard motors are usually attached to a transom.)

Trim
To arrange weights in a vessel in such a manner as to obtain desired draft at bow and stern.

Unbend
To cast-off or untie.

Underway
Vessel in motion, i.e., when not moored, at anchor or aground.

USPS
United States Power Squadron, a private membership organization that specializes in boating education and good boating practices.

Vessel
Every kind of watercraft, other than a sea-plane on the water, capable of being used as a means of transportation on water.

Wake
Moving waves, created by vessel motion. Track or path that a boat leaves behind it, when moving across the water.

Wash
The loose or broken water left behind a vessel as it moves along; the surging action of waves.

Waterline
The intersection of a vessel's hull and the water's surface; the line separating the bottom paint and the topsides.

Way
Movement of a vessel through the water. Technically it is underway when not at anchor, aground, or made fast to the shore. The common usage is interpreted as progress through the water. Headway when going forward and Sternway when it is going backwards.

Well
Area at the rear of a boat where the motor may be located.

Wharf
A structure, parallel to the shore, for docking vessels.

Wheel
(1) The steering wheel;
(2) The propeller.

Whistle Signal
A standard communication signal between boats, to indicate change of course, danger, or other situations.

Windward
Situated on the side closest to the wind. (Opposite of leeward.)

Yaw
To swing or steer off course, as when running with a quartering sea.

WELLCRAFT ENVIROSYSTEMS

BOATS DESIGNED WITH NATURE IN MIND.

As privileged visitors to the world's oceans, lakes and waterways, we share an obligation to help protect our marine environment. Wellcraft is leading the way with a variety of unique systems designed to help minimize the impact of recreational boating.

SHARE THE FUN FOR YEARS TO COME. PRACTICE CATCH AND RELEASE.

Wellcraft®

Genmar

© Wellcraft Marine Corp., a subsidiary of Genmar Industries, Inc. 1651 Whitfield Avenue, Sarasota, FL 34243. For a complete list of standard and optional features and equipment, consult your local Wellcraft dealer. Due to a policy of continual product improvement, specifications are subject to change without notice. The weights and volumes shown are estimated and can vary from boat to boat because of equipment, etc. Wellcraft boats meet or exceed U.S. Coast Guard regulations at the date of manufacture. Wellcraft boats are NMMA Certified using ABYC standards. Wellcraft is a trademark of Genmar Industries, Inc.

Part No. 3208-5181